AV-1434EE
AV-1414EE

JVC

SERVICE MANUAL

COLOUR TELEVISION

AV-1434EE/SK
AV-1414EE/SK

BASIC CHASSIS
CG

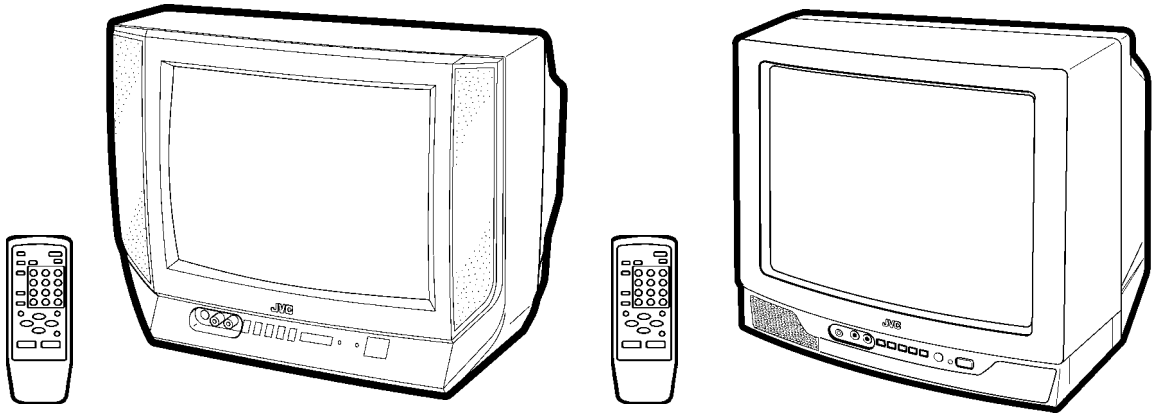

[RM-C364GY] [AV-1434EE/SK] [RM-C360GY] [AV-1414EE/SK]

CONTENTS

■ SPECIFICATIONS ····· 2
■ SAFETY PRECAUTIONS ····· 3
■ FEATURES ····· 4
■ MAIN DIFFERENCE LIST ····· 5
■ FUNCTIONS ····· 6
■ SPECIFIC SERVICE INSTRUCTIONS ····· 8
■ SERVICE ADJUSTMENTS ····· 17
■ PARTS LIST ····· 33
★ OPERATING INSTRUCTIONS
★ STANDARD CIRCUIT DIAGRAM ····· 2-1

COPYRIGHT © 2002 VICTOR COMPANY OF JAPAN, LTD.

No. 52015
Jun 2002

SPECIFICATIONS

ITEM		CONTENT	
		AV-1434EE/SK	AV-1414EE/SK
Dimensions(W×H×D)		462mm×340.5mm×375mm	364mm×333.5mm×374mm
Mass		10kg	9.3kg
TV RF System		B/G, I, D/K	←
Colour System	RF Mode	PAL / SECAM	←
	VIDEO Mode	PAL / SECAM / NTSC3.58 / NTSC4.43	←
Picture Tube		Visible size: 34cm measured diagonally	←
High Voltage		22.5kV±1.5kV(at zero beam current)	←
Receiving Frequency	VHF (VL)	43.75MHz～155.75MHz	←
	VHF (VH)	155.78MHz～466.25MHz	
	UHF	466.28MHz～864.75MHz	
	CATV	Cable TVs of Mid (X-Z, S1-S10) Super (S11-S20) & Hyper (S21-S41) bands receivable	←
Intermediate Frequency	VIF Carrier	38.0MHz	←
	SIF Carrier	32.5MHz(5.5MHz) 31.5MHz (6.5MHz) 32.0MHz (6.0MHz)	←
Colour Sub Carrier Frequency		PAL (4.43MHz), SECAM (4.40625MHz / 4.25MHz) NTSC (3.58MHz / 4.43MHz)	←
Power Input	Rated Voltage	AC220～240V, 50 / 60Hz	←
Power Consumption		68W (Max) / 47W(Avg.)	←
Speaker		5cm×9cm, Oval type×2	Φ8cm, Round type×1
Audio Output		2W (monaural)	←
Aerial Input Terminal		75Ω Unbalanced	←
Input	Video	1V(p-p), 75Ω, RCA×2 (Front / Rear)	←
	Audio	500mV(rms) (-4dBs), High impedance, RCA×2 (Front / Rear)	←
Output	Video	1V(p-p), 75Ω, RCA×1	←
	Audio	500mV(rms) (-4dBs), Low impedance, RCA×1	←
Headphone jack		3.5mm mini jack	←
Remote Control Unit		RM-C364GY (Battery size : AA / R06 / UM-3×2)	RM-C360GY (Battery size : AA / R06 / UN-3×2)

Design and specifications are subject to change without notice.

SAFETY PRECAUTIONS

1. The design of this product contains special hardware, many circuits and components specially for safety purposes. For continued protection, no changes should be made to the original design unless authorized in writing by the manufacturer. Replacement parts must be identical to those used in the original circuits. Service should be performed by qualified personnel only.

2. Alterations of the design or circuitry of the products should not be made. Any design alterations or additions will void the manufacturer's warranty and will further relieve the manufacturer of responsibility for personal injury or property damage resulting therefrom.

3. Many electrical and mechanical parts in the products have special safety-related characteristics. These characteristics are often not evident from visual inspection nor can the protection afforded by them necessarily be obtained by using replacement components rated for higher voltage, wattage, etc. Replacement parts which have these special safety characteristics are identified in the parts list of Service manual. **Electrical components having such features are identified by shading on the schematics and by (⚠) on the parts list in Service manual.** The use of a substitute replacement which does not have the same safety characteristics as the recommended replacement part shown in the parts list of Service manual may cause shock, fire, or other hazards.

4. **Don't short between the LIVE side ground and ISOLATED (NEUTRAL) side ground or EARTH side ground when repairing.**
   Some model's power circuit is partly different in the GND. The difference of the GND is shown by the LIVE : (⊥) side GND, the ISOLATED(NEUTRAL) : (⏚) side GND and EARTH : (⏚) side GND. Don't short between the LIVE side GND and ISOLATED(NEUTRAL) side GND or EARTH side GND and never measure with a measuring apparatus (oscilloscope etc.) the LIVE side GND and ISOLATED(NEUTRAL) side GND or EARTH side GND at the same time.
   If above note will not be kept, a fuse or any parts will be broken.

5. If any repair has been made to the chassis, it is recommended that the B1 setting should be checked or adjusted (See ADJUSTMENT OF B1 POWER SUPPLY).

6. The high voltage applied to the picture tube must conform with that specified in Service manual. Excessive high voltage can cause an increase in X-Ray emission, arcing and possible component damage, therefore operation under excessive high voltage conditions should be kept to a minimum, or should be prevented. If severe arcing occurs, remove the AC power immediately and determine the cause by visual inspection (incorrect installation, cracked or melted high voltage harness, poor soldering, etc.). To maintain the proper minimum level of soft X-Ray emission, components in the high voltage circuitry including the picture tube must be the exact replacements or alternatives approved by the manufacturer of the complete product.

7. Do not check high voltage by drawing an arc. Use a high voltage meter or a high voltage probe with a VTVM. Discharge the picture tube before attempting meter connection, by connecting a clip lead to the ground frame and connecting the other end of the lead through a 10kΩ 2W resistor to the anode button.

8. When service is required, observe the original lead dress. Extra precaution should be given to assure correct lead dress in the high voltage circuit area. Where a short circuit has occurred, those components that indicate evidence of overheating should be replaced. Always use the manufacturer's replacement components.

9. **Isolation Check**
   (Safety for Electrical Shock Hazard)
   After re-assembling the product, always perform an isolation check on the exposed metal parts of the cabinet (antenna terminals, video/audio input and output terminals, Control knobs, metal cabinet, screwheads, earphone jack, control shafts, etc.) to be sure the product is safe to operate without danger of electrical shock.

(1) **Dielectric Strength Test**
The isolation between the AC primary circuit and all metal parts exposed to the user, particularly any exposed metal part having a return path to the chassis should withstand a voltage of 3000V AC (r.m.s.) for a period of one second.
(. . . . Withstand a voltage of 1100V AC (r.m.s.) to an appliance rated up to 120V, and 3000V AC (r.m.s.) to an appliance rated 200V or more, for a period of one second.)
This method of test requires a test equipment not generally found in the service trade.

(2) **Leakage Current Check**
Plug the AC line cord directly into the AC outlet (do not use a line isolation transformer during this check.). Using a "Leakage Current Tester", measure the leakage current from each exposed metal part of the cabinet, particularly any exposed metal part having a return path to the chassis, to a known good earth ground (water pipe, etc.). Any leakage current must not exceed 0.5mA AC (r.m.s.).
However, in tropical area, this must not exceed 0.2mA AC (r.m.s.).

● **Alternate Check Method**
Plug the AC line cord directly into the AC outlet (do not use a line isolation transformer during this check.). Use an AC voltmeter having 1000 ohms per volt or more sensitivity in the following manner. Connect a 1500Ω 10W resistor paralleled by a 0.15μF AC-type capacitor between an exposed metal part and a known good earth ground (water pipe, etc.). Measure the AC voltage across the resistor with the AC voltmeter. Move the resistor connection to each exposed metal part, particularly any exposed metal part having a return path to the chassis, and measure the AC voltage across the resistor. Now, reverse the plug in the AC outlet and repeat each measurement. Any voltage measured must not exceed 0.75V AC (r.m.s.). This corresponds to 0.5mA AC (r.m.s.).
However, in tropical area, this must not exceed 0.3V AC (r.m.s.). This corresponds to 0.2mA AC (r.m.s.).

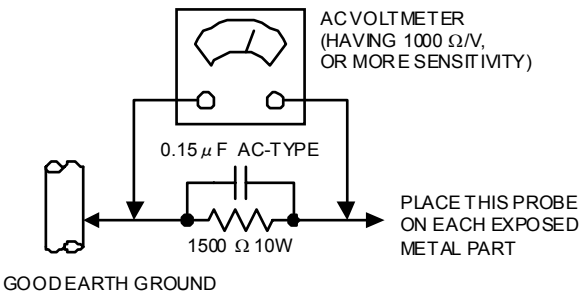

FEATURES

- New chassis design enables use of an interactive on-screen control.
- With AUDIO / VIDEO INPUT & OUTPUT terminal.
- MUTING button can reduce the audio level to zero instantly.
- Functional remote control to operate TV set (for channel select, volume control, power ON/OFF, etc.) from a distance.
- I^2C bus control utilizes single chip ICs for IF, V/C, DEF. VSM PRESET, PRESET & TURBO TIMER.
- By means of AUTO PROGRAM, the TV stations can be selected automatically and the TV channels can also be rearranged automatically.
- Built-in ECO MODE (ECONOMY, ECOLOGY) (Only for AV-1434EE/SK)
  In accordance with the brightness in a room, the brightness and / of contrast of the picture can be adjusted automatically to make the optimum picture which is easy on the eye.
- Built-in ON TIMER, RETURN + & CHILD LOCK.

SYSTEM BLOCK DIAGRAM

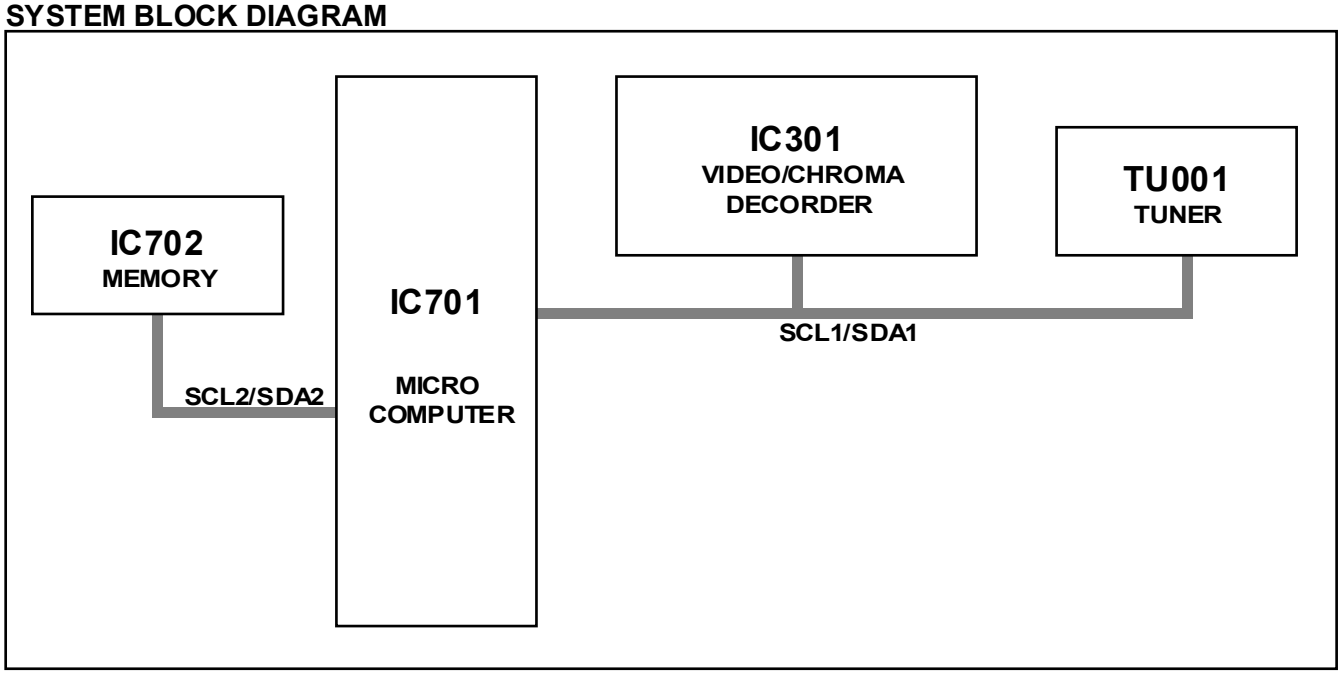

MAIN DIFFERENCE LIST

⚠	Model Name / Part Name	AV-1434EE/SK	AV-1414EE/SK
⚠	Main PWB	SCG-1313A-H2	SCG-1314A-H2
⚠	Front Cabinet	LC10831-021A-HK	LC10164-026A-HK
⚠	Speaker	QAS0054-001	QAS0016-001
	Packing Case	GG10056-045A-H	GG10056-061A-H
	Remote Control Unit	RM-C364GY-1H	RM-C360GY-1H
⚠	Rating Label	GG20014-005A-H	GG20014-007A-H
	Dimensions(W×H×D)	462mm×340.5mm×375mm	364mm×333.5mm×374mm
	Mass	10kg	9.3kg
	Speaker	5cm×9cm, Oval type×2	Φ8cm, Round type×1

FUNCTIONS

■ FRONT PANEL

AV-1434EE/SK

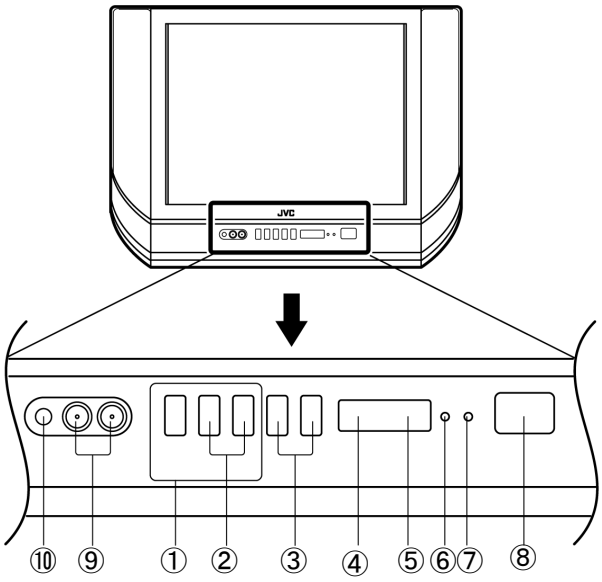

① MENU buttons
② CHANNEL −/+ buttons
③ VOLUME −/+ buttons
④ ECO sensor
⑤ REMOTE CONTROL sensor
⑥ ON TIMER lamp
⑦ POWER lamp
⑧ MAIN POWER button
⑨ A/V INPUT terminal
⑩ HEADPHONE jack

■ FRONT PANEL

AV-1414EE/SK

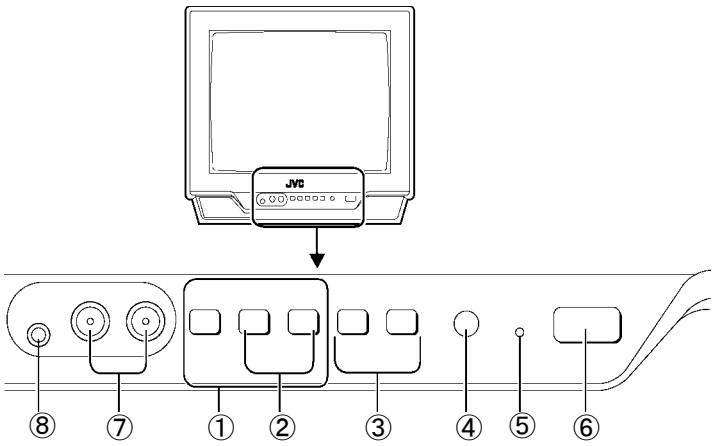

①	MENU buttons
②	CHANNEL −/+ buttons
③	VOLUME −/+ buttons
④	REMOTE CONTROL sensor
⑤	POWER / ON TIMER lamp
⑥	MAIN POWER button
⑦	A/V INPUT terminal
⑧	HEADPHONE jack

■ REAR PANEL

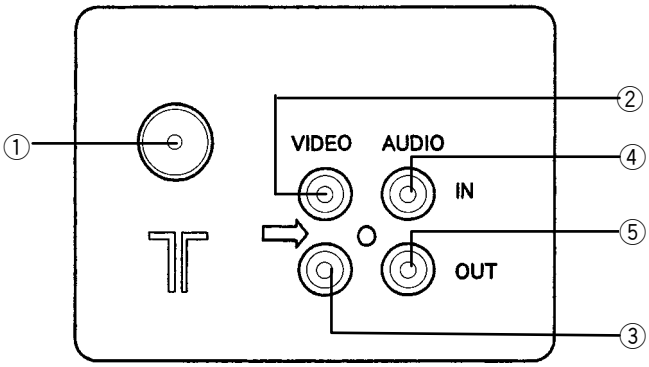

①	ANT Terminal
②	VIDEO INPUT Terminal
③	VIDEO OUTPUT Terminal
④	AUDIO INPUT Terminal
⑤	AUDIO OUT PUT Terminal

■REMOTE CONTROL UNIT

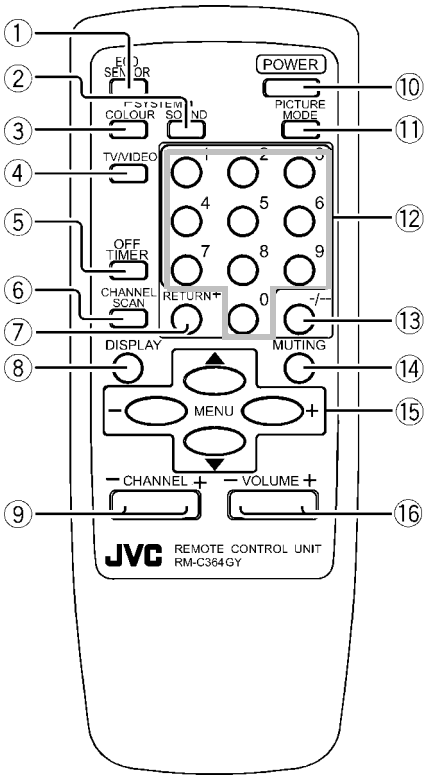

①	ECO SENSOR key (Only RM-C364GY)
②	SOUND SYSTEM key
③	COLOUR SYSTEM key
④	TV/VIDEO key
⑤	OFF TIMER key
⑥	CHANNEL SCAN key
⑦	RETURN+key
⑧	DISPLAY key
⑨	CHANNEL−/+ key
⑩	POWER key
⑪	PICTURE MODE key
⑫	Number (CH.) keys
⑬	−/−−key
⑭	MUTING key
⑮	MENU key MENU ▲/▼ key MENU −/+ key
⑯	VOLUME−/+ key

This illustration is written about RM-C364GY (AV-1434EE/SK),There are no key of ① ECO SENSOR in the RM-C360GY(AV-1414EE/SK).

SPECIFIC SERVICE INSTRUCTIONS

AV-1434EE/SK

DISASSEMBLY PROCEDURE

REMOVING THE REAR COVER

1. Unplug the power plug.
2. As shown in figure, remove the **5** screws marked Ⓐ and a screw marked Ⓑ .
3. Withdraw the rear cover toward you.

[CAUTION]

- When reinstalling the rear cover, carefully push it inward after inserting the MAIN PWB into the rear cover groove.

REMOVING THE MAIN PW BOARD

- After removing the rear cover.

1. Slightly raise the both sides of the MAIN PW BOARD by hand and remove the PWB stopper marked Ⓒ from the front cabinet.
2. Withdraw the MAIN PW BOARD backward.
   (If necessary, take off the wire clamp, connectors etc.)

REMOVING THE SPEAKER

- After removing the rear cover.

1. As shown in figure, remove the **2** screws marked Ⓓ .
2. Follow the same steps when removing the other hand speaker.

CHECKING THE MAIN PW BOARD

1. To check the back side of the PW Board.
   1) Pull out the MAIN PW Board. (Refer to REMOVING THE MAIN PW Board)
   2) Erect the PW Board vertically so that you can easily check the back side of the PW Board.

[CAUTION]

- When erecting the PW Board, be careful so that there will be no contacting with other PW Board.
- Before turning on power, make sure that the CRT earth wire and other connector are properly connected.

WIRE CLAMPING AND CABLE TYING

1. Be sure to clamp the wire.
2. Never remove the cable tie used for tying the wires together.
   Should it be inadvertently removed, be sure to tie the wires with a new cable tie.

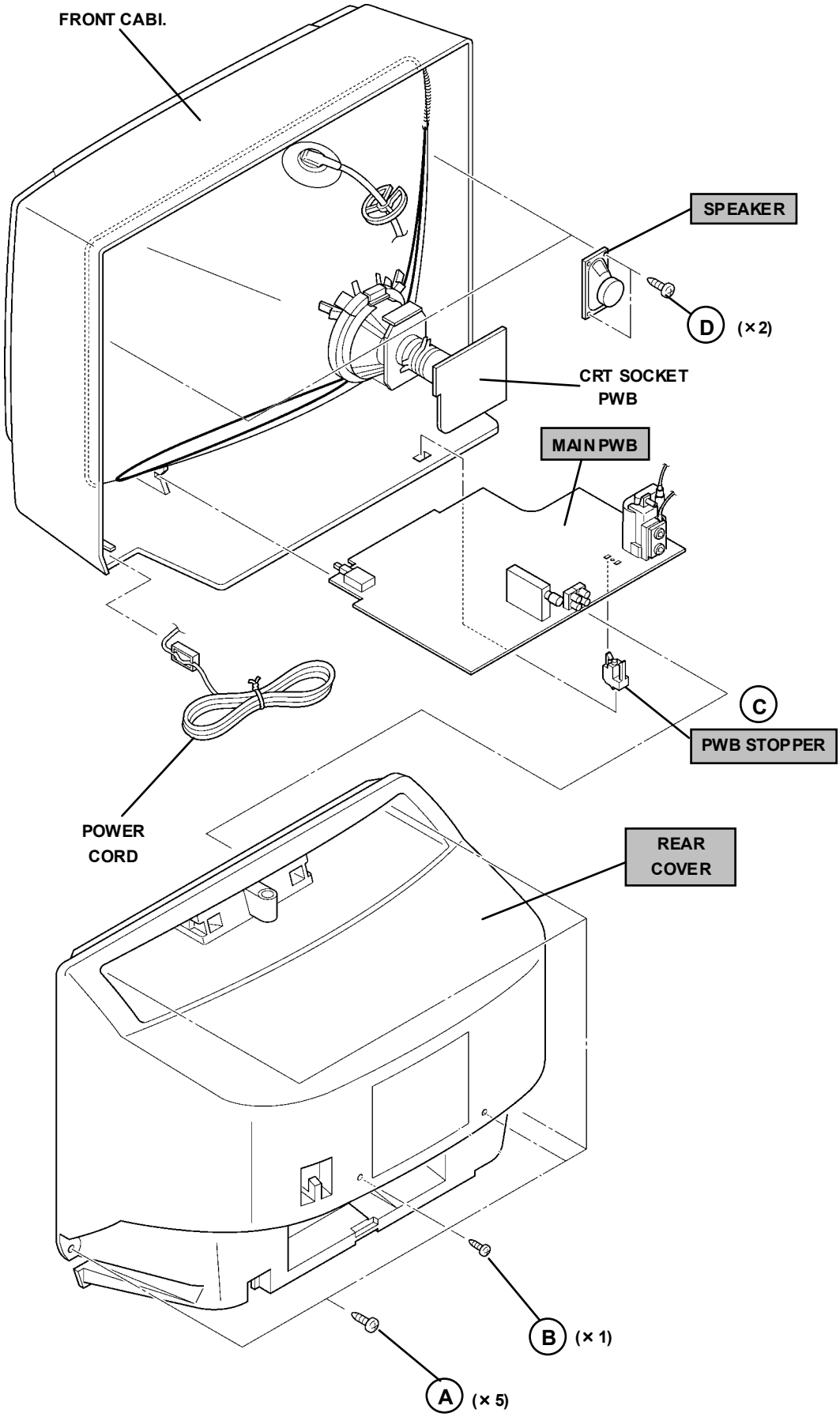
FRONT CABI.
SPEAKER
D (×2)
CRT SOCKET PWB
MAIN PWB
C
PWB STOPPER
POWER CORD
REAR COVER
B (×1)
A (×5)

AV-1414EE/SK

DISASSEMBLY PROCEDURE

REMOVING THE REAR COVER

1. Unplug the power plug.
2. As shown in figure, remove the **5** screws marked Ⓐ and a screw marked Ⓑ .
3. Withdraw the rear cover toward you.

[CAUTION]

- When reinstalling the rear cover, carefully push it inward after inserting the MAIN PWB into the rear cover groove.

REMOVING THE MAIN PW BOARD

- After removing the rear cover.

1. Slightly raise the both sides of the MAIN PW BOARD by hand and remove the PWB stopper marked Ⓒ from the front cabinet.
2. Withdraw the MAIN PW BOARD backward.
   (If necessary, take off the wire clamp, connectors etc.)

REMOVING THE SPEAKER

- After removing the rear cover.

1. By holding up the SPEAKER HOLDER marked Ⓓ slightly and unlocking the claw, the SPEAKER HOLDER can be removed. Then you can remove the SPEAKER.

CHECKING THE MAIN PW BOARD

1. To check the back side of the PW Board.
   1) Pull out the MAIN PW Board. (Refer to REMOVING THE MAIN PW Board)
   2) Erect the PW Board vertically so that you can easily check the back side of the PW Board.

[CAUTION]

- When erecting the PW Board, be careful so that there will be no contacting with other PW Board.
- Before turning on power, make sure that the CRT earth wire and other connector are properly connected.

WIRE CLAMPING AND CABLE TYING

1. Be sure to clamp the wire.
2. Never remove the cable tie used for tying the wires together.
   Should it be inadvertently removed, be sure to tie the wires with a new cable tie.

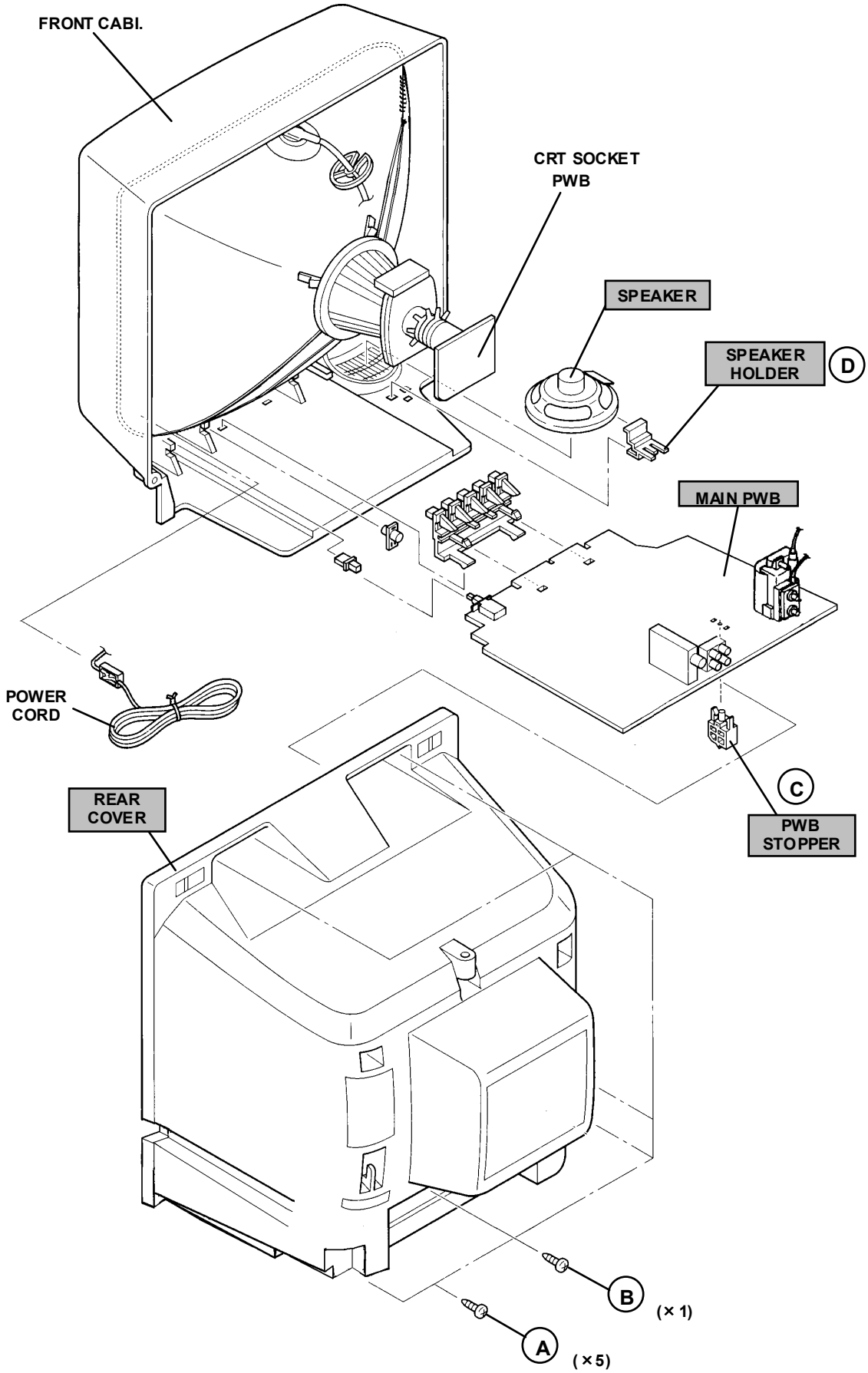
FRONT CABI.
CRT SOCKET PWB
SPEAKER
SPEAKER HOLDER
D
MAIN PWB
POWER CORD
C
PWB STOPPER
REAR COVER
B
(× 1)
A
(× 5)

REPLACEMENT OF MEMORY ICs

1. MEMORY ICs

This model uses memory ICs. This memory IC data are for proper operation of the video and deflection circuits.
When replacing memory ICs, be sure to use ICs written with the initial values of data.

2. PROCEDURE FOR REPLACING MEMORY ICs

(1) Power off
Switch the power off and disconnect the power plug from the wall outlet.

(2) Replace ICs
Be sure to use memory ICs written with the initial data values.

(3) Power on
Connect the power plug into the wall outlet and switch the power on.

(4) Check and set SYSTEM CONSTANT SET

- **It must not adjust without adjustment signals.**

1) Press the **DISPLAY** key and the **PICTURE MODE** key of the REMOTE CONTROL UNIT simultaneously.
2) The SERVICE MENU screen of Fig. 1 will be displayed.
3) While the SERVICE MENU is displayed, again press the **DISPLAY** key and **PICTURE MODE** key simultaneously, and the SYSTEM CONSTANT SET screen of Fig. 2 will be displayed.
0) Check the setting values of the SYSTEM CONSTANT SET of Table 1 If the value is different, select the setting item with the **MENU** ▼/▲key, and set the correct value with the **MENU** - / + key.
5) Press the **DISPLAY** key twice, and return to the normal screen.

(5) Receive channel of setting
Refer to the **OPERATING INSTRUCTIONS** and set the receive channels (channels preset) as described

(6) User Setting
Check the user setting value of Table 2, and if setting value is different, set the correct value.
For setting, refer to the **OPERATING INSTRUCTIONS**.

(7) Setting of SERVICE MENU
Verify the setting items of the SERVICE MENU, and reset where necessary.
For setting, refer to the **SERVICE ADJUSTMENTS**.

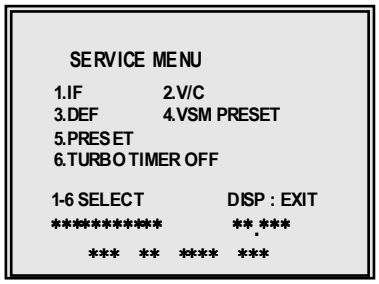

Fig.1

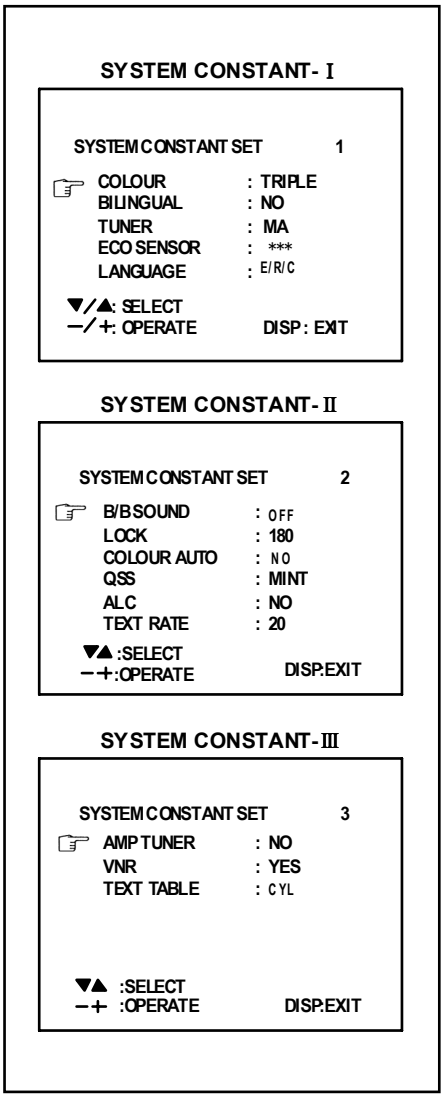

Fig.2

KEY ASSIGNMENT OF REMOTE CONTROL UNIT

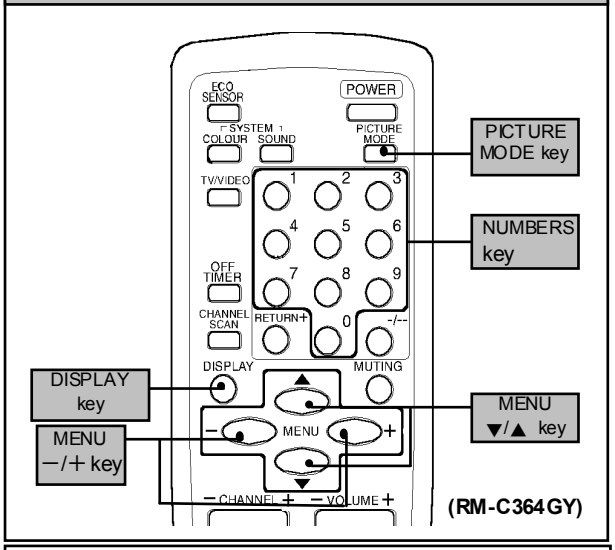

Although this illustration of remote control unit is written about RM-C364GY (AV-1434EE/SK),it can use for operating RM-C360GY (AV-1414EE/SK) as same key assignment.

SETTING OF SYSTEM CONSTANT SET

Setting item	Setting contents	Setting value	
		AV-1434 EE/SK	AV-1414 EE/SK
COLOUR	→ MULTI. → TRIPLE → PAL →	TRIPLE	←
BILINGUAL	→ YES → NO →	NO	←
TUNER	→ MU → MA →	MA	←
ECO SENSOR	→ YES → NO →	YES	NO
LANGUAGE	→ E/R/A/F → E/R/C → E/R/U → E/F →	E/R/C	←
B/B SOUND	→ ON → OFF →	OFF	←
LOCK	YES ↔ 10 ↔ 20 ↔ ~ ↔ 230 ↔ 250 ↔ 240 ↔	180	←
COLOUR AUTO	→ YES → NO →	NO	←
QSS	→ MINT → MQSS →	MINT	←
ALC	→ YES → NO →	NO	←
TEXT RATE	10 ↔ 20 ↔ 40 ↔ 80	20	←
AMP TUNER	→ YES → NO →	NO	←
VNR	→ YES → NO →	YES	←
TEXT TABLE	→ ARA → CYL →	CYL	←

Table 1

USER SETTING VALUES

Setting item	Setting value	Setting item	Setting value
SUB POWER	ON	LANGUAGE	ENGLISH
CHANNEL POSITION	1 POSITION	CHANNEL PRESET	Refer to OPERATING INSTRUCTION
VOLUME	About 10	ECO SENSOR	OFF (Only for AV-1434EE/SK)
TV/VIDEO	TV	VNR	OFF
ON SCREEN DISPLAY	POSITION INDICATION	AUTO SHUTOFF	OFF
COLOUR SYSTEM	PAL	ON TIMER	PR1 0:00
SOUND SYSTEM	B / G	BLUE BACK	OFF
OFF TIMER	OFF OSD. Shows 00	CHILD LOCK	OFF
PICTURE MODE (VSM)	BRIGHT		

Table 2

INITIAL SETTING VALUE OF SERVICE MENU

1. Adjustment of the SERVICE MENU is made on the basis of the initial setting values ; however, the new setting values which set the screen in its optimum condition may differ from the initial setting.
2. Do not change the initial Setting Values of the Setting (Adjustment) items not listed In "ADJUSTMENT".

2. V/C

Setting item \ Colour system		Variable range	Initial setting value			
			PAL	SECAM	NTSC 3.58	NTSC 4.43
1. CUT OFF	RED	-128～+127	-50	←	←	←
	GREEN					
	BLUE					
2. DRIVE	RED	-128～+127	+ 0	←	←	←
	BLUE					
3. BRIGHT		-127～+127	+ 0	←	←	←
4. CONT.		-63～+63	+ 0	←	←	←
5. COLOUR		-63～+63	+ 0	←	←	←
6. TINT	TV	-63～+63	—	—	+ 0	+ 0
	VIDEO		—	—	+ 0	+ 0
7. SECAM BL ADJ.		-31～+31	+ 0	←	←	←
8. SHARP Do Not Adj.	TV AV-1434EE	-32～+31	- 12(Fixed)	←	←	←
	TV AV-1414EE		- 17(Fixed)			
	VIDEO		+10(Fixed)			

3. DEFLECTION

Setting item	Variable range	Initial setting value			
		fv : 50Hz MODE		fv : 60Hz MODE	
		AV-1434EE/SK	AV-1414EE/SK	AV-1434EE/SK	AV-1414EE/SK
1. VER. POSITION	-04 ～ +03	- 2	0	- 3	←
2. HOR. POSITION	-16 ～ +15	+1	←	+ 4	←
3. VER. HEIGHT	-64 ～ +63	-40	-20	+ 0	-2
4. VER. LINEARITY	-32 ～ +31	+13	+15	- 3	+0
5. VER. SCURVE	-32 ～ +31	-32	←	+ 0	←
6. HOR. VCO ADJUST Do Not Adj.	-63 ～ +62	+ 0	←	+ 0	←

4.VSM PRESET

VSM Setting item \ VSM preset mode	BRIGHT	STANDARD	SOFT
TINT SETTING VALUE	+15	←	←
COLOUR SETTING VALUE	+15	←	←
BRIGHT SETTING VALUE	+15	←	←
CONT. SETTING VALUE	+30	+15	+11
SHARP SETTING VALUE	+15	←	+12

5. PRESET

The items in the following table, it is no requirement for adjustment.
If values had changed by the miss operation, set the initial setting values in the following table.

Colour System **Do Not Adjust**

Setting item		Initial setting value (Fixed value)			
		PAL	SECAM	NTSC 3.58	NTSC 4.43
1. C TRAP FIX		1	1	1	1
2. SHARP PEAK		0	0	0	0
3. ABL		1	1	1	1
4. GAMMA		0	0	0	0
5. Y. DELAY TIME	TV	0	2	2	3
	VIDEO	0	2	0	2
6. BLACK EXP START		+3	+3	+3	+3
7. C-BPF	TV	1	1	0	0
	VIDEO	1	1	1	1
8. CW / SCP		0	0	0	0
9. VIF DET LEVEL		0	0	0	0
11. IF AGC MIN		0	0	0	0
12. VIF AGC		0	0	0	0
13. VIF PMOD		0	0	0	0
19. VNR		15	15	15	15
20. RGB LIM		1	1	1	1
21. RGB LIMIT LEVEL		2	2	2	2
23. TEXT H. POSITION		-3	-3	-3	-3
24. READ DATA		———	———	———	———

Sound System **Do Not Adjust**

Setting item	B/G	I	D/K	M
10. SIF DET LEVEL	+0	+0	+0	+0
14. SIF BPF BW ADJUST	+0	+0	+0	+0
15. SIF TRAP FO ADJUST	+0	+0	+0	+0
16. SIF TRAP FO ADJUST 2	+0	+0	+0	+0
17. SIF -TRAP	0	0	0	0
18. SIF -BPF	0	0	0	1
22. SIF SW	1	1	1	0

REPLACEMENT OF IC301 (IF V/C DECODER)

- **For the IC301(IF V/C DECODER) of this model, all data are written in the micro-computer. So, write the data in the micro-computer in accordance with the following procedures before starting adjustment.**

REPLACING PROCEDURES

(1) Turn the POWER OFF.

(2) Replace the IC301 with a new one.

(3) While pressing MENU button and VOL+ button ON the FRONT CABINET simultaneously, turn the POWER ON. When the POWER is turned ON, the data is written in the micro-computer immediately.

LOCATIONS OF FRONT PANEL BUTTONS AND LAMPS

AV-1434EE/SK

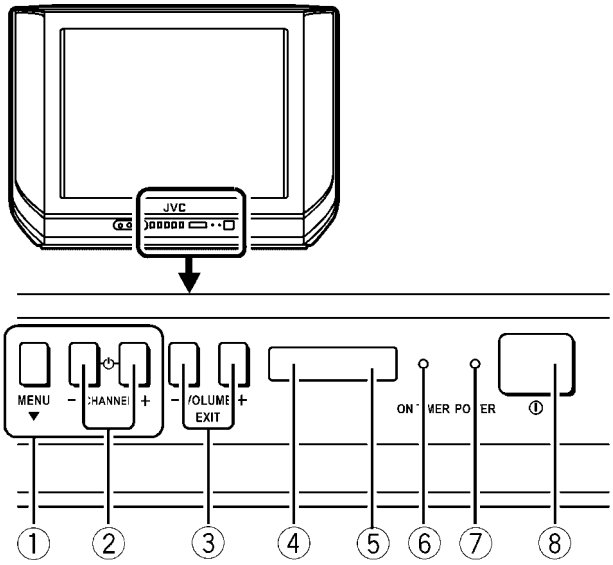

①	MENU buttons
②	CHANNEL −/+ buttons (MENU −/+ buttons)
③	VOLUME −/+ buttons (MENU −/+ buttons)
④	ECO sensor
⑤	REMOTE CONTROL sensor
⑥	ON TIMER lamp
⑦	POWER lamp
⑧	MAIN POWER button

AV-1414EE/SK

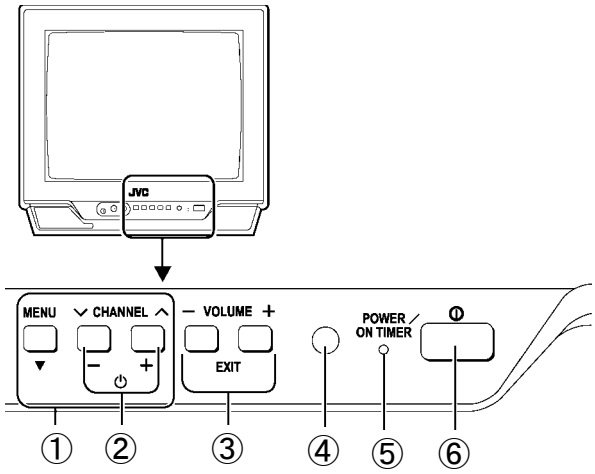

①	MENU buttons
②	CHANNEL −/+ buttons (MENU −/+ buttons)
③	VOLUME −/+ buttons (MENU −/+ buttons)
④	REMOTE CONTROL sensor
⑤	POWER / ON TIMER lamp
⑥	POWER lamp

SERVICE ADJUSTMENT

BEFORE STARTING SERVICE ADJUSTMENT

1. **There are 2 way of adjusting this TV: One is with the REMOTE CONTROL UNIT and the other is the conventional method using adjustment parts and components.**
2. **The adjustment with the REMOTE CONTROL UNIT is made on the basis of the initial setting values. The setting values which adjust the screen to its optimum condition may differ from the initial setting values.**
3. Make sure that connection is correctly made to AC power source.
4. Turn on the power of the set and equipment before use, and start the adjustment procedures after waiting at least 30 minutes.
5. Unless otherwise specified, prepare the most suitable reception or input signal for adjustment.
6. **Never touch any adjustment parts, which are not specified in the list for this adjustment VRs, transforms, condensers, etc.**
7. Preparation for adjustment
   Unless otherwise specified in the adjustment instructions, preset the following functions with the REMOTE CONTROL UNIT.
   User mode preset value

MENU ITEM	PRESET VALUE
PICTURE MODE (VSM)	BRIGHT
VNR	OFF
TINT / COLOUR / BRIGHT CONT. / SHARP	CENTER
BLUE BACK	OFF
OFF TIMER	OFF
ECO SENSOR	OFF (Only for AV1434EE/SK)
AUTO SHUT OFF	OFF

MEASURING INSTRUMENT AND FIXTURES

1. DC voltmeter (or digital voltmeter)
2. Oscilloscope
3. Signal generator (Pattern generator) [PAL / SECAM / NTSC]
4. Remote control unit

ADJUSTMENT ITEMS

Adjustment item	Adjustment item
B1 POWER SUPPLY	DEFLECTION circuit adjustment
FOCUS adjustment	VSM PRESET setting
IF circuit adjustment	
V/C (Video / Chroma) circuit adjustment	

BASIC OPERATION OF SERVICE MENU

- **The adjustment using SERVICE MENU**

The following adjustment items use the SERVICE MENU in the series of the adjustment. The adjustments are made on the basis of the initial setting values. The adjustment values which adjust the screen to the optimum condition can be different from the initial setting values.
With the SERVICE MENU, various settings can be made, and they are broadly classified in the following items of settings.

1.IF ····· Adjustment of the IF circuits.
2.V/C ····· Adjustment of the VIDEO/CHROMA circuit.
3.DEF ····· Adjustment of the DEFLECTION circuit.
4.VSM PRESET ····· Adjustment of the initial setting values of VSM condition as STANDARD, SOFT and BRIGHT. (VSM : Video Status Memory)
5.PRESET ····· Adjustment of the RF circuit **[Do not adjust]**.
6.TURBO TIMER····· For quick setting the TIMER count value, adjustable not only by minuets but also by second. **[Should be OFF]**.

- **Key operation of the SERVICE MENU**

[Enter to SERVICE MENU]

Press the **DISPLAY** key and the **PICTURE MODE** key of the REMOTE CONTROL UNIT simultaneously. Then enter the SERVICE MENU mode as shown in Fig.1.

[Exit from SERVICE MENU]

When complete the adjustment work, press the **DISPLAY** key to return to the SERVICE MENU.
And then press the **DISPLAY** key again, return to the normal screen.

[Select from SERVICE MENU]

In SERVICE MENU, press the number (1～6) key of the remote control unit, to select any of the adjustment items.
The colours which selected item characters are changed.

SERVICE MENU

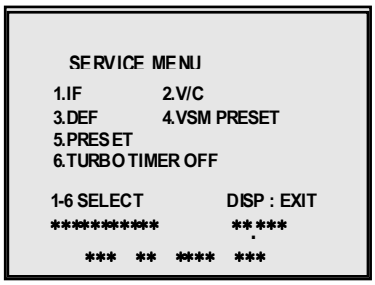

Fig.1

KEY ASSIGNMENT OF REMOTE CONTROL UNIT

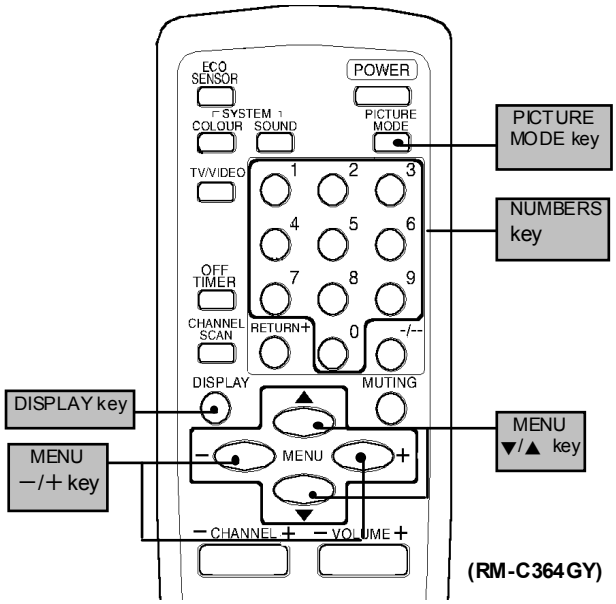

Although this illustration of remote control unit is written about RM-C364GY (AV-1434EE/SK),it can use for operating RM-C360GY (AV-1414EE/SK) as same key assignment.

[Method of setting]

1. IF

[1. VCO]

① 1 Key ····· Select **1.IF**.

② 1 Key ····· Select **1.VCO**

③ The VCO (CW) screen will be displayed a allow mark when the AFC voltage is at a certain level.

④ DISPLAY Key ····· As you press this key twice, you will return to the **SERVICE MENU**.

[2. DELAY POINT]

① 1 Key ····· Select **1.IF**.

② 2 Key ····· Select **2.DELAY POINT**.

③ MENU -/+ key ····· Set (adjust) the setting values of the setting items.

④ DISPLAY Key ····· When this is pressed twice, you will return to the **SERVICE MENU**.

2.V/C, 3.DEF and **4.VSM PRESET**

① 2~4 Key ····· Select one from **2. V/C, 3. DEF** and **4. VSM PRESET**.

② MENU ▼/▲ Key ····· Select setting items.

③ MENU -/+ Key ····· Adjust the values of the items.

④ DISPLAY Key ····· When this is pressed twice, return to the **SERVICE MENU**.

6.TURBO TIMER

① By pressing the 6 key, you can change the ON or OFF (**should be OFF**).

(Should be OFF)

* If it is ON, the timer in TIMER mode changes from 1 minute into 1 sec temporarily.
(It is easier to checks the Operation of TIMER)
If you turn the TV power off, this setting becomes OFF automatically.

SERVICE MENU FLOW CHART

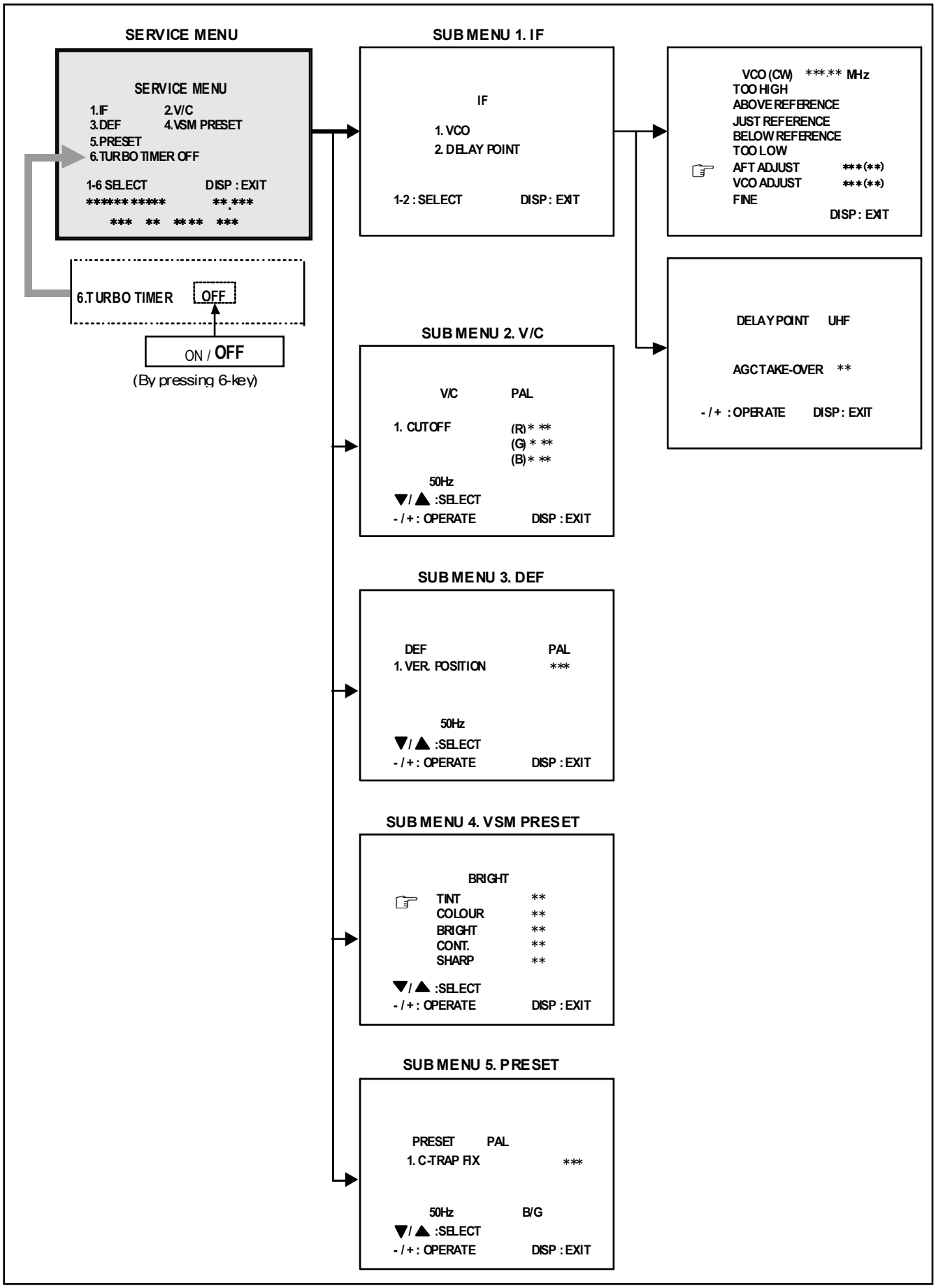

ADJUSTMENT LOCATIONS

CRT SOCKET PWB (SOLDER SIDE)

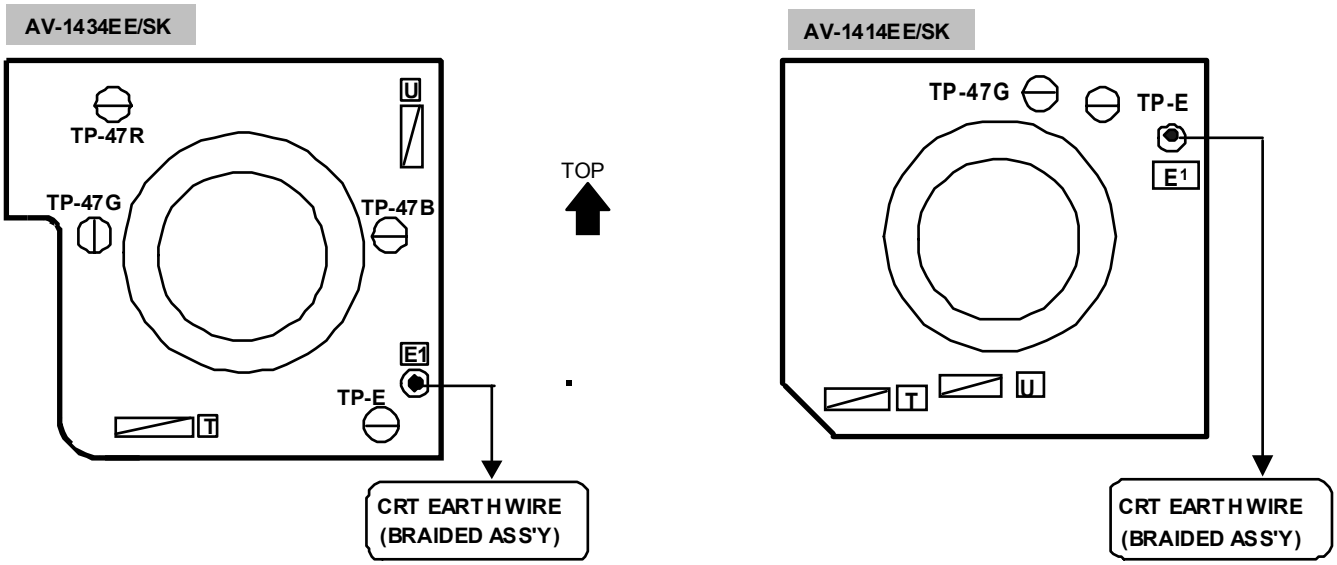

MAIN PWB

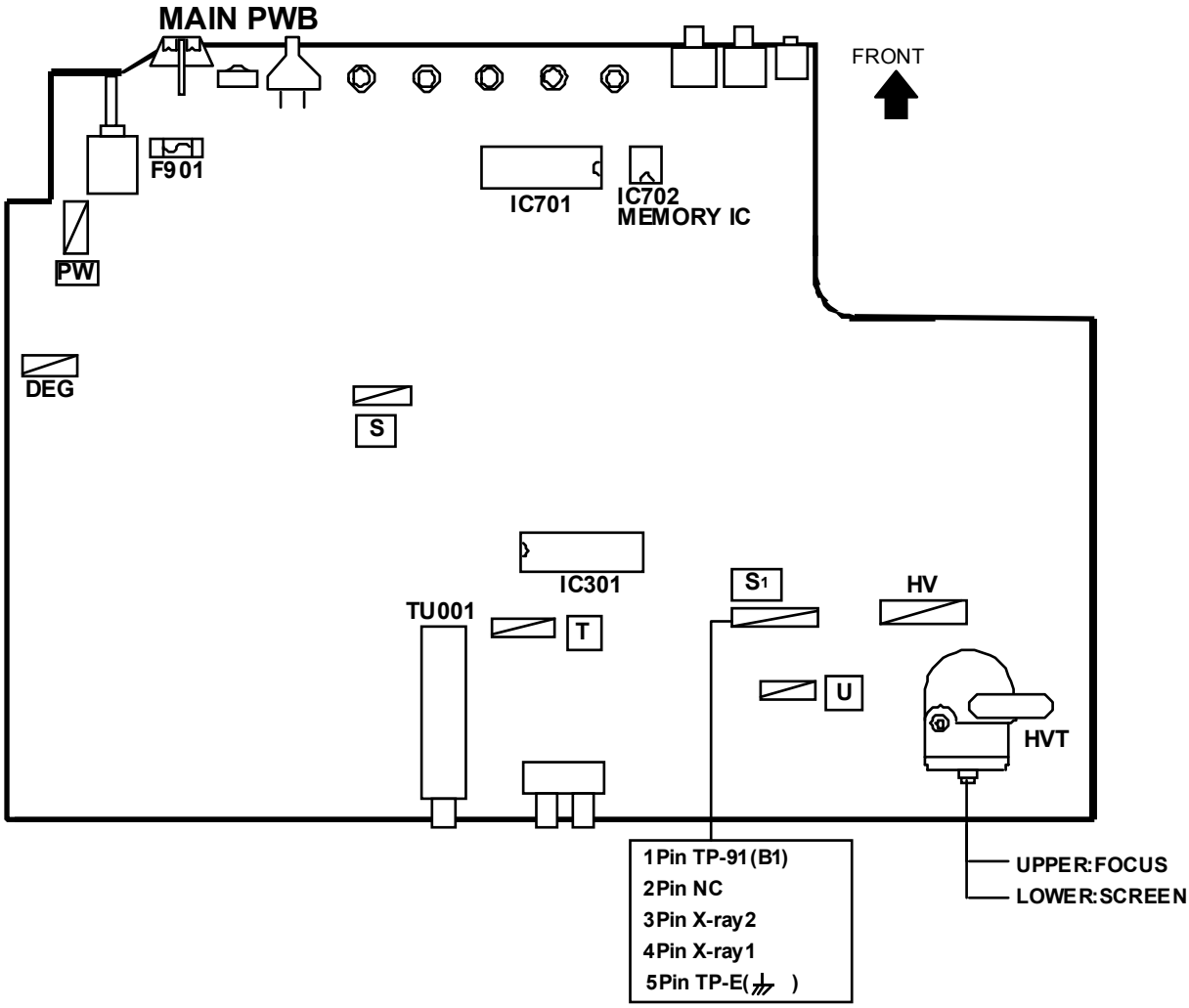

ADJUSTMENTS

B1 POWER SUPPLY

Item	Measuring instrument	Test point	Adjustment part	Description
Check of B1 Power Supply	**Signal generator** **DC Volt-meter**	**TP-91 (B1)** **TP-E (⏚)**		1. Input a whole black signal. 2. Connect a DC voltmeter to TP-91(B1) and TP-E (⏚). 3. Make sure that the voltage is DC114.5± 1.5V.

FOCUS ADJUSTMENT

Item	Measuring instrument	Test point	Adjustment part	Description
Adjustment of FOCUS	**Signal generator**		**FOCUS VR** **[In HVT]**	1. Input a cross-hatch signal. 2. While watching the screen, adjust the FOCUS VR to make the vertical and horizontal lines as fine and sharp as possible. 3. Make sure that when the screen is darkened, the lines remain in good focus.

IF CIRCUIT ADJUSTMENT

Item	Measuring instrument	Test point	Adjustment part	Description
Adjustment of VCO(CW)	**Signal generator** **Remote control unit**		**1. VCO**	●Please use signal generator which is correct proof about the sending frequency. 1. Input the PAL full colour bar (210.25MHz) signal. 2. Select 1.IF from the **SERVICE MENU**. 3. Press 1 key and select **1.VCO**. 4. Select **VCO ADJUST** with **MENU** ▲/▼ key. 5. Press **MENU** - / + key until the colour of the characters TOO HIGH changes blue to yellow. Then gradually press the **MENU** -/+ key until the TOO LOW changes yellow. At this time, confirm that the value of **VCO ADJUST** is near +00. 6. Select **AFT ADJUST** with **MENU** ▲/▼ key. 7. Press **MENU** - / + key until the characters JUST REFERENCE changes blue to yellow. 8. Press the **DISPLAY** key three times to return to normal screen.

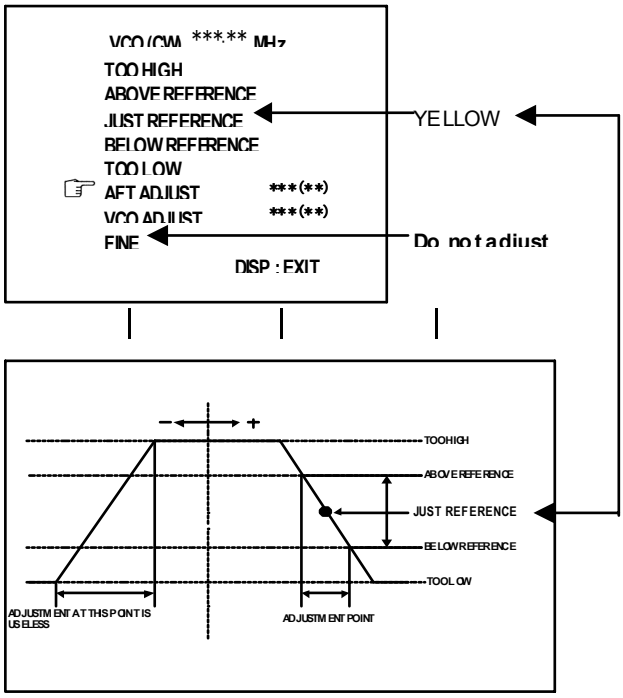

Item	Measuring instrument	Test point	Adjustment part	Description
Adjustment of DELAY POINT (AGC)	**Signal generator** **Remote control unit**		**DELAY POINT** **(AGC TAKE-OVER)**	1. Input a black and white signal (colour off). 2. Select **1. IF** from the SERVICE MENU. 3. Select **2. DELAY POINT** by pressing the **2** key on the remote control unit. 4. Set the setting values of the setting items as shown bellow table. 5. Then adjust the MENU - / + key until video noise disappears. 6. Turn to other channels and make sure that there are no irregularities.

DELAY POINT UHF

AGC TAKE-OVER **

- / + : OPERATE DISP : EXIT

Setting Item		Variable range	Initial setting value
DELAY POINT (AGC TAKE OVER)	**NTSC 3.58**	0～127	48
	OTHER		43

VIDEO / CHROMA CIRCUIT ADJUSTMENT

The setting (adjustment) using the REMOTE CONTROL UNIT is made on the basis of the initial setting values.
The setting values which adjust the screen to the optimum condition can be different from the initial setting values.
Do not change the initial setting values of the setting items not listed in "ADJUSTMENT".

Item	Measuring instrument	Test point	Adjustment part	Description
Adjustment of WHITE BALANCE (Low light)	**Signal generator** **Remote control unit**		**1. CUT OFF (R)** **CUT OFF (G)** **CUT OFF (B)** **SCREEN VR [IN HVT]**	1. Input a black and white signal (colour off). 2. Select **2. V/C** from the SERVICE MENU, then select **1. CUT OFF** (R), (G) and (B) . 3. Set each value to initial setting value with 4～9 keys of the remote control unit. 4. Press the **1** key of the remote control unit to show the single horizontal line on screen. 5. Turn the **SCREEN VR** fully counter-clockwise, then slowly turn it clockwise to where one of a red, blue or green colour is faintly visible. 6. Use keys **4～9** of the remote control unit and adjust the other 2 colours which except the appeared colour to where the single horizontal line appears white. 7. Turn the **SCREEN VR** to where the single horizontal line glows faintly. 8. Press the **2** key to turn off the single horizontal line. 9. Press the **DISPLAY** key twice to return to the normal screen.
Adjustment of WHITE BALANCE (High light)	**Signal generator** **Remote control unit**		**2. DRIVE (R)** **DRIVE (B)**	1. Input a black and white signal (colour off). 2. Select **2. V/C** from the SERVICE MENU. 3. Select **2. DRIVE (R) / (B)** with MENU ▼/▲ key, and set each value to initial setting value with 4 and 7 or 6 and 9 keys of the remote control unit. 4. Use the keys **4** and **7** or **6** and **9** to produce a white screen 5. Press the **DISPLAY** key twice to return to the nomal screen.

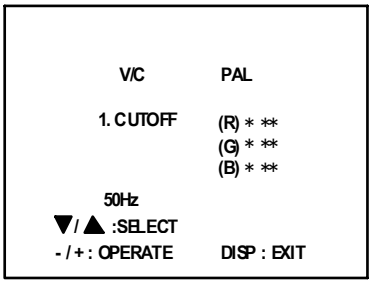

KEY ASSIGNMENT OF REMOTE CONTROL UNIT

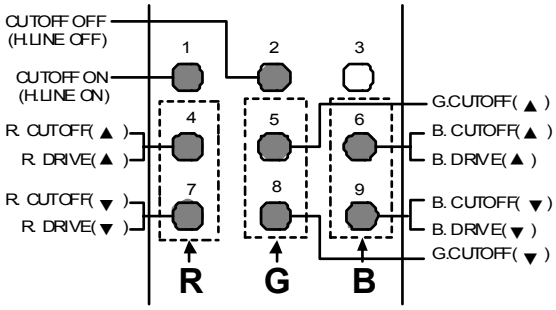

Adjustment item		Variable range	Initial setting value
1. CUT OFF	R	-128～+127	-50
	G	-128～+127	-50
	B	-128～+127	-50

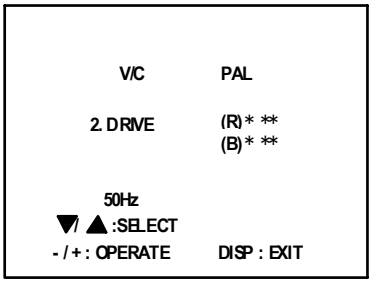

Adjustment item		Variable range	Initial setting value
2. DRIVE	R	-128～+127	+0
	B	-128～+127	+0

Item	Measuring instrument	Test point	Adjustment part	Description
Adjustment of SUB BRIGHT	**Remote control unit**		**3. BRIGHT**	1. Receive any broadcast. 2. Select **2. V/C** from SERVICE MENU. 3. Select **3. BRIGHT** with the MENU ▼/▲key. 4. Set the initial setting value with the MENU - / + key. 5. If the brightness is not the best with the initial set value, make fine adjustment until you get the best brightness.
Adjustment of SUB CONT.	**Remote control unit**		**4. CONT.**	1. Receive any broadcast. 2. Select **2. V/C** from SERVICE MENU. 3. Select **4. CONT**. with the MENU ▼/▲key. 4. Set the initial setting value with the MENU - / + key. 5. If the contrast is not the best with the initial set value, make fine adjustment until you get the best contrast.
Adjustment of SUB COLOUR I	**Remote control unit**		**5. COLOUR**	**[Method of adjustment without measuring instrument]**
			PAL COLOUR	1. Receive a PAL broadcast. 2. Select **2. V/C** from the SERVICE MENU. 3. Select **5. COLOUR** with the MENU ▼/▲ key. 4. Set the initial setting value for PAL COLOUR with the MENU - / + key. 5. If the colour is not the best with the initial set value, make fine adjustment until you get the best colour.
			SECAM COLOUR	1. Receive a SECAM broadcast. 2. Make fine adjustment of SECAM COLOUR as previously.
			NTSC 3.58 COLOUR	1. Receive a NTSC 3.58MHz broadcast. 2. Make similar fine adjustment of NTSC 3.58 COLOUR as previously.
			NTSC 4.43 COLOUR	When NTSC 3.58 adjustment completed, NTSC 4.43 will be automatically set at the respective values.

Item	Measuring instrument	Test point	Adjustment part	Description
Adjustment of SUB COLOUR Ⅱ	**Signal generator** **Oscillo-scope** **Remote control unit**	**TP-47R/G** **TP-E (⏚)** **[CRT SOCKET PWB]**	**5. COLOUR**	**[Method of adjustment using measuring instrument]**
				1. Input a PAL full field colour bar signal (75% white). 2. Select **2. V/C** from SERVICE MENU. 3. Select **5. COLOUR** with the MENU ▼/▲ key. 4. Set the initial setting value of PAL COLOUR with the MENU - / + key. 5. Connect the oscilloscope between TP-47R/G and TP-E. 6. Adjust PAL COLOUR to bring the value of **(A)** in the illustration to **+9V** (W-G). (Voltage value between (**W**) and (**G**))
			SECAM COLOUR	1. Input a SECAM full field colour bar signal (75% white). 2. Set the initial setting value of SECAM COLOUR with the MENU - / + key. 3. Adjust SECAM COLOUR to bring the value of **(A)** in the illustration to **+3V** (W-G). (Voltage value between (**W**) and (**G**))
			NTSC 3.58 COLOUR	1. Input a NTSC 3.58 full field colour bar signal (75% white). 2. Set the initial setting value of NTSC 3.58 COLOUR with the MENU -/+ key. 3. Adjust NTSC 3.58 COLOUR to bring the value of **(A)** in the illustration to **+6V** (W-G). (Voltage value between (**W**) and (**G**))
			NTSC 4.43 COLOUR	When NTSC 3.58 is set, NTSC 4.43 will be automatically set at the respective values.

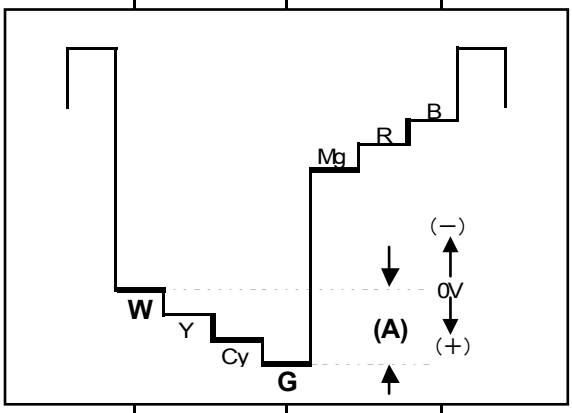

Item	Measuring instrument	Test point	Adjustment part	Description
Adjustment of TINT Ⅰ	**Signal generator** **Remote control unit**		**6. TINT**	**[Method of adjustment without measuring instrument]**
			NTSC 3.58 TINT	1. Input a NTSC 3.58 full field colour bar signal (75% white). 2. Select **2. V/C** from SERVICE MENU. 3. Select **6. TINT** with the MENU ▼/▲ key. 4. Set the initial setting value of NTSC 3.58 with the MENU - / + key. 5. If you cannot get the best tint with the initial setting value, make fine adjustment until you get the best tint.
			NTSC 4.43 TINT	When NTSC 3.58 is set, NTSC 4.43 will be automatically set at the respective values.
Adjustment of TINT Ⅱ	**Signal generator** **Oscillo-scope** **Remote control unit**	**TP-47R/G** **TP-E (⏚)** **[CRT SOCKET PWB]**	**6. TINT**	**[Method of adjustment using measuring instrument]**
			NTSC 3.58 TINT	1. Input a NTSC 3.58 full field colour bar signal (75% white). 2. Select **2. V/C** from SERVICE MENU. 3. Select **6. TINT** with the MENU ▼/▲ key. 4. Set the initial setting value of NTSC 3.58 with the MENU - / +key. 5. Connect the oscilloscope between TP-47R/G and TP-E. 6. Adjust NTSC 3.58 TINT to bring the value of **(B)** in the illustration to **+6V** (W-Cy). (Voltage value between (**W**) and **Cy**))
			NTSC 4.43 TINT	When NTSC 3.58 is set, NTSC 4.43 will be automatically set at the respective values.

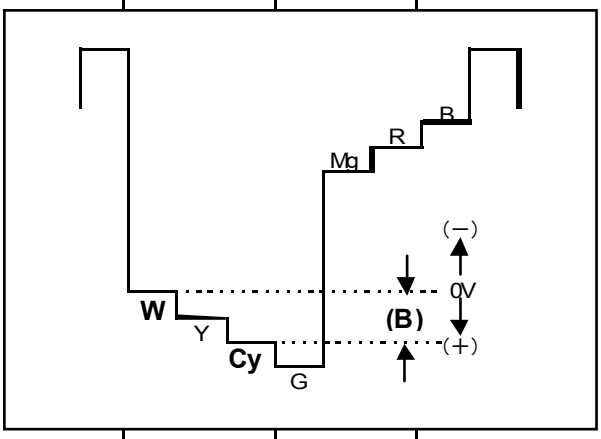

Item	Measuring instrument	Test point	Adjustment part	Description
Adjustment of SECAM BLACK OFFSET	**Remote control unit** **Signal generator**		**7.SECAM BL ADJUST**	**[Method of adjustment using measuring instrument]** 1. Receive a SECAM full field colour bar signal. 2. Select **2. V/C** from SERVICE MENU. 3. Select **7. SECAM BL ADJUST** with MENU ▼/▲ key. 4. Set the initial setting value with the MENU - / + key. 5. Switch the ①key (colour OFF) and ②key (colour ON) on the remote control and make sure that there is no colour on the black and white screen. 6. If the black and white screen is not best with the initial setting value, make fine adjustment until you get the best black and white screen. 7. While watching the screen, adjust the value to be the same colour between ON & OFF by Ten key on the remote control unit. 8. Press the DISPLAY key twice to return to the normal screen.

KEY ASSIGNMENT OF REMOTE CONTROL UNIT

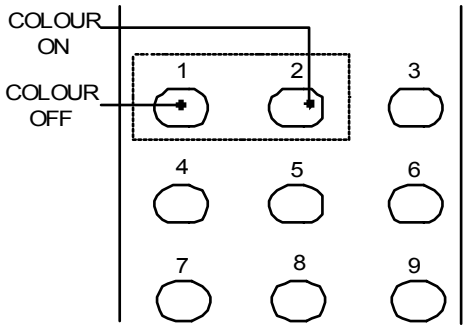

DEFLECTION CIRCUIT ADJUSTMENT

- There are 2 modes of adjustment (setting value) ---- ① 50Hz mode and ② 60Hz mode ---- depending upon the kind of signals (vertical frequency 50Hz / 60Hz).
- When adjusted in mode ① , mode ② will be automatically set.

The setting (adjustment) using the REMOTE CONTROL UNIT is made on the basis of the initial setting values.
The setting values which adjust the screen to the optimum condition can be different from the initial setting values.

Item	Measuring instrument	Test point	Adjustment part	Description
Adjustment of V.HEIGHT & V.POSITION	**Signal generator** **Remote control unit**		**1. VER. POSITION** **3. VER. HEIGHT**	1. Input a cross-hatch signal. 2. Select **3. DEF.** from SERVICE MENU. 3. Select **1. VER. POSITION** with the MENU ▼/▲ key. 4. Set the initial setting value **1. VER. POSITION** with the MENU - / + key. 5. Adjust **1.VER. POSITION** to make **V=V"** as shown in Fig.2 with the MENU - / + key. 6. Select **3. V. HEIGHT** with the MENU ▼/▲ key. 7. Set the initial setting value with the MENU - / + key. 8. As shown in Fig.1, adjust **VER. HEIGHT** and make the vertical screen size **92%** of the picture size with the MENU - / + key of remote control unit.
Adjustment of HOR. POSITION	**Signal generator** **Remote control unit**		**2.HOR. POSITION**	9. Input a circle pattern signal. 10. Select **2. HOR POSITION** with the MENU ▼/▲ key. 11. Set the initial setting value of **2. HOR. POSITION** with the MENU - / + key. 12. Adjust **2. HOR. POSITION** to make **H=H"** as shown in Fig.2 with the MENU - / + key.

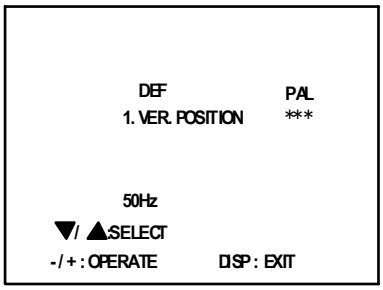

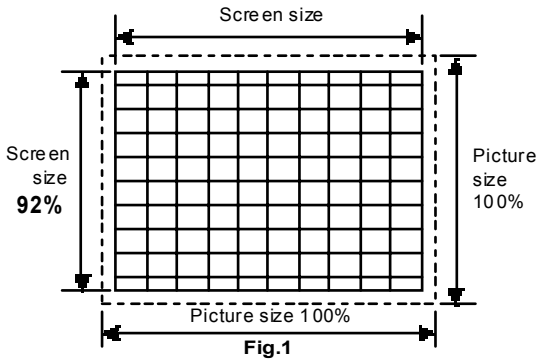

Fig.1

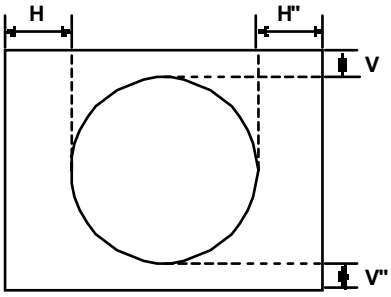

Fig.2

Item	Measuring instrument	Test point	Adjustment part	Description
Adjustment of VER. LIN. & VER. SCURVE	**Signal generator** **Remote control unit**		**4. VER. LIN.** **5. VER. SCURVE**	● **When the vertical linearity has been deteriorated remarkably, perform the following steps.** 13. Input a cross-hatch signal. 14. Select **4. VER. LIN.** with the MENU ▼/▲ key. 15. Set the initial setting value of **4. VER LIN.** with the MENU - / + key. 16. Select **5. VER. SCURVE** with the MENU ▼/▲ key. 17. Set the initial setting value of **5. VER. SCURVE** with the MENU - / + key. 18. Adjust **4. VER. LIN.** and **5. VER. SCURVE** so that the spaces of each line as shown in Fig.3 on **TOP**, **CENTER** and **BOTTOM** become uniform. 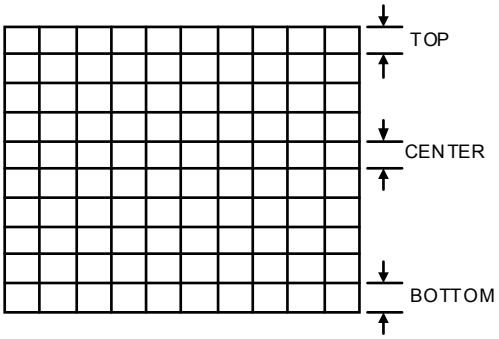 **Fig.3** Make sure that the adjustment is properly done on the screen of 60Hz mode. **[NOTE]** ● Adjust to make both 50Hz & 60Hz are the same v. size and fine straight line. ● When adjust again, adjust 50Hz mode first. ● When adjust in 60Hz mode, only 60Hz mode is adjust.

VSM PRESET SETTING

Item	Measuring instrument	Test point	Adjustment part	Description
Setting of VSM PRESET	**Remote control unit**		**TINT** **COLOUR** **BRIGHT** **CONT.** **SHARP**	1. Select **4. VSM PRESET** from the SERVICE MENU. 2. Select BRIGHT with the PICTURE MODE key. 3. Adjust the MENU ▼/▲ and MENU - / + key to bring the set values of **TINT ～ SHARP** to the values shown in the table. 4. Respectively select the VSM PRESET mode for SOFT and STANDARD, and make similar adjustment as in 3 above.

BRIGHT
☞ TINT **
COLOUR **
BRIGHT **
CONT. **
SHARP **
▼/▲ :SELECT
- / + : OPERATE DISP : EXIT

Mode / item	BRIGHT	STANDARD	SOFT
TINT	+15	←	←
COLOUR	+15	←	←
BRIGHT	+15	←	←
CONT.	+30	+15	+11
SHARP	+15	←	+12

REPLACEMENT OF CHIP COMPONENT

■ CAUTIONS

1. Avoid heating for more than 3 seconds.
2. Do not rub the electrodes and the resist parts of the pattern.
3. When removing a chip part, melt the solder adequately.
4. Do not reuse a chip part after removing it.

■ SOLDERING IRON

1. Use a high insulation soldering iron with a thin pointed end of it.
2. A 30w soldering iron is recommended for easily removing parts.

■ REPLACEMENT STEPS

1. How to remove Chip parts

◆ **Resistors, capacitors, etc**

(1) As shown in the figure, push the part with tweezers and alternately melt the solder at each end.

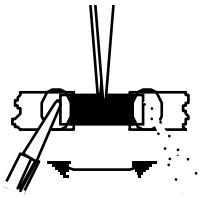

(2) Shift with tweezers and remove the chip part.

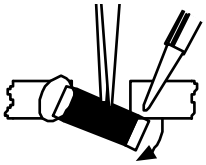

◆ **Transistors, diodes, variable resistors, etc**

(1) Apply extra solder to each lead.

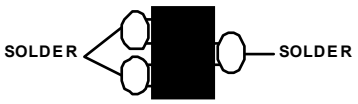

(2) As shown in the figure, push the part with tweezers and alternately melt the solder at each lead. Shift and remove the chip part.

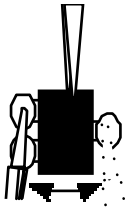

Note : After removing the part, remove remaining solder from the pattern.

2. How to install Chip parts

◆ **Resistors, capacitors, etc**

(1) Apply solder to the pattern as indicated in the figure.

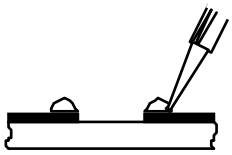

(2) Grasp the chip part with tweezers and place it on the solder. Then heat and melt the solder at both ends of the chip part.

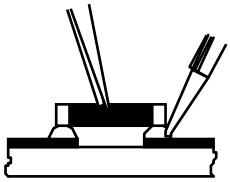

◆ **Transistors, diodes, variable resistors, etc**

(1) Apply solder to the pattern as indicated in the figure.
(2) Grasp the chip part with tweezers and place it on the solder.
(3) First solder lead **A** as indicated in the figure.

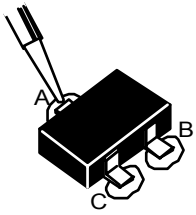
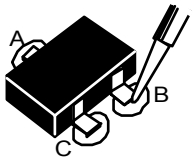
(4) Then solder leads **B** and **C**.