BBK®

SERVICE MANUAL

DW9951S

Ver 0.0

INDEX

PREFACE

- FEATURES 1
- FRONT PANEL&REAR PANEL 2
- REMOTE CONTROL 3

BLOCK DIAGRAM

- BLOCK DIAGRAM 4

EXPLODED VIEW

- EXPLODED VIEW 5

PARTS SPECIFICATIONS

- SST39VF3201 6
- HY5DU561622CT 7
- TSB41AB1 8
- TVP5146 9-12
- CS4360 13-14
- CS5333 15-16
- 74HC/HCT14 17
- 74ALVT16373 18
- MM1221~MM1228 19-20
- LP2995 21
- PQXXXEZ02Z 22
- MSP 34x5G 23
- TUNER 24

SCHEMATIC DIAGRAM&PCB SILKSCREEN

- MAIN BOARD SCHEMATIC AND PCB LAYOUT 25-39
- AV BOARD SCHEMATIC AND PCB LAYOUT 40-51
- KEY BOARD SCHEMATIC AND PCB LAYOUT 52-56
- POWER BOARD SCHEMATIC AND PCB LAYOUT 57-59

PARTSLIST

- MAIN BOARD 60-62
- MAIN KEY BOARD 63
- POWER BOARD 64-65
- AV BOARD 66-67
- POWER SWITCH BOARD 68
- DV BOARD 69
- FRONT AV BOARD 70

BASIC INFORMATION

Features

Introducing American LSI (C-CUBE) Company's latest So C AV system (AVS) recorder processor this unit is, capable of recording all kinds of AV input signals, such as TV, ordinary VCD and DV video camera, into high quality DVD disc. In addition, this player is also a high capacity DVD player, capable of realizing all functions of ordinary DVD player. His 2-in-1 init will make your life more enjoyable and wonderful.

Support multiple input sources recording

1 Composite video input
2 S-video input
3 TV tuner input
4 DV input
5 Analog audio terminal input
6.SCART input

Provide multiple output signals

1.Composite video output
2.S-video output
3.Component video output
4.SCART output
5. 5.1 CH audio outputs
6.Optical / Coaxial output

Multiple DVD recording qualities

This unit provides you with 4 kinds of recording qualities, each of which has different resolution and recording time, to make you choose between high resolution picture quality and super long time of recording.

Multiple recording methods

This unit facilitates your usage with three kinds of recording methods: ordinarily manual recording, time recording, OTR one-touch recording and DV recording.

Convenient menu operation

This unit incorporates convenient interface menu operation. No need for you to remember the multifarious function buttons on remote control, and you can realize the majority of functions through using a few direction and selection buttons.

Standby function

Remote control standby function makes your operation more convenient and helps you fulfill time recording function on the basis of saving electric power.

Highly intelligent upgrading function

This unit has automatic upgrading function to make you upgrade it into the latest edition with our upgrading disc at any time.

This player can use the following discs

This unit can play DVD, DVD+R, DVD+RW, VCD, SVCD, CD-DA and MP3.
This unit can record DVD+R and DVD+RW

BASIC INFORMATION

Illustration of the Front Panel

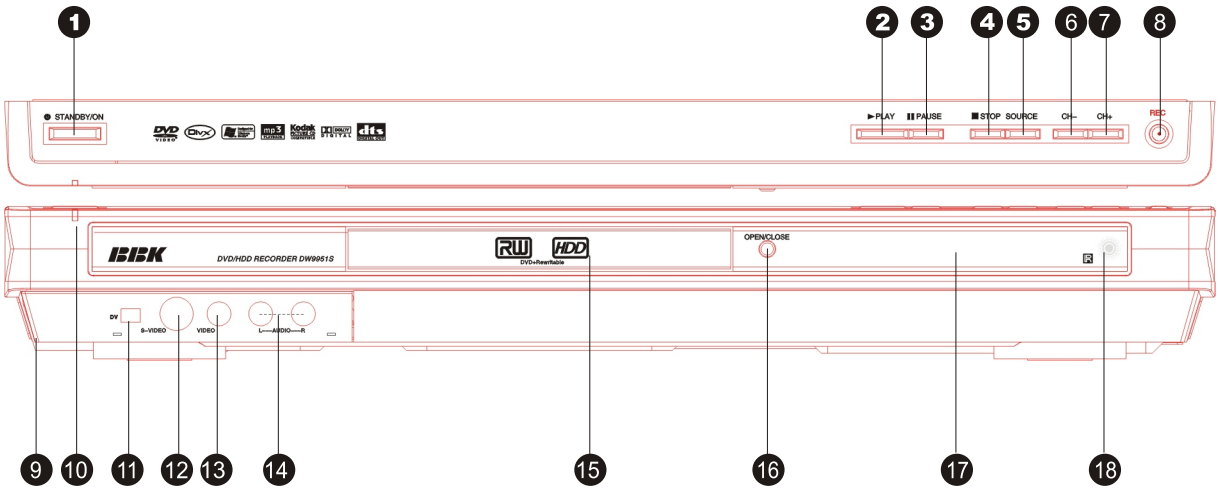

1.STANDBY/ON button
2.PLAY button
3.PAUSE button
4.STOP button
5.SOURCE button
6.CH- button
7.CH+ button
8.REC button

9.Open the terminal protection cover here
10.STANDBY indicator
11.DV input terminal
12.Front S-Video input terminal
13.Front Video input terminal

14.Front L/R audio channel input terminal
15.Disc tray
16.OPEN/CLOSE button
17.VFD display window
18.Infrared remote sensor

- The function of buttons on the front panel is the same with that of the corresponding ones on the remote control.
- The input terminals on the front panel can only be seen when the protection cover is opened.

Illustration of the Rear Panel

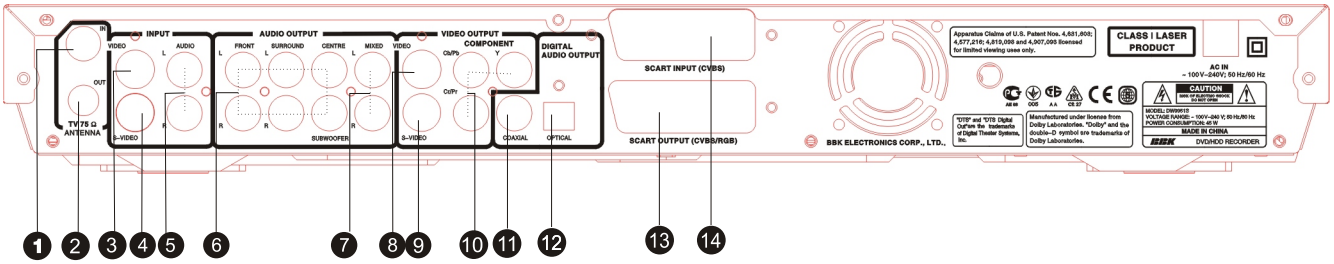

1.TV TUNER input terminal
※ The antenna cable plug is inserted here
2.TV TUNER output terminal
※ This terminal is directly connected with the TV TUNER Input Terminal inside this unit
3.Rear Video input terminal
4.Rear S-Video input terminal

5.Rear L/R channel audio input terminals
6.5.1CH output terminals
7.L/R channel audio output terminals
8.COMPOSITE VIDEO output terminal
9.S-VIDEO output terminal
10.COMPONENT VIDEO output terminal
11.COAXIAL output terminal

12.OPTICAL output terminal
13.CVBS/RGB and Audio output terminal
14.CVBS and Audio input terminal

Illustration of the Remote Control

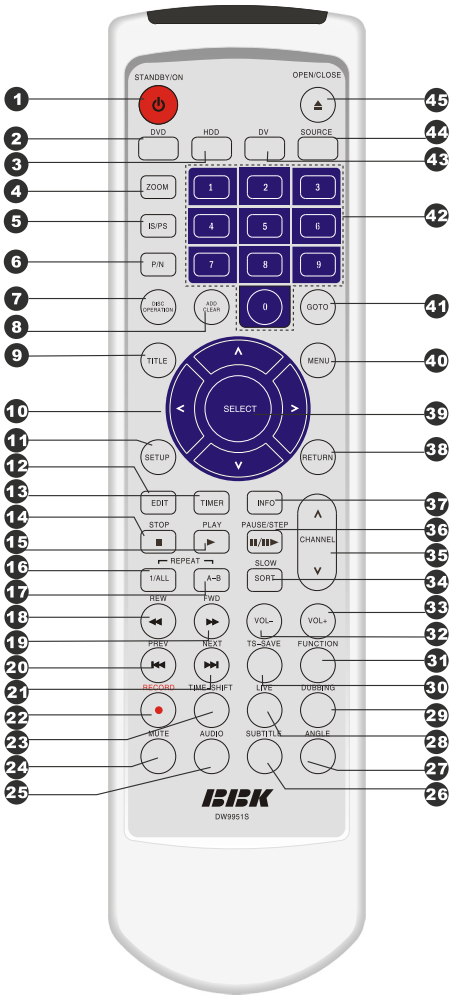

1.STANDBY/ON button
Switch between standby state and working state
2.DVD button
Switch to DVD mode
3.HDD button
Switch to HDD mode
4.ZOOM button
Enlarge the DVD/VCD/JPEG picture
5.IS/PS button
The progressive scan and interlacing scan conversion
6.P/N button
The PAL/NTSC TV output system conversion
7. DISC OPERATION button
Enter the disc operate mode
8.ADD/CLEAR button
※Add/Clear the content items in the list window
※Clear the wrong input numbers
9.TITLE button
Display DVD titles menu
10.CURSOR button
Move the cursor
11.SETUP button
System setup
12.EDIT button
Enter the edit mode
13.TIMER button
Enter the timing record setup
14.STOP button
Stop playing/recording
15.PLAY button
Play a disc
16.REPEAT 1/ALL button
Repeat playback
17.REPEAT A-B button
Repeat A-B segment playback
18.REW button
Fast backward play
19.FWD button
Fast forward play
20.PREV button
Skip backward
21.NEXT button
Skip forward
22.RECORD button
Record the external signals
23.TIME-SHIFT button
Watch TV and display time shifting
24.MUTE button
Mute the sound
25.AUDIO button
Switch the audio channel
26.SUBTITLE button
Change subtitle languages
27.ANGLE button
Change camera angles
28 LIVE button
From TV time shift cover to TV live
29.DUBBING button
Copy program(s) from HDD to recordable disc
30.TS-SAVE button
Save the time shift contents to HDD
31.FUNCTION button
System menu
32.VOL- button
Decrease volume
33.VOL+ button
Increase volume
34.SLOW/SORT button
Scan in slow forward or sort the HDD titles
35.CHANNEL∧/CHANNEL∨ button
Change the TV channel up/down
36.PAUSE/STEP button
Pause or Play frame by frame
37.INFO button
Display/hide information menu
38 RETURN button
Back to the previous menu
39.SELECT button
Confirm the selected item
40.MENU button
※ Display the disc menu
※ Open/Close PBC
41.GOTO button
Play from the desired location
42.NUMBER 0-9 button
43.DV button
Switch to DV status
44.SOURCE button
Switch external input signal source
45.OPEN/CLOSE button
Open or close the disc tray

BLOCK DIAGRAM

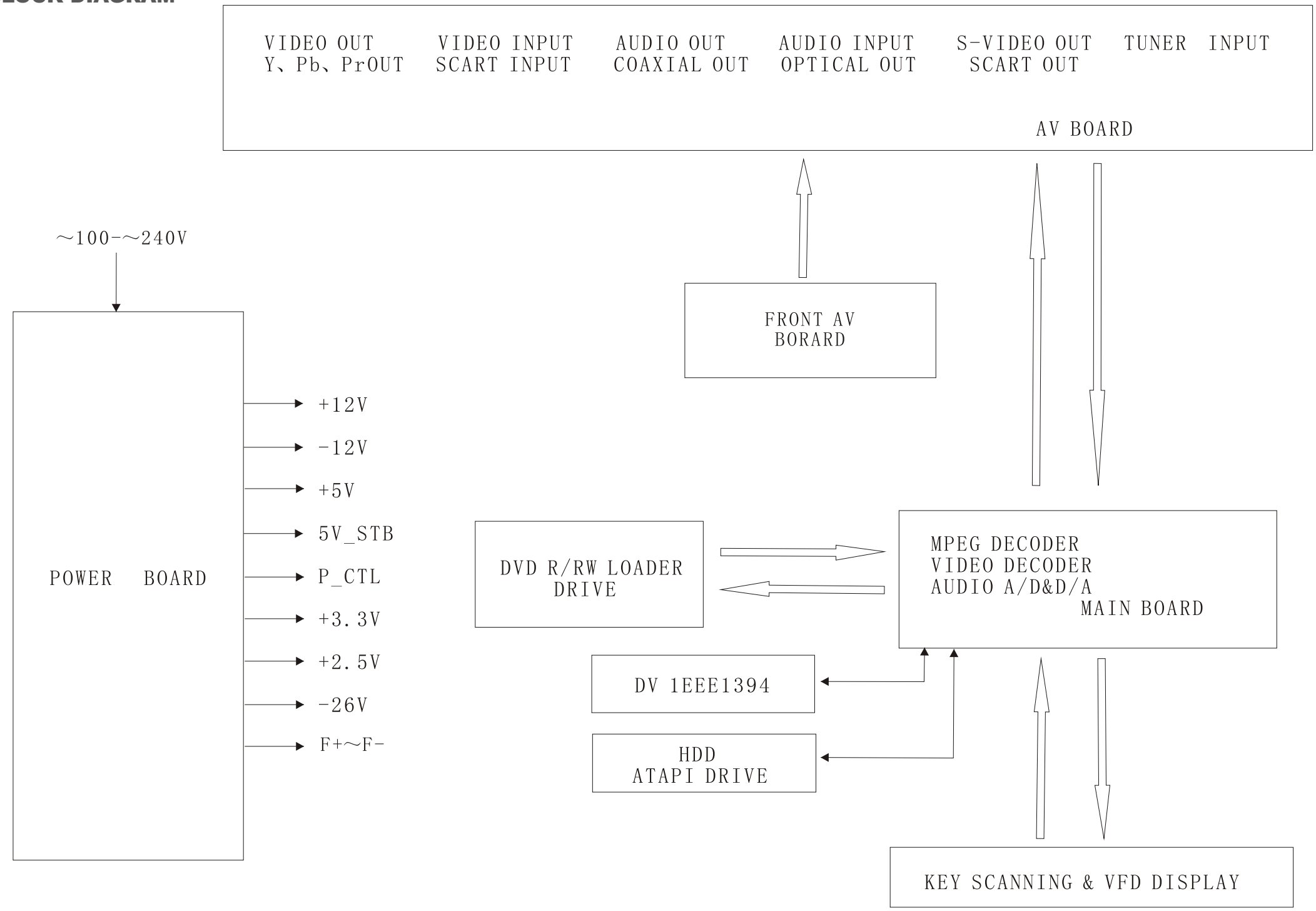

EXPLODED VIEW

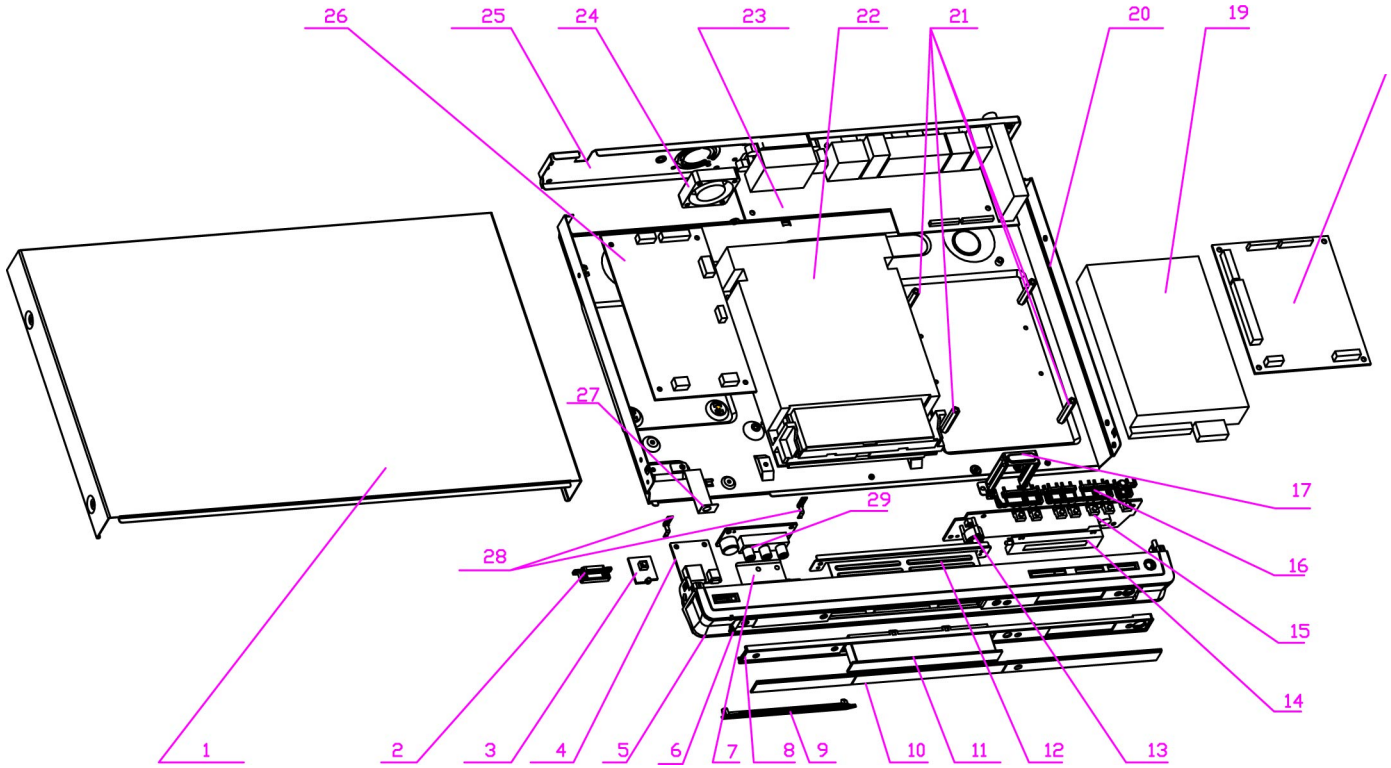

Exploded Drawing

1.TOPCOVER
2.POWERKEY
3.STANDBYPCB
4.DVPCB
5.FRONTSHELL
6.LIGHTINS
7.WJ-JIEDI02
8.DECORDER
9.COVER
10.LENS
11.CDOOR
12.FRONT-BKT01
13.OPENKEY
14.VFD-DOWN01
15.DISPCB
16.FUCKTIONKEY
17.BKT02
18.MAINBORD
19.HDD
20.BOTTOMCOVER
21.COPPERPOOL
22.DRIVER
23.IOPCB
24.FAN
25.BACKCOVER
26.POWEPCB
27.JIEDI02
28.SPRING
29.FRONTAV.

CONNECTION DIAGRAMS

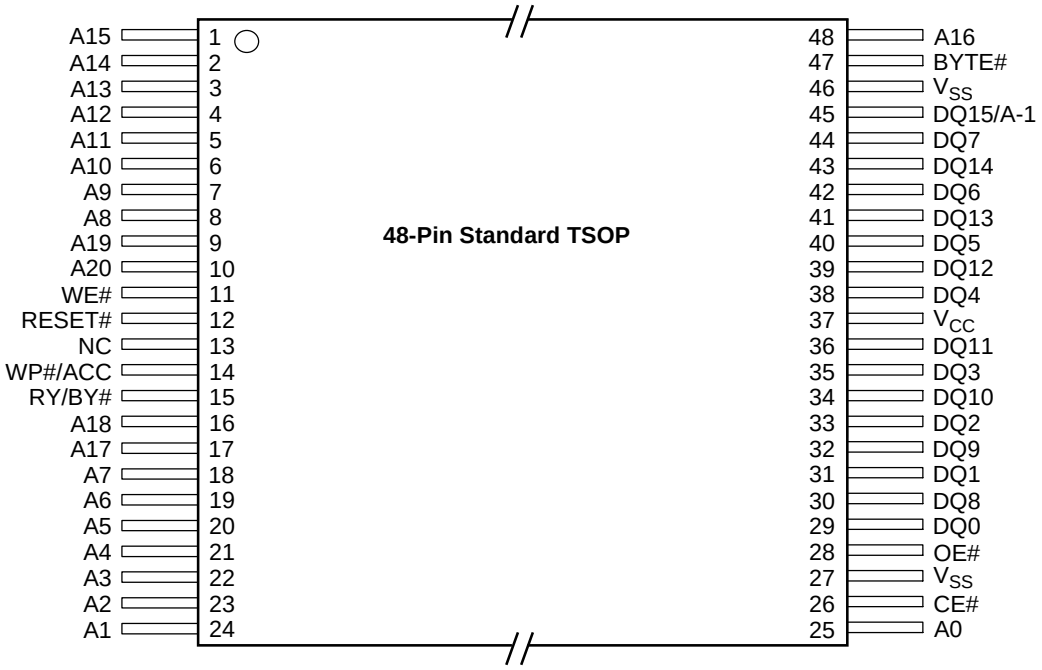

PIN CONFIGURATION(TSOP)

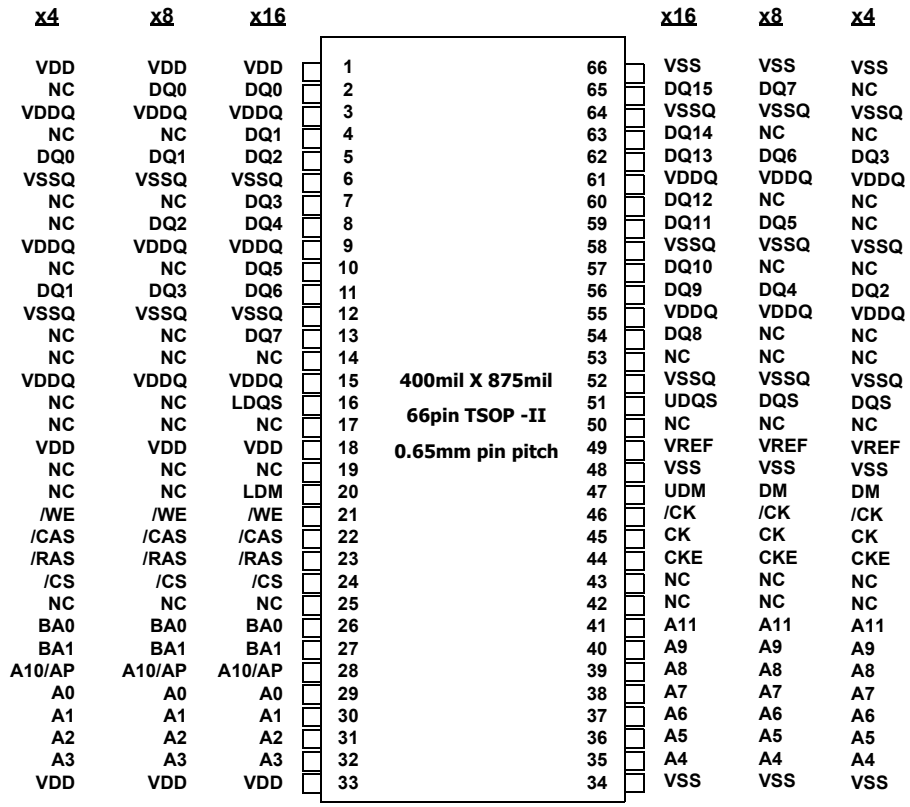

ROW AND COLUMN ADDRESS TABLE

ITEMS	32Mx4	16Mx8	8Mx16
Organization	8M x 4 x 4banks	4M x 8 x 4banks	2M x 16 x 4banks
Row Address	A0 - A11	A0 - A11	A0 - A11
Column Address	A0-A9, A11	A0-A9	A0-A8
Bank Address	BA0, BA1	BA0, BA1	BA0, BA1
Auto Precharge Flag	A10	A10	A10
Refresh	4K	4K	4K

description (continued)

required for normal network operation regardless of the state of the PHY-LLC interface. When the interface is in the reset or disabled state and LPS is again observed active, the PHY initializes the interface and returns it to normal operation.

When the PHY-LLC interface is in the low-power disabled state, the TSB41AB1 automatically enters a low-power mode if the port is inactive (disconnected, disabled, or suspended). In this low-power mode, the TSB41AB1 disables its internal clock generators and also disables various voltage and current reference circuits depending on the state of the port (some reference circuitry must remain active in order to detect new cable connections, disconnections, or incoming TPBIAS, for example). The lowest power consumption (the ultralow-power sleep mode) is attained when the port is either disconnected, or disabled with the port interrupt enable bit cleared. The TSB41AB1 exits the low-power mode when the LPS input is asserted high or when a port event occurs which requires that the TSB41AB1 become active in order to respond to the event or to notify the LLC of the event (for example, incoming bias is detected on a suspended port, a disconnection is detected on a suspended port, a new connection is detected on a nondisabled port, etc.). The SYSCLK output becomes active (and the PHY-LLC interface is initialized and becomes operative) within 7.3 ms after LPS is asserted high when the TSB41AB1 is in the low-power mode.

The PHY uses the C/LKON terminal to notify the LLC to power up and become active. When activated, the C/LKON signal is a square wave of approximately 163-ns period. The PHY activates the C/LKON output when the LLC is inactive and a wake-up event occurs. The LLC is considered inactive when either the LPS input is inactive, as described above, or the LCtrl bit is cleared to 0. A wake-up event occurs when a link-on PHY packet addressed to this node is received, or when a PHY interrupt occurs. The PHY deasserts the C/LKON output when the LLC becomes active (both LPS active and the LCtrl bit set to 1). The PHY also deasserts the C/LKON output when a bus reset occurs unless a PHY interrupt condition exists which would otherwise cause C/LKON to be active.

PHP package terminal diagram

PHP PACKAGE
(TOP VIEW)

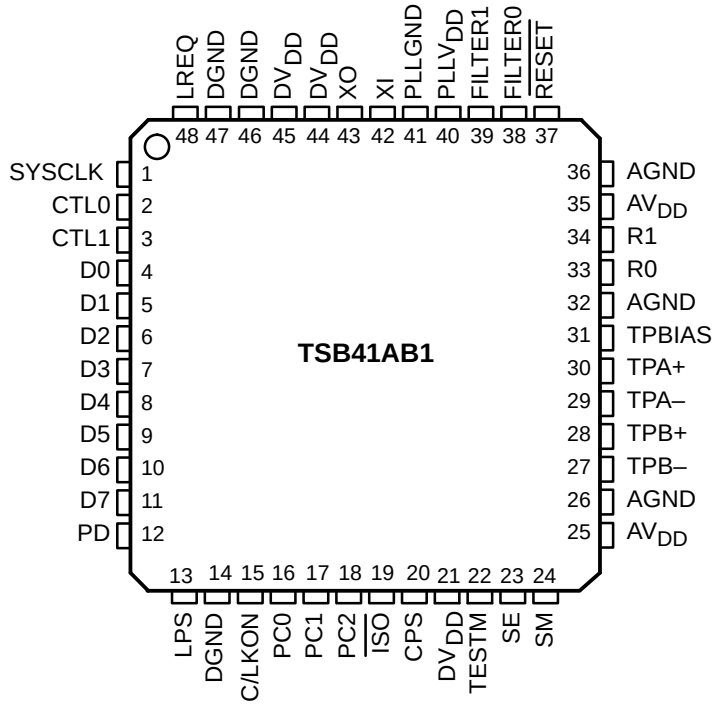

1.5 Functional Block Diagram

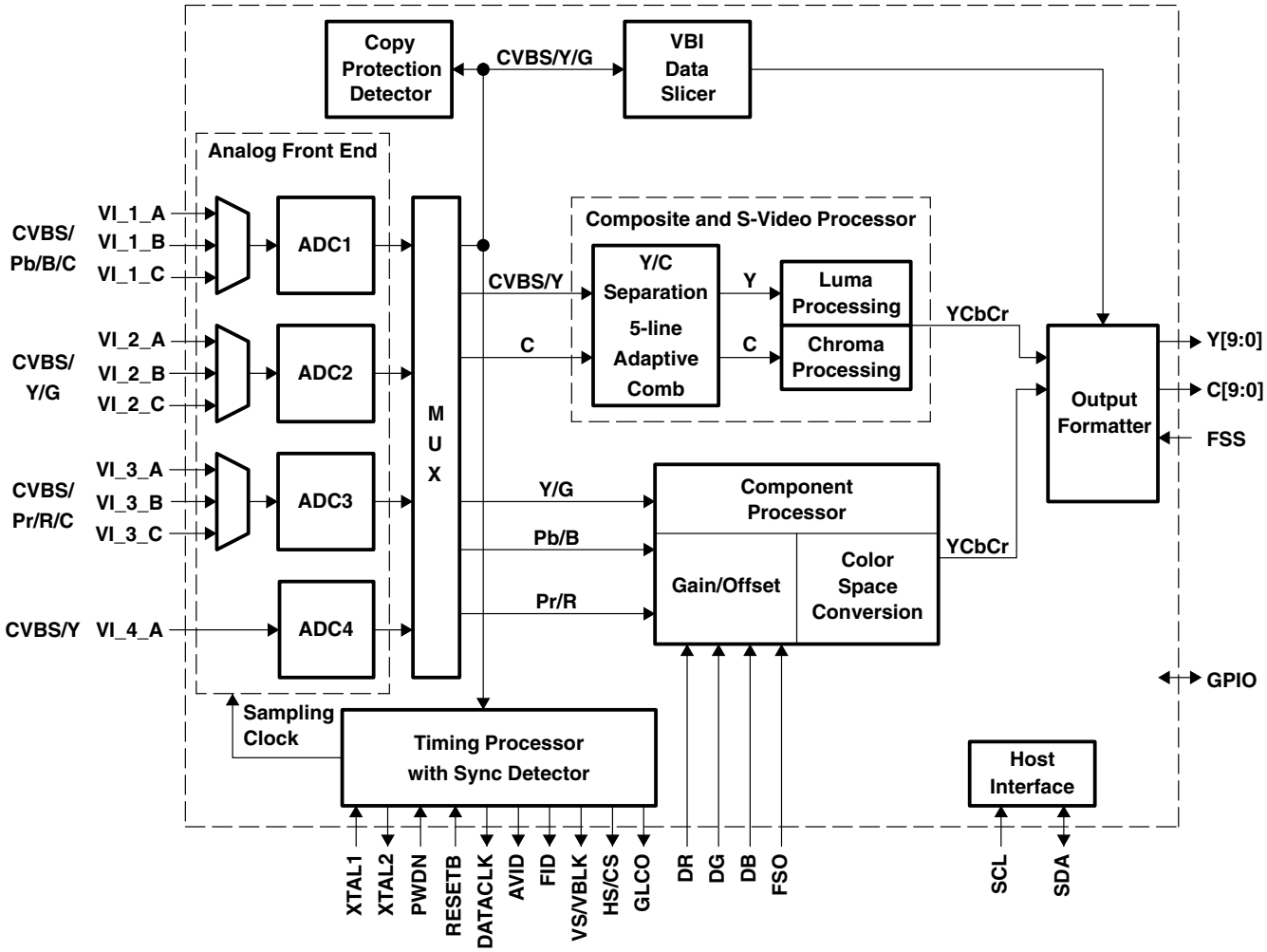

Figure 1–1. Functional Block Diagram

1.6 Terminal Assignments

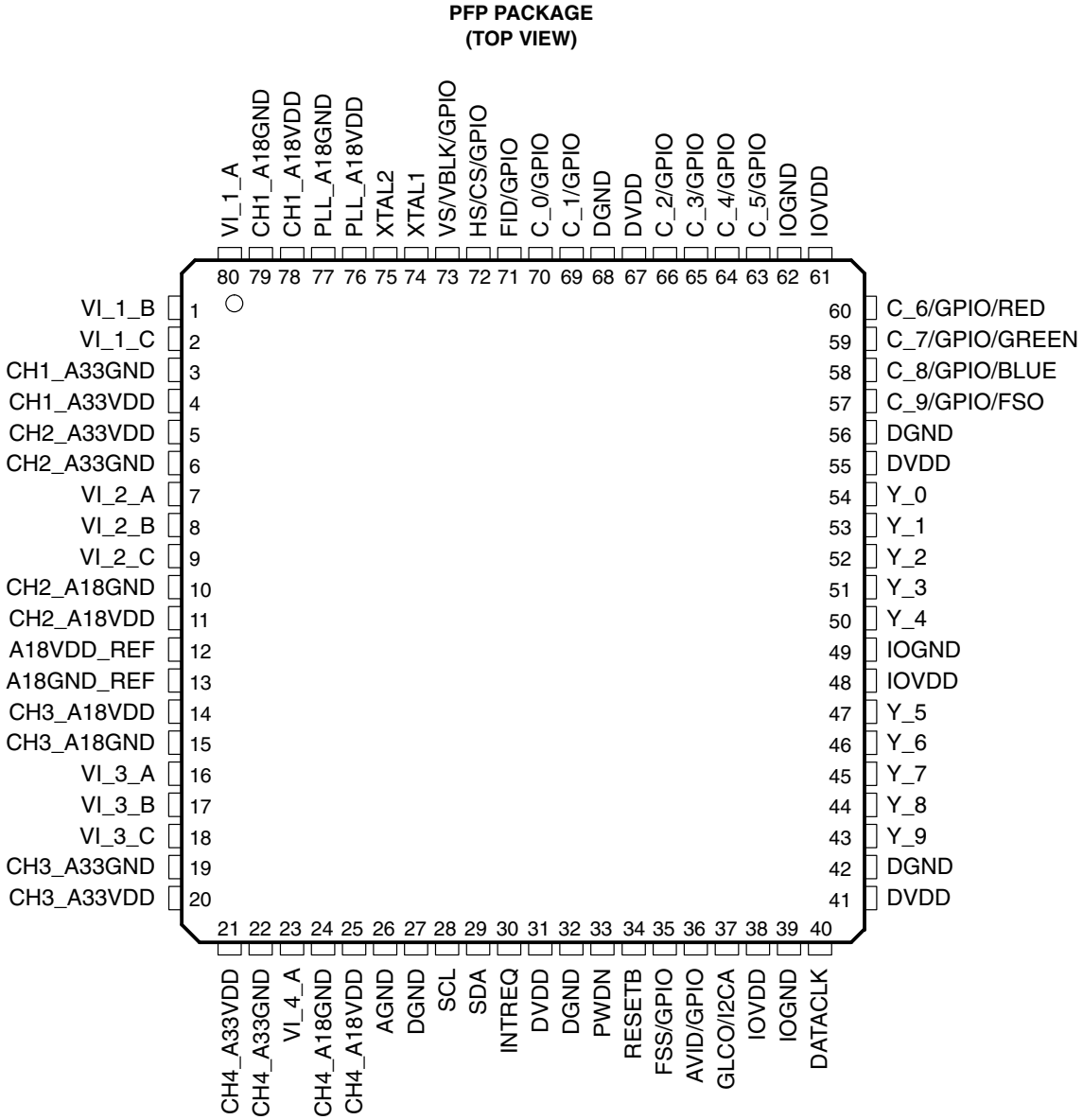

Figure 1–2. Terminal Assignments Diagram

1.7 Terminal Functions

Table 1–1. Terminal Functions

TERMINAL NAME	TERMINAL NUMBER	I/O	DESCRIPTION
Analog Video			
VI_1_A VI_1_B VI_1_C VI_2_A VI_2_B VI_2_C VI_3_A VI_3_B VI_3_C VI_4_A	80 1 2 7 8 9 16 17 18 23	I	VI_1_x: Analog video input for CVBS/Pb/B/C VI_2_x: Analog video input for CVBS/Y/G VI_3_x: Analog video input for CVBS/Pr/R/C VI_4_A: Analog video input for CVBS/Y Up to 10 composite, 4 S-video, and 2 composite or 3 component video inputs (or a combination thereof) can be supported. The inputs must be ac-coupled. The recommended coupling capacitor is 0.1 μF. The possible input configurations are listed in the input select register at I^2C subaddress 00h (see Section 2.11.1).
Clock Signals			
DATACLK	40	O	Line-locked data output clock.
XTAL1	74	I	External clock reference input. It may be connected to an external oscillator with a 1.8-V compatible clock signal or a 14.31818-MHz crystal oscillator.
XTAL2	75	O	External clock reference output. Not connected if XTAL1 is driven by an external single-ended oscillator.
Digital Video			
C[9:0]/ GPIO[9:0]	57, 58, 59, 60, 63, 64, 65, 66, 69, 70	O	Digital video output of CbCr, C[9] is MSB and C[0] is LSB. Unused outputs can be left unconnected. Also, these terminals can be programmable general-purpose I/O. For the 8-bit mode, the two LSBs are ignored.
D_BLUE	58	I	Digital BLUE input from overlay device
D_GREEN	59	I	Digital GREEN input from overlay device
D_RED	60	I	Digital RED input from overlay device
FSO	57	I	Fast-switch overlay between digital RGB and any video
Y[9:0]	43, 44, 45, 46, 47, 50, 51, 52, 53, 54	O	Digital video output of Y/YCbCr, Y[9] is MSB and Y[0] is LSB. For the 8-bit mode, the two LSBs are ignored. Unused outputs can be left unconnected.
Miscellaneous Signals			
FSS/GPIO	35	I/O	Fast-switch (blanking) input. Switching signal between the synchronous component video (YPbPr/RGB) and the composite video input. Programmable general-purpose I/O
GLCO/I2CA	37	I/O	Genlock control output (GLCO). Two Genlock data formats are available: TI format and real time control (RTC) format. During reset, this terminal is an input used to program the I^2C address LSB.
INTREQ	30	O	Interrupt request
PWDN	33	I	Power down input: 1 = Power down 0 = Normal mode
RESETB	34	I	Reset input, active low

Table 1–1. Terminal Functions (Continued)

TERMINAL NAME	TERMINAL NUMBER	I/O	DESCRIPTION
Host Interface			
SCL	28	I	I^2C clock input
SDA	29	I/O	I^2C data bus
Power Supplies			
AGND	26	I	Analog ground. Connect to analog ground.
A18GND_REF	13	I	Analog 1.8-V return
A18VDD_REF	12	I	Analog power for reference 1.8 V
CH1_A18GND CH2_A18GND CH3_A18GND CH4_A18GND	79 10 15 24	I	Analog 1.8-V return
CH1_A18VDD CH2_A18VDD CH3_A18VDD CH4_A18VDD	78 11 14 25	I	Analog power. Connect to 1.8 V.
CH1_A33GND CH2_A33GND CH3_A33GND CH4_A33GND	3 6 19 22	I	Analog 3.3-V return
CH1_A33VDD CH2_A33VDD CH3_A33VDD CH4_A33VDD	4 5 20 21	I	Analog power. Connect to 3.3 V.
DGND	27, 32, 42, 56, 68	I	Digital return
DVDD	31, 41, 55, 67	I	Digital power. Connect to 1.8 V.
IOGND	39, 49, 62	I	Digital power return
IOVDD	38, 48, 61	I	Digital power. Connect to 3.3 V or less for reduced noise.
PLL_A18GND	77	I	Analog power return
PLL_A18VDD	76	I	Analog power. Connect to 1.8 V.
Sync Signals			
HS/CS/GPIO	72	I/O	Horizontal sync output or digital composite sync output Programmable general-purpose I/O
VS/VBLK/GPIO	73	I/O	Vertical sync output (for modes with dedicated VSYNC) or VBLK output Programmable general-purpose I/O
FID/GPIO	71	I/O	Odd/even field indicator output. This terminal needs a pulldown resistor. Programmable general-purpose I/O
AVID/GPIO	36	I/O	Active video indicator output Programmable general-purpose I/O

2. TYPICAL CONNECTION DIAGRAM

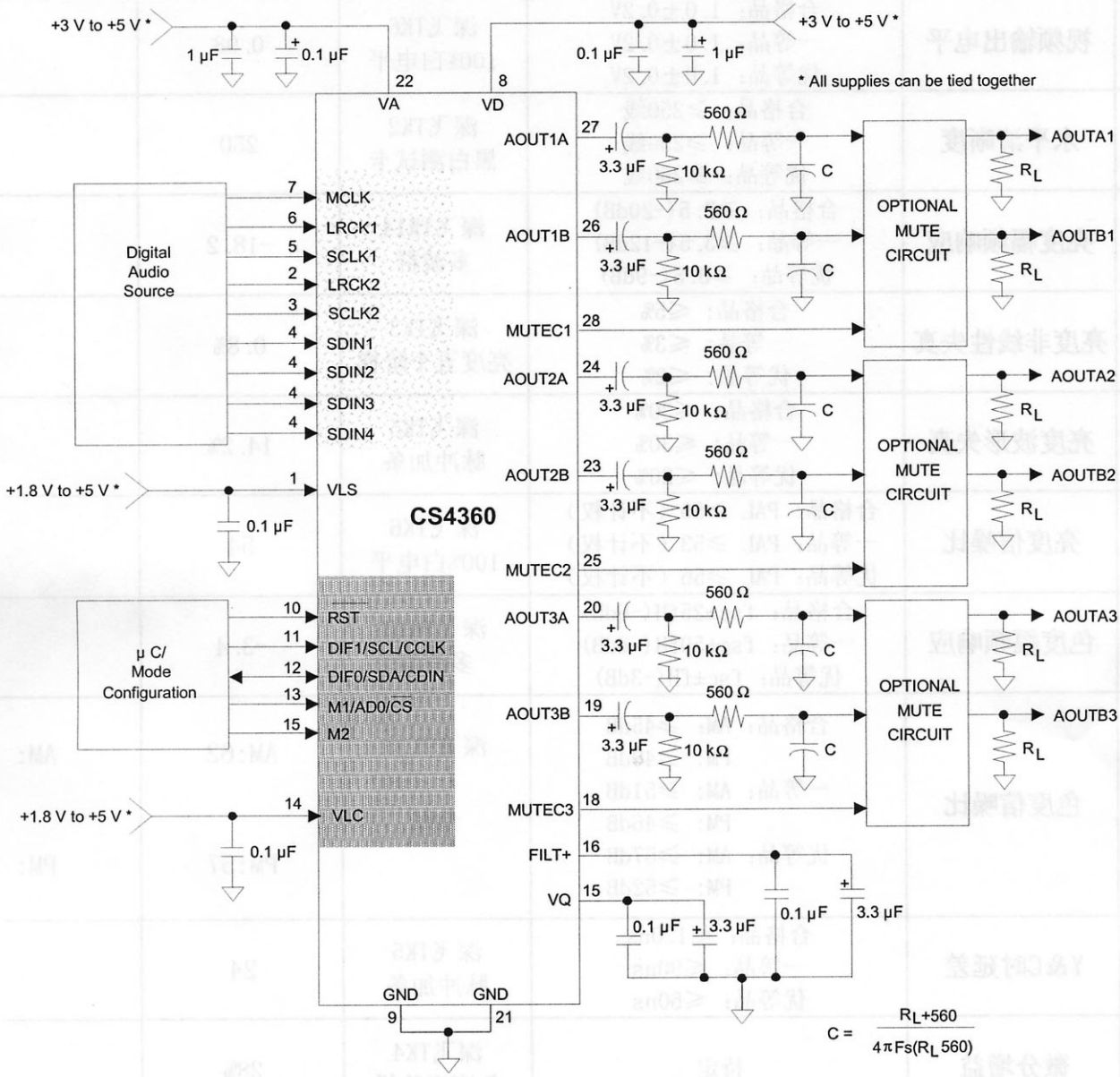

Figure 4. Typical Connection Diagram

5. PIN DESCRIPTION

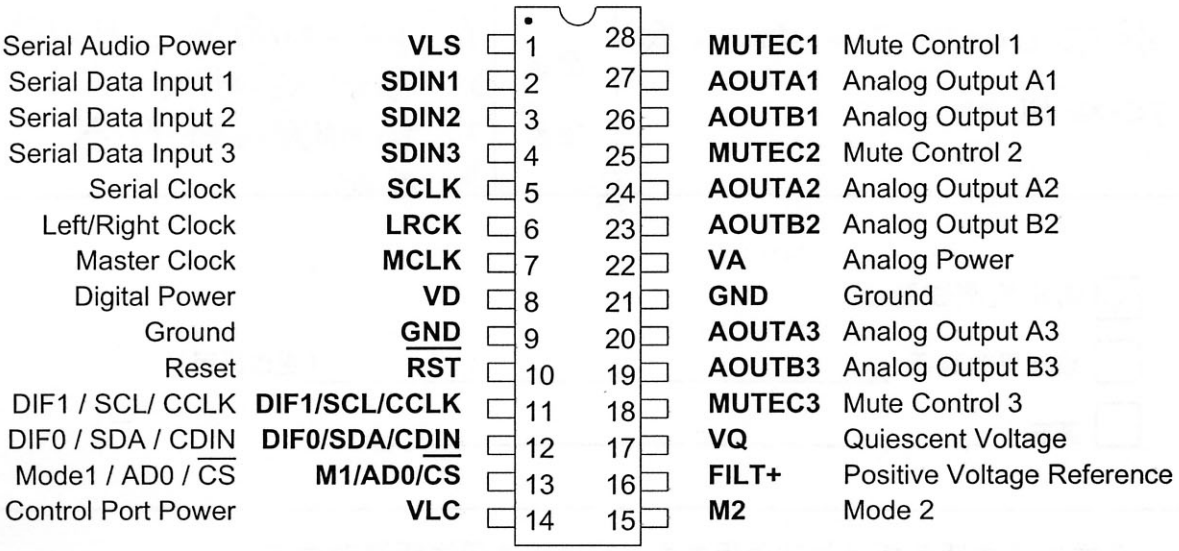

Pin Name	#	Pin Description
VLS	1	**Serial Audio Interface Power** (*Input*) - Determines the required signal level for the serial audio interface. Refer to the Recommended Operating Conditions for appropriate voltages. Applies to pins 2-7.
SDIN1 SDIN2 SDIN3	2 3 4	**Serial Audio Data Input** (*Input*) - Input for two's complement serial audio data. SDIN1 corresponds to AOUT1x, SDIN2 corresponds to AOUT2x and SDIN3 corresponds to AOUT3x.
SCLK	5	**Serial Clock** (*Input*) - Serial clock for the serial audio interface.
LRCK	6	**Left / Right Clock** (*Input*) - Determines which channel, Left or Right, is currently active on the serial audio data line. The frequency of the left/right clock must be at the audio sample rate, Fs.
MCLK	7	**Master Clock** (*Input*) - Clock source for the delta-sigma modulator and digital filters. Table 6 illustrates several standard audio sample rates and the required master clock frequency.
VD	8	**Digital Power** (*Input*) - Positive power supply for the digital section. Refer to the Recommended Operating Conditions for appropriate voltages.
GND	9 21	**Ground** (*Input*) - Ground reference. Should be connected to analog ground.
$\overline{\text{RST}}$	10	**Reset** (*Input*) - The device enters a low power mode and all internal registers are reset to their default settings when low. The control port cannot be accessed when Reset is low.
VLC	14	**Control Port Interface Power** (*Input*) - Determines the required signal level for the control port and provides power for bidirectional control port pins. Refer to the Recommended Operating Conditions for appropriate voltages. Applies to pins 10-13 and 15.
FILT+	16	**Positive Voltage Reference** (*Output*) - Positive reference voltage for the internal sampling circuits. Requires the capacitive decoupling to GND as shown in the Typical Connection Diagram.

3. PIN DESCRIPTION

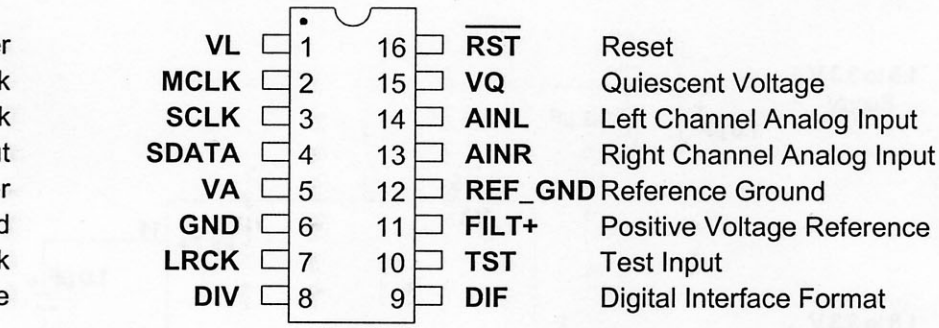

Interface Power	1	**VL** (*Input*) - Digital interface power supply. Typically 1.8 to 3.3 VDC.
Master Clock	2	**MCLK** (*Input*) - The master clock frequency must be either 256x, 384x, 512x, 768x or 1024x the input sample rate in Base Rate Mode (BRM) and 128x, 192x, 256x, 384x the input sample rate in High Rate Mode (HRM). Table 1 illustrates several standard audio sample rates and the required master clock frequencies.
Serial Clock	3	**SCLK** (*Input/Output*) - Clocks the individual bits of the serial data out of the SDOUT pin. The required relationship between the Left/Right clock, serial clock and serial data is defined by the DIF pin.
Serial Audio Data Out (M/S select)	4	**SDATA** (*Output*) - This pin serves two functions. First: two's complement MSB-first serial data is output on this pin. The data is clocked out of SDOUT via the serial clock and the channel is determined by the Left/Right clock. The required relationship between the Left/Right clock, serial clock and serial data is defined by the DIF pin. Second: Master/Slave mode selection is determined, at startup, by a 47 kOhm pullup/pull-down on this line. A pullup to VL selects Master mode and a pulldown to GND selects Slave mode.
Analog Power	5	**VA** (*Input*) - Analog power supply. Typically 1.8 to 3.3 VDC.
Ground	6	**GND** (*Input*) - Ground Reference.

Sample Rate (kHz)	MCLK (MHz)								
	HRM				BRM				
	128x	192x	256x*	384x*	256x	384x	512x	768x*	1024x*
32	4.0960	6.1440	8.1920	12.2880	8.1920	12.2880	16.3840	24.5760	32.7680
44.1	5.6448	8.4672	11.2896	16.9344	11.2896	16.9344	22.5792	32.7680	45.1584
48	6.1440	9.2160	12.2880	18.4320	12.2880	18.4320	24.5760	36.8640	49.1520
64	8.1920	12.2880	16.3840	24.5760	-	-	-	-	-
88.2	11.2896	16.9344	22.5792	33.8688	-	-	-	-	-
96	12.2880	18.4320	24.5760	36.8640	-	-	-	-	-

** DIV= Hi*

Table 1. Common Clock Frequencies

2. TYPICAL CONNECTION DIAGRAM

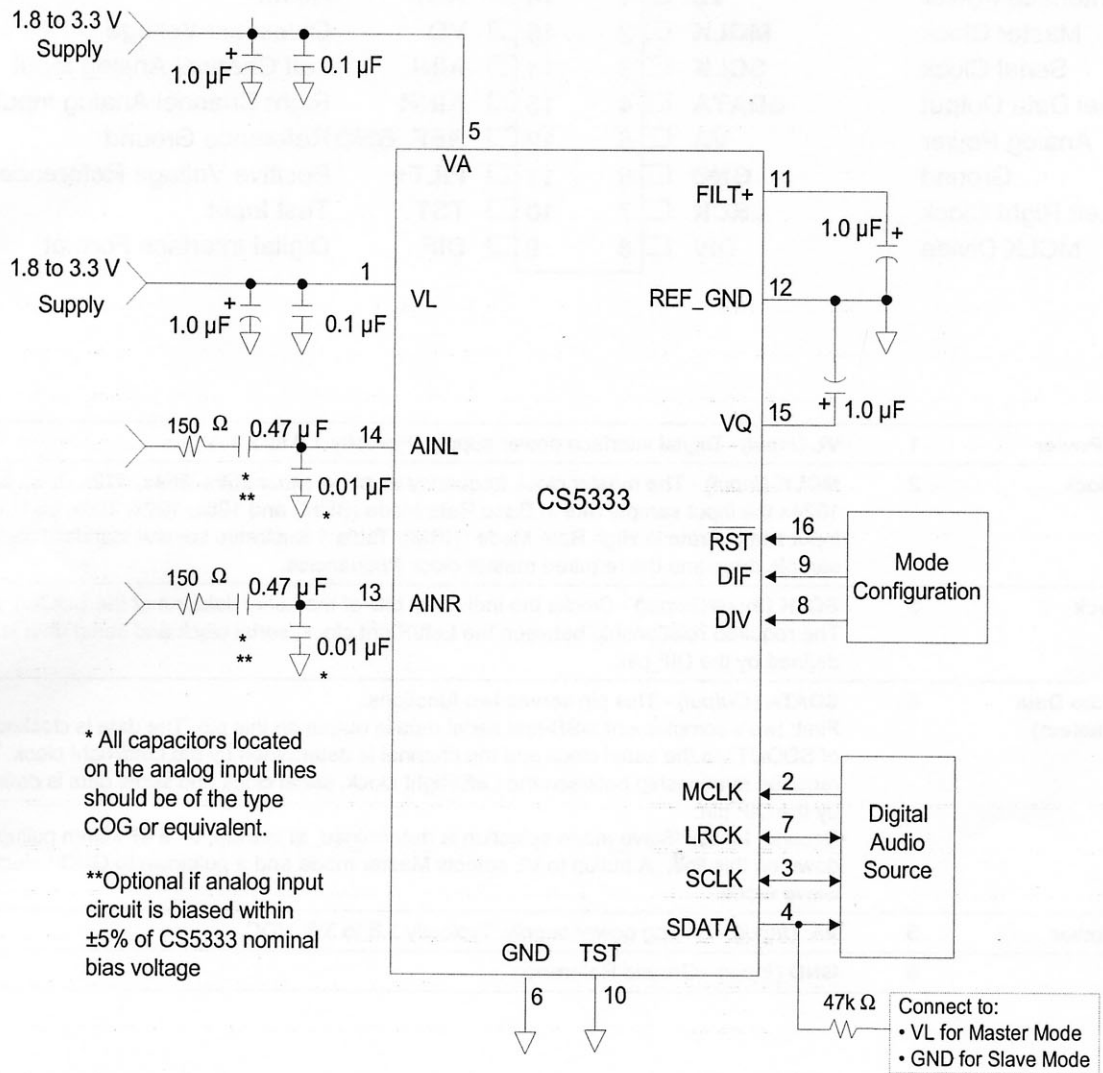

Figure 3. Typical Connection Diagram

PIN DESCRIPTION

PIN NO.	SYMBOL	NAME AND FUNCTION
1, 3, 5, 9, 11, 13	1A to 6A	data inputs
2, 4, 6, 8, 10, 12	1Y to 6Y	data outputs
7	GND	ground (0 V)
14	V_{CC}	positive supply voltage

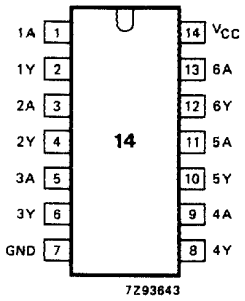

Fig.1 Pin configuration.

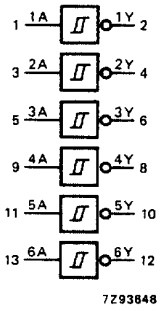

Fig.2 Logic symbol.

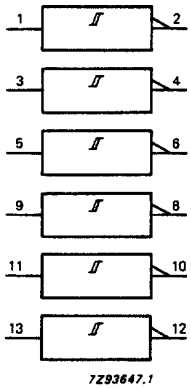

Fig.3 IEC logic symbol.

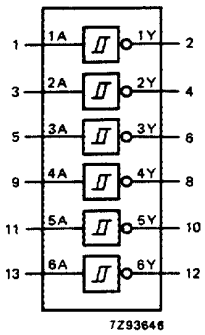

Fig.4 Functional diagram.

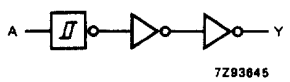

Fig.5 Logic diagram (one Schmitt trigger).

FUNCTION TABLE

INPUT	OUTPUT
nA	nY
L	H
H	L

Notes

1. H = HIGH voltage level
   L = LOW voltage level

APPLICATIONS

- Wave and pulse shapers
- Astable multivibrators
- Monostable multivibrators

2.5V/3.3V 16-bit transparent D-type latch (3-State) 74ALVT16373

LOGIC SYMBOL

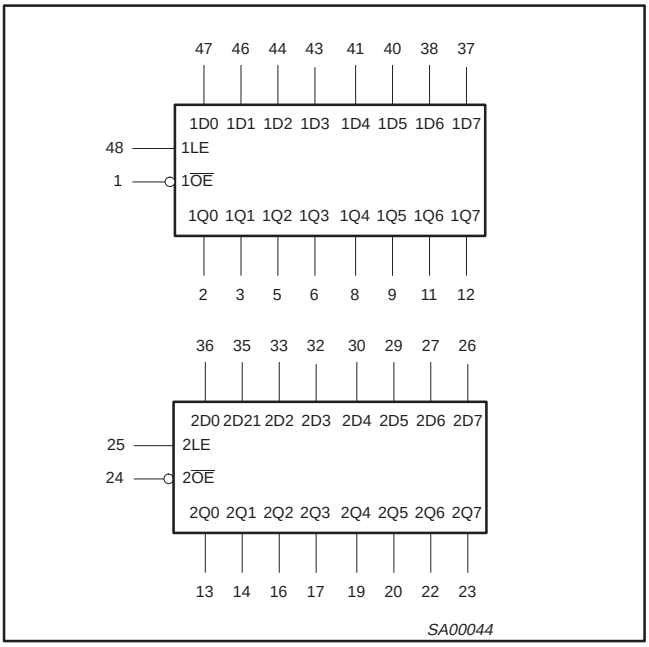

LOGIC SYMBOL (IEEE/IEC)

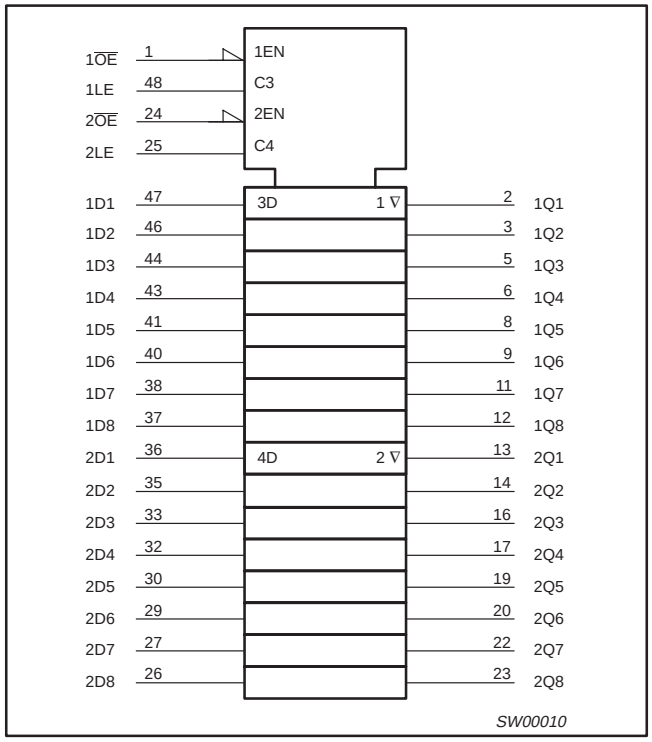

PIN DESCRIPTION

PIN NUMBER	SYMBOL	FUNCTION
47, 46, 44, 43, 41, 40, 38, 37, 36, 35, 33, 32, 30, 29, 27, 26	1D0 – 1D7 2D0 – 2D7	Data inputs
2, 3, 5, 6, 8, 9, 11, 12, 13, 14, 16, 17, 19, 20, 22, 23	1Q0 – 1Q7 2Q0 – 2Q7	Data outputs
1, 24	$1\overline{OE}$, $2\overline{OE}$	Output enable inputs (active-Low)
48, 25	1LE, 2LE	Enable inputs (active-High)
4, 10, 15, 21, 28, 34, 39, 45	GND	Ground (0V)
7, 18, 31, 42	V_{CC}	Positive supply voltage

PIN CONFIGURATION

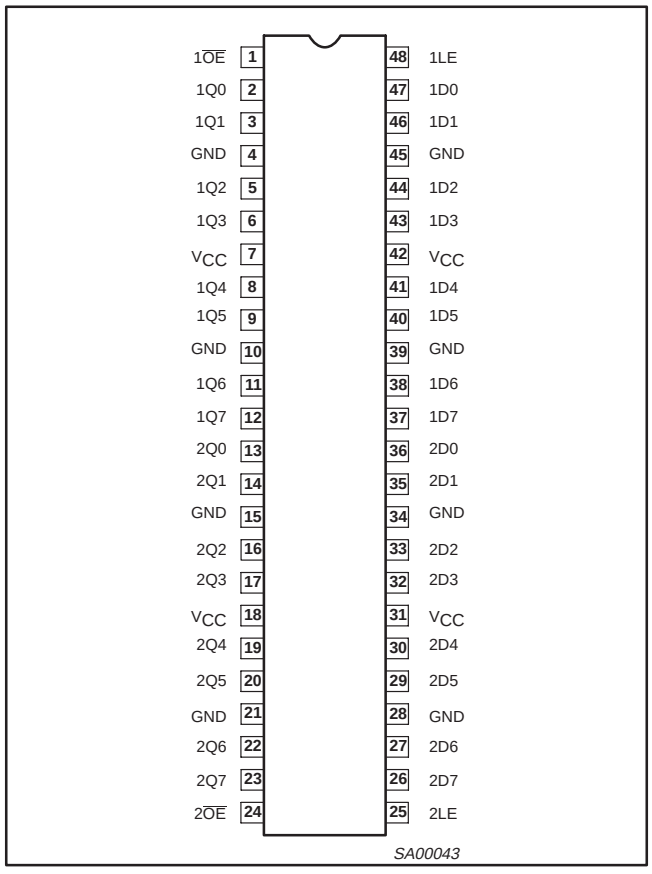

2-Input 1-Output Video Switch (75Ω driver)/3-Input 1-Output Video Switch (75Ω driver)
Monolithic IC MM1221~MM1228

Outline

These ICs are high grade video switches with 2-input 1-output or 3-input 1-output and built-in 75Ω driver.
The series includes those with and without built-in clamp and 6dB amp circuits.
Circuit configuration tables and block diagrams are as follows.
MM1228 is used as the representative model in this description.

MM1221~MM1228 Series Circuit Configuration Table

Model name	# of Inputs	# of Outputs	6dB amp circuit	Clamp circuit	Power supply voltage range
MM1221	2	1	No	No	8~13V
MM1222	2	1	Yes	No	8~13V
MM1223	3	1	No	No	8~13V
MM1224	3	1	Yes	No	8~13V
MM1225	2	1	No	Yes	4.7~13V
MM1226	2	1	Yes	Yes	4.7~13V
MM1227	3	1	No	Yes	4.7~13V
MM1228	3	1	Yes	Yes	4.7~13V

MM1221~MM1228 Input/Output Voltage Measurement Values (typ.)

Model name	Power supply voltage	5V	9V	12V	Unit
MM1221	Input voltage		4.53	6.05	V
	Output voltage		4.5	6.1	V
MM1222	Input voltage		4.05	5.4	V
	Output voltage		5.34	7.12	V
MM1223	Input voltage		4.53	6.05	V
	Output voltage		4.5	6.1	V
MM1224	Input voltage		4.05	5.4	V
	Output voltage		5.34	7.12	V
MM1225	Input voltage	1.27	2.17	2.86	V
	Output voltage	1.31	2.25	2.96	V
MM1226	Input voltage	1.3	2.2	2.9	V
	Output voltage	1.4	2.23	2.88	V
MM1227	Input voltage	1.27	2.17	2.86	V
	Output voltage	1.31	2.25	2.96	V
MM1228	Input voltage	1.3	2.2	2.9	V
	Output voltage	1.4	2.23	2.88	V

Block Diagram (MM1221~MM1228)

MM1221

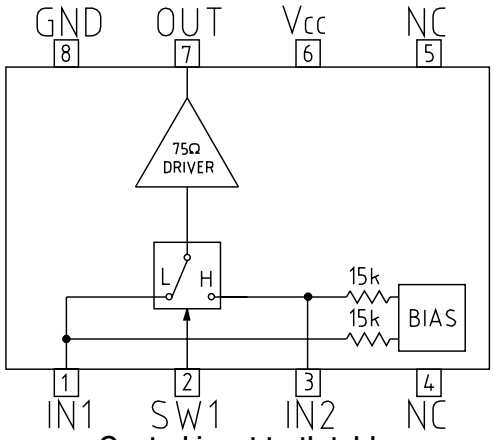

Control input truth table

SW	OUT
L	IN1
H	IN2

MM1222

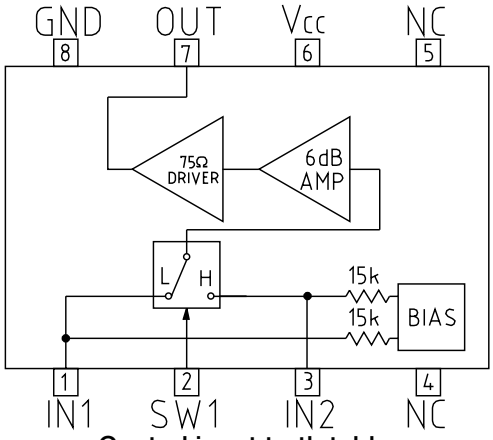

Control input truth table

SW	OUT
L	IN1
H	IN2

MM1223

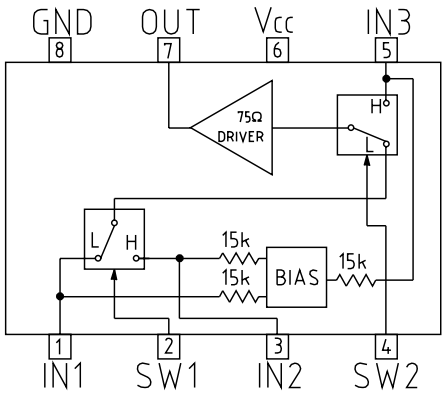

Control input truth table

SW1	SW2	OUT
L	L	IN1
H	L	IN2
L/H	H	IN3

MM1224

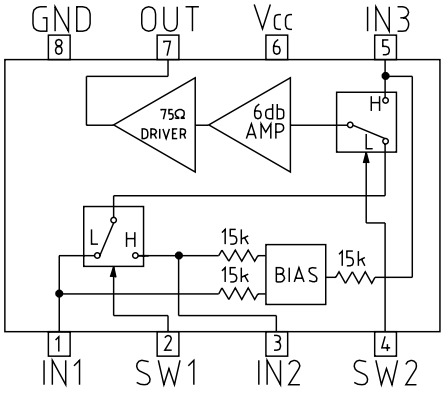

Control input truth table

SW1	SW2	OUT
L	L	IN1
H	L	IN2
L/H	H	IN3

National Semiconductor

July 2003

LP2995
DDR Termination Regulator

General Description

The LP2995 linear regulator is designed to meet the JEDEC SSTL-2 and SSTL-3 specifications for termination of DDR-SDRAM. The device contains a high-speed operational amplifier to provide excellent response to load transients. The output stage prevents shoot through while delivering 1.5A continuous current and transient peaks up to 3A in the application as required for DDR-SDRAM termination. The LP2995 also incorporates a V_{SENSE} pin to provide superior load regulation and a V_{REF} output as a reference for the chipset and DDR DIMMS.

Patents Pending

Features

- Low output voltage offset
- Works with +5v, +3.3v and 2.5v rails
- Source and sink current
- Low external component count
- No external resistors required
- Linear topology
- Available in SO-8, PSOP-8 or LLP-16 packages
- Low cost and easy to use

Applications

- DDR Termination Voltage
- SSTL-2
- SSTL-3

Typical Application Circuit

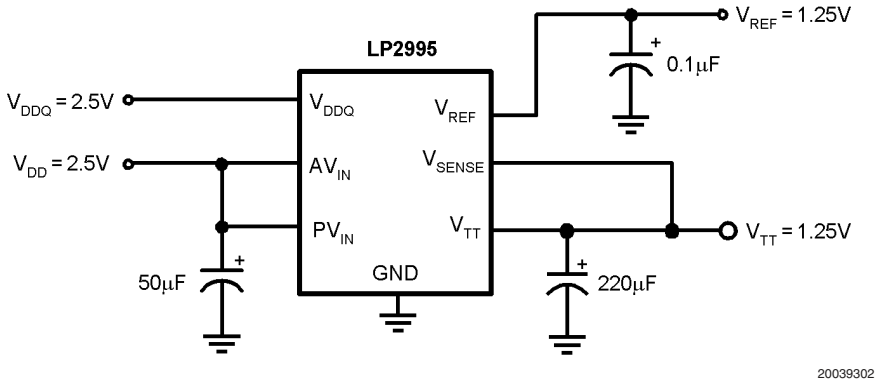

20039302

© 2003 National Semiconductor Corporation

PQxxxEZ02Z Series

Low Voltage Operation Low Power-loss Voltage Regulator

■ Features

- Low voltage operation (Minimum operating voltage: 2.35V)
  2.5V input → available 1.5 to 1.8V output
- Low dissipation current
  Dissipation current at no load: MAX.2mA
  Output OFF-state dissipation current: MAX.5μA
- Low power-loss
- Built-in overcurrent and overheat protection functions

■ Applications

- Power supplies for personal computers and peripheral equipment
- Power supplies for various electronic equipment such as DVD player or STB

■ Model Line-up

Output current (Io)	Output Voltage (Vo)		
	1.5V	1.8V	2.5V
2.0A	PQ015EZ02Z	PQ018EZ02Z	PQ025EZ02Z

■ Outline Dimensions (Unit : mm)

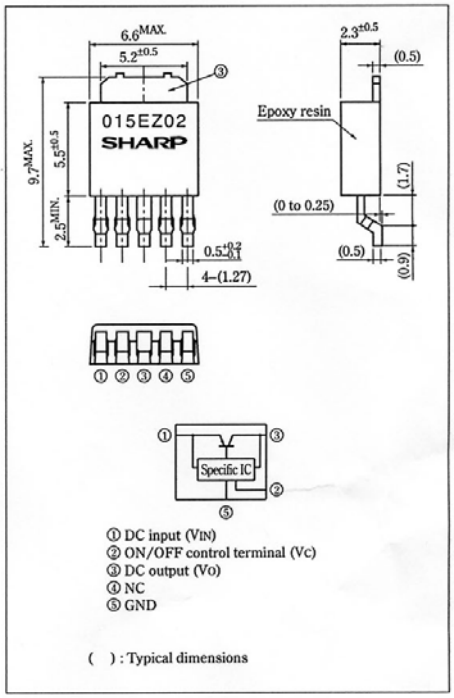

■ Absolute Maximum Ratings (Ta=25°C)

Parameter	Symbol	Rating	Unit
*1 Input voltage	V_{IN}	10	V
*1 ON/OFF control terminal voltage	V_C	10	V
Output current	Io	2	A
*2 Power dissipation	P_D	8	W
*3 Junction temperature	T_j	150	°C
Operating temperature	T_{opr}	−40 to + 85	°C
Storage temperature	T_{stg}	−40 to +150	°C
Soldering temperature	T_{sol}	260 (10s)	°C

*1 All are open except GND and applicable terminals
*2 PD:With infinite heat sink
*3 Overheat protection may operate at 125 <=Tj<=150°C

•Please refer to the chapter " Handling Precautions ".

SHARP

Notice In the absence of confirmation by device specification sheets,SHARP takes no responsibility for any defects that may occur in equipment using any SHARP devices shown in catalogs,data books,etc.Contact SHARP in order to obtain the latest device specification sheets before using any SHARP device.
Internet Internet address for Electronic Components Group http://sharp-world.com/ecg/

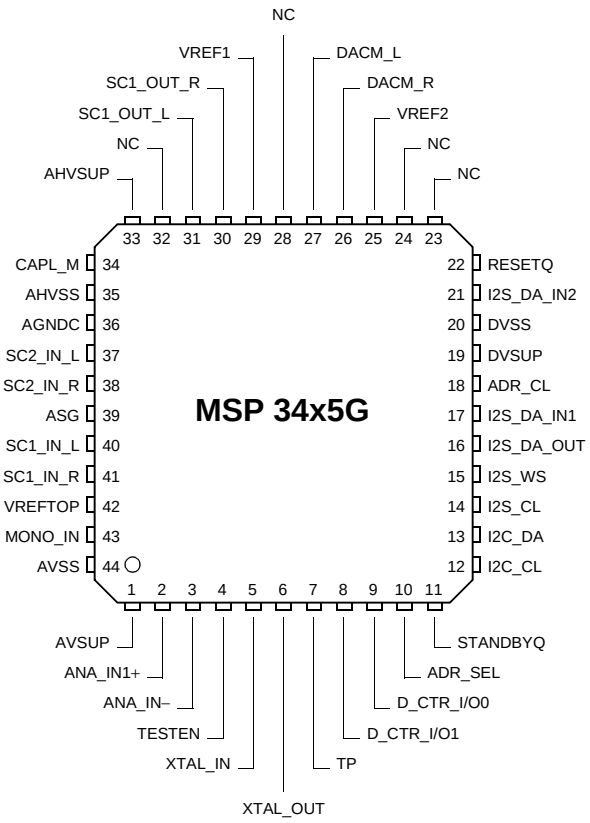

Fig. 4–10: 44-pin PMQFP package

11.Terminal for External Connection & Outline Drawing

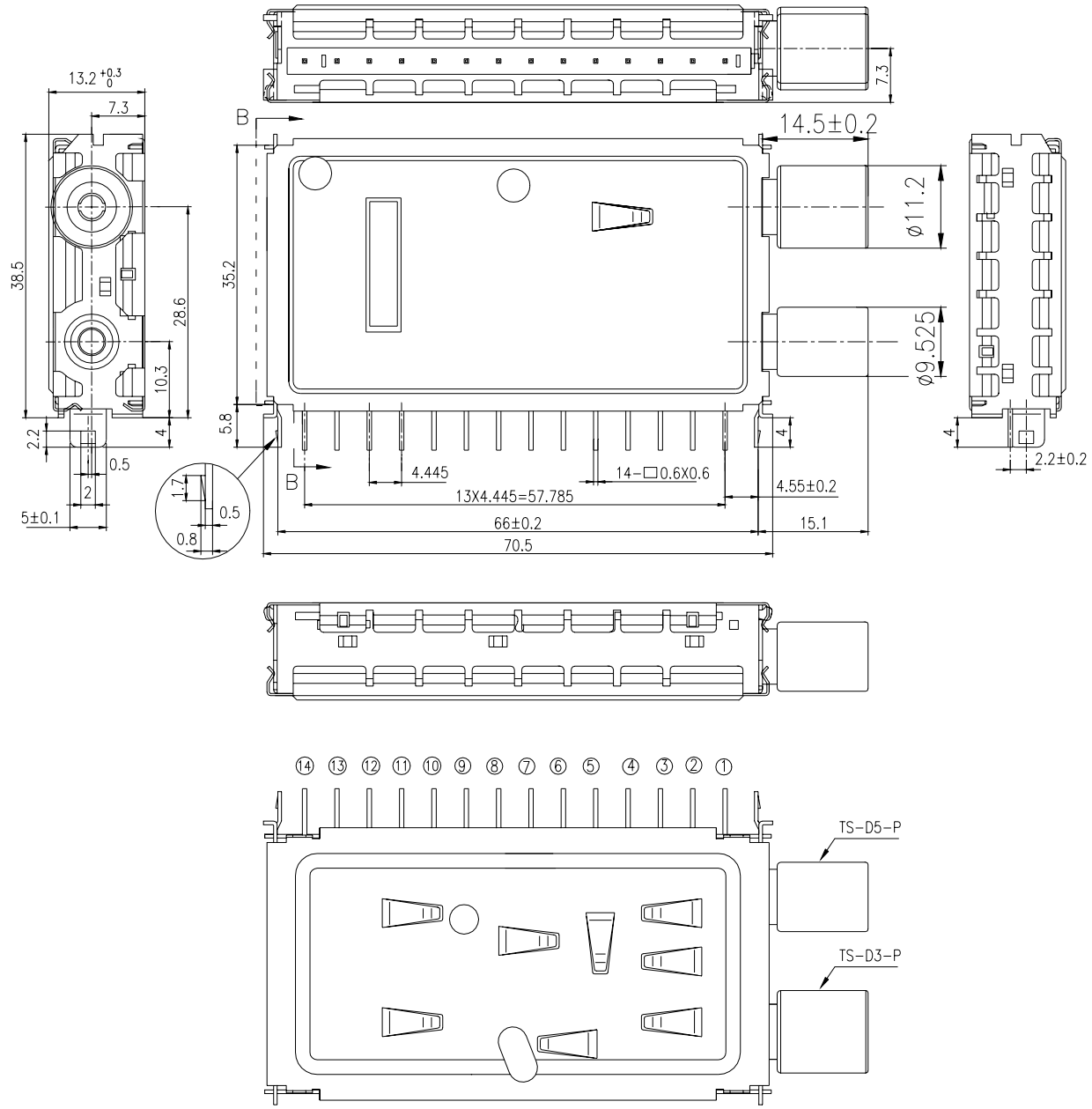

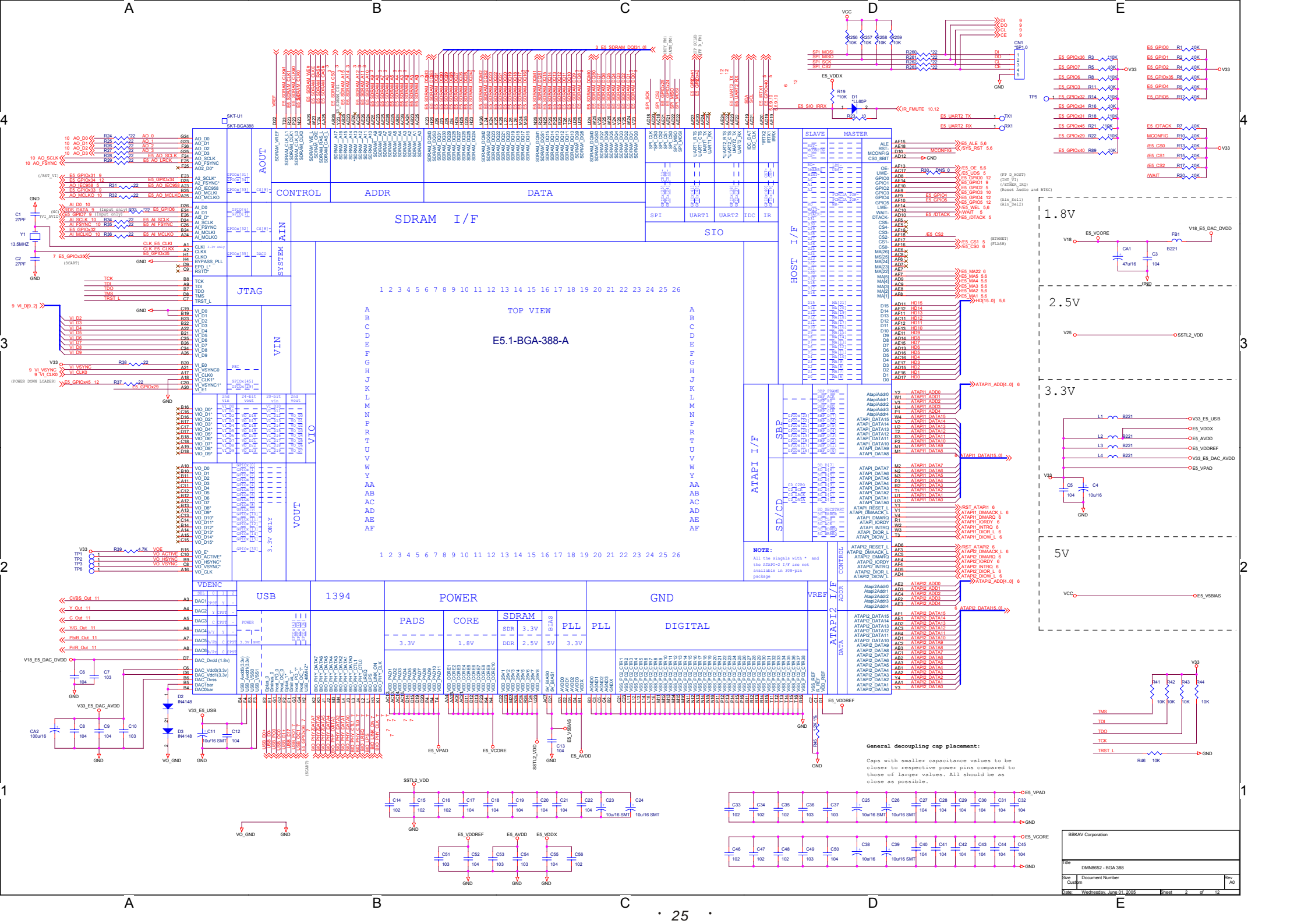
SDRAM I/F
SIO
HOST I/F
ATAPI I/F
SBP
SD/CD
AOUT
CONTROL
ADDR
DATA
SPI
UART1
UART2
IDC
IR
AIN
SYSTEM
JTAG
VIN
VOUT
VTO
TOP VIEW
E5.1-BGA-388-A
SLAVE
MASTER
USB
1394
POWER
GND
VDENC
PADS
CORE
SDRAM
PLL
DIGITAL
1.8V
2.5V
3.3V
5V
NOTE:
All the singals with * and the ATAPI-2 I/F are not available in 308-pin package
General decoupling cap placement:
Caps with smaller capacitance values to be closer to respective power pins compared to those of larger values. All should be as close as possible.
BBKAV Corporation
DMN8652 - BGA 388
Wednesday, June 01, 2005

TERMINATION AT E5.1

TERMINATION AT DDR

The VTT side of the terminaton resistors should be placed on a wide VTT island on the surface layer. The island is located at each end of the bus, so it does not interfere with the signal routing.

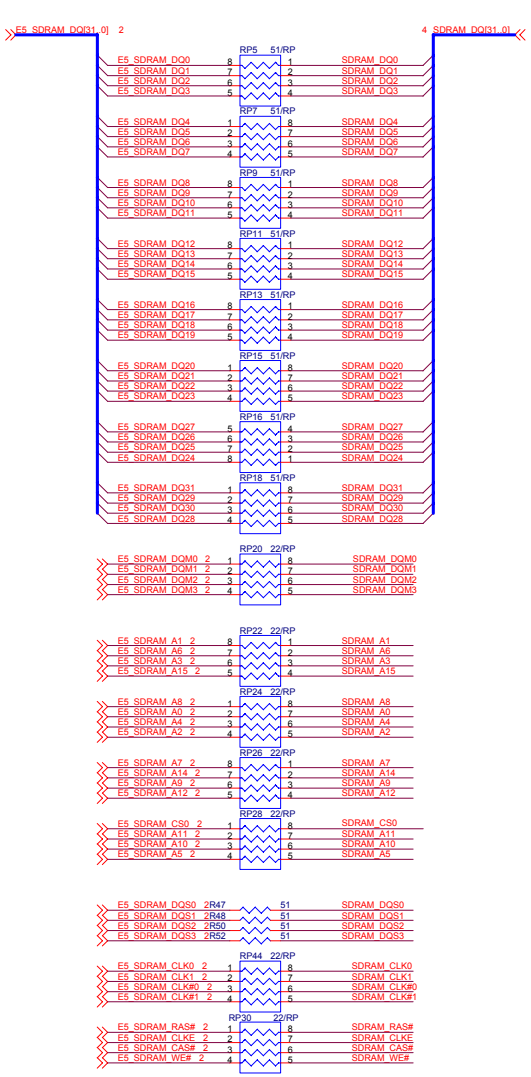

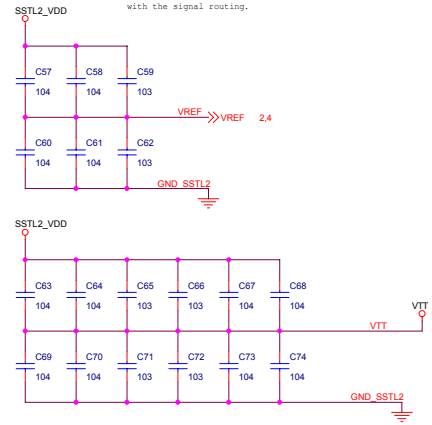

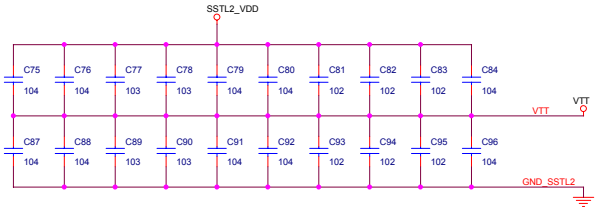

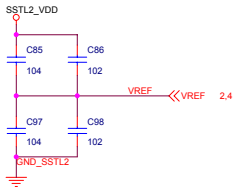

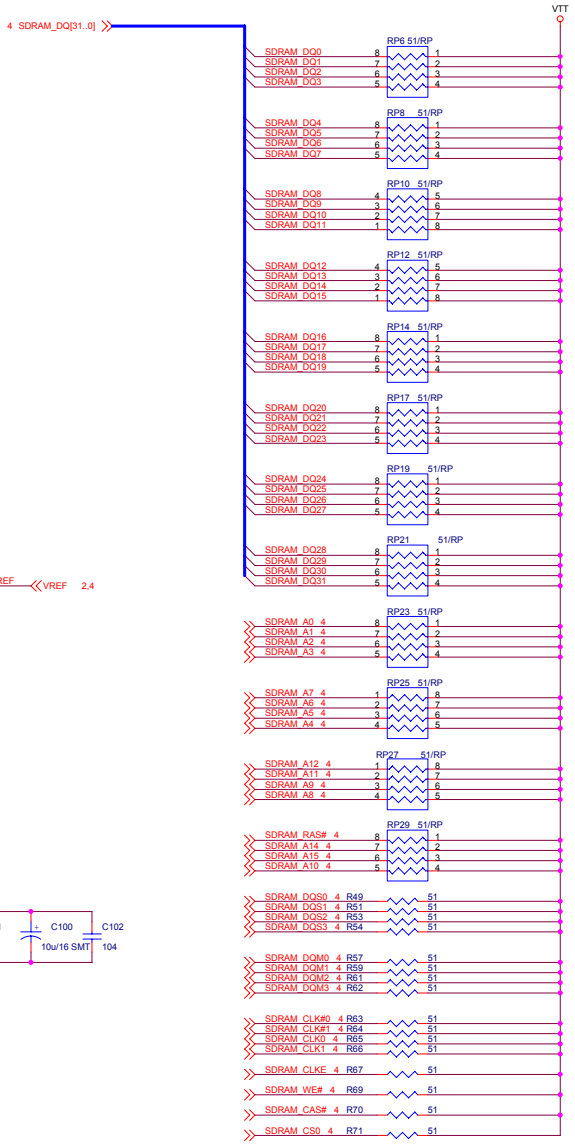

DDR TERMINATION VOLTAGE REGULATOR

VREF needs to be decoupled to both SSTL2_VDD and SSTL2_GND with balanced decoupling capacitors.

VREF should be routed over a reference plane and isolated, and possibly shielded with both SSTL2_VDD and SSTL2_GND

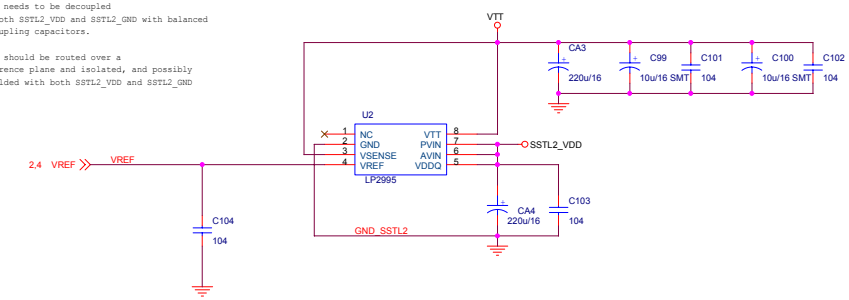

BBKAV Corporation			
Title: DDR TERMINATION			
Size: C	Document Number		Rev: A0
Date: Wednesday, June 01, 2005	Sheet 3 of 12		

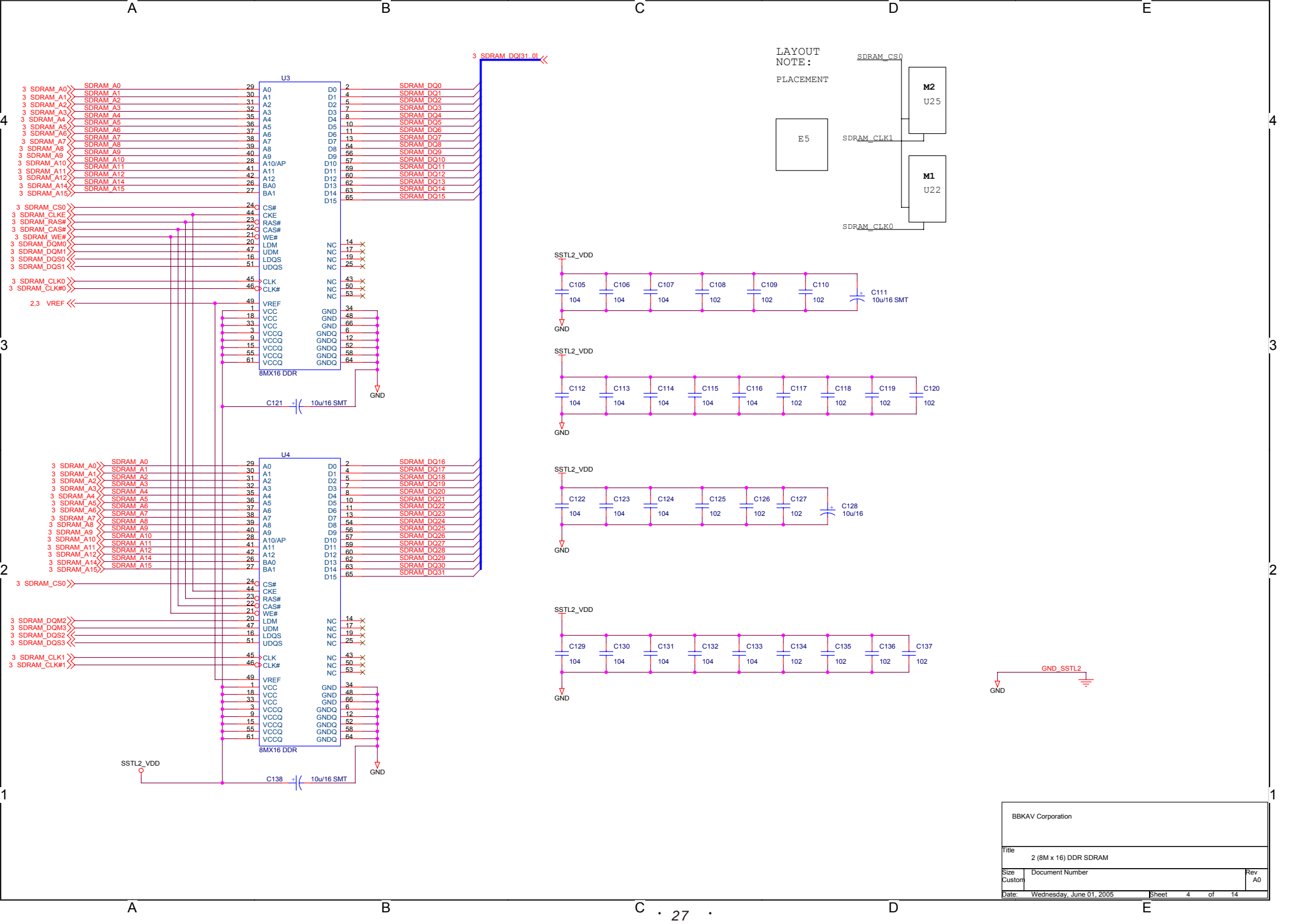

BBKAV Corporation

Title: 2 (8M x 16) DDR SDRAM

Size: Custom | Document Number | Rev: A0

Date: Wednesday, June 01, 2005 | Sheet 4 of 14

E-Link III Connector

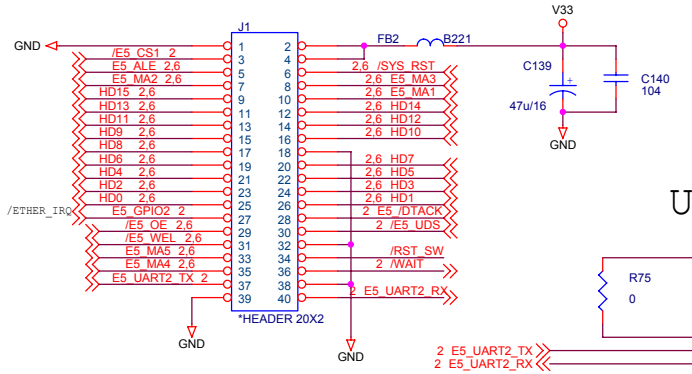

UART

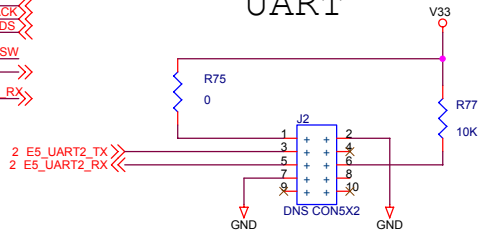

RESET CIRCUITRY

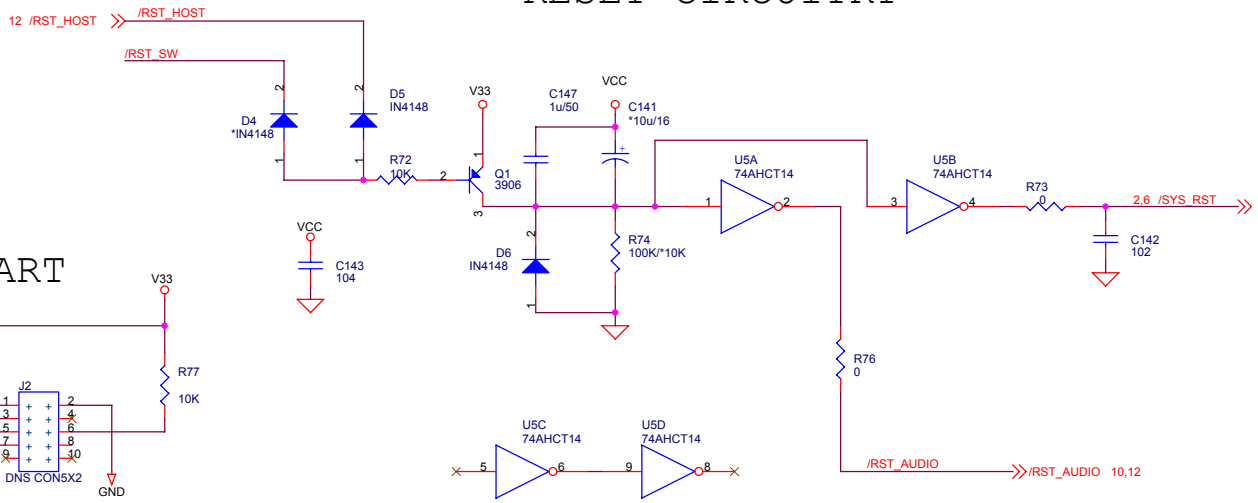

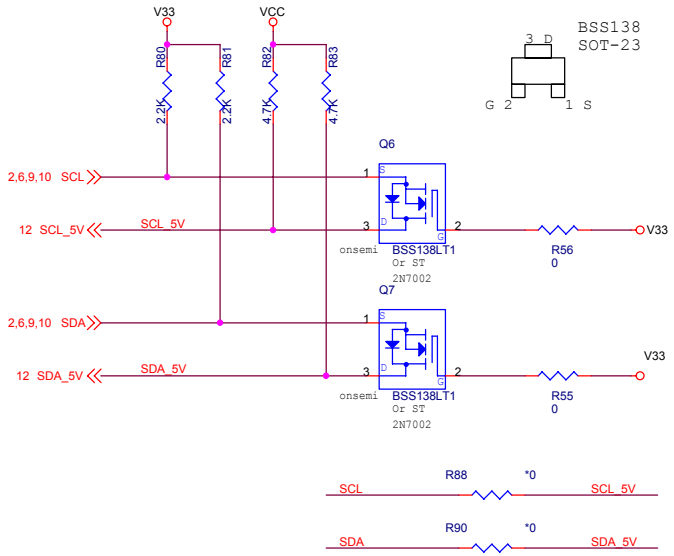

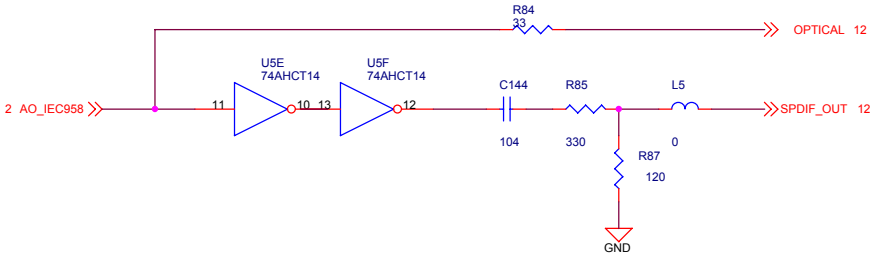

BBKAV Corporation		
Title: FP, RST, IR, AV IO/ELink-3 CON, UART		
Size: A3	Document Number	Rev: A0
Date: Wednesday, June 01, 2005	Sheet 5 of 14	

IR EMITTER

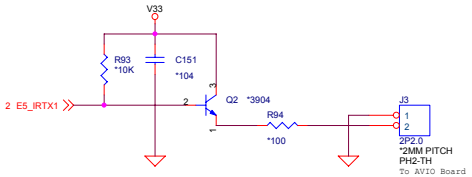

EEPROM

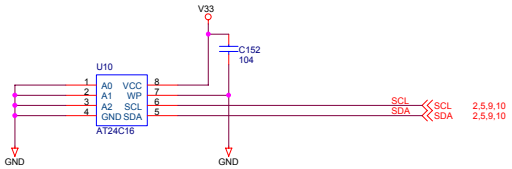

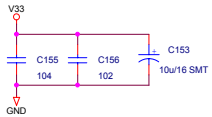

FLASH MEMORY(2 or 4 or 8 Mb)

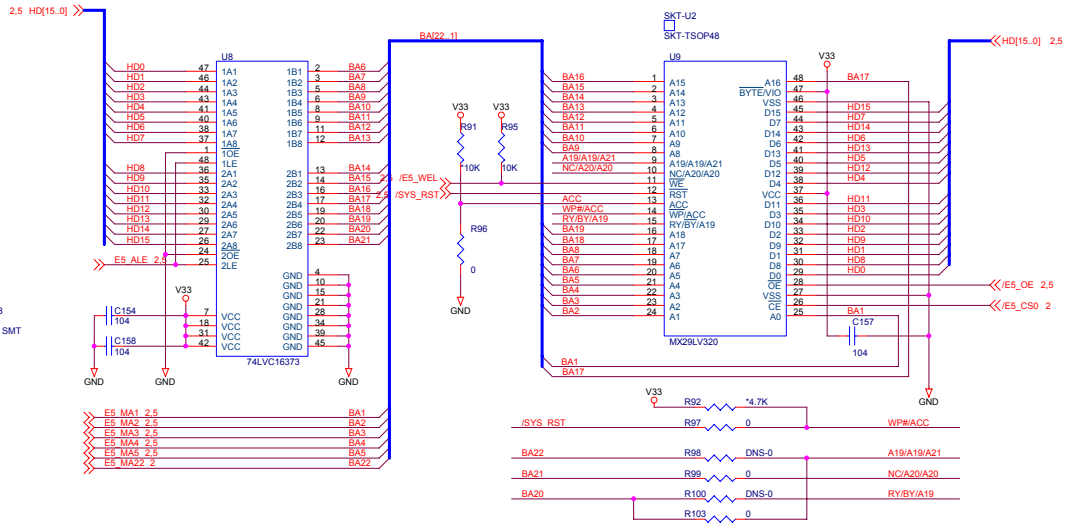

ATAPI1 (LOADER)

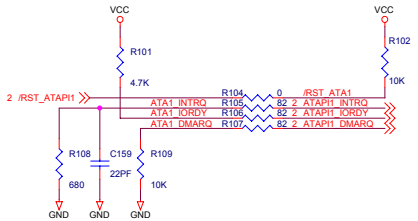

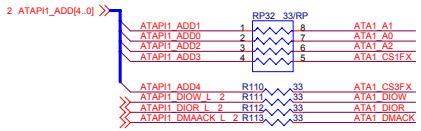

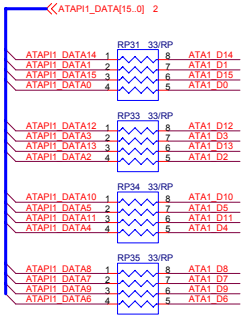

Size	Stuff	Not Stuff
1MB		R98,R99,R100,R103
2MB(Default)	R103	R98,R99,R100
4MB	R99,R103	R98,R100
8MB	R98,R99,R100	R103

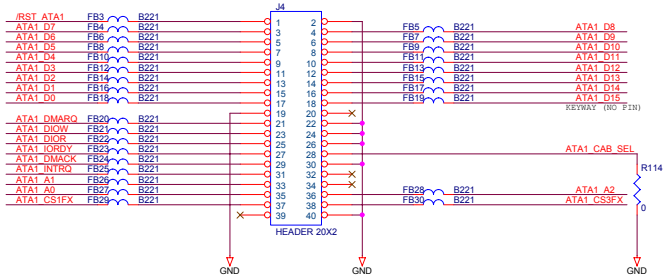

ATAPI2 (HD)

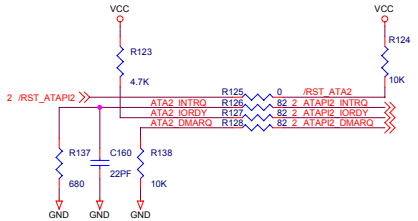

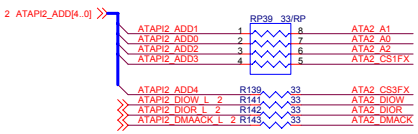

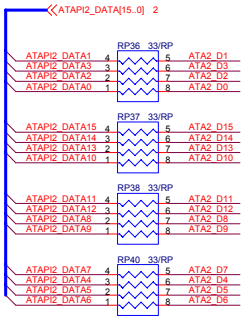

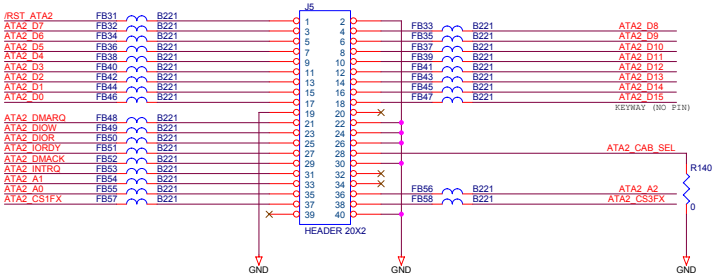

HOST Read

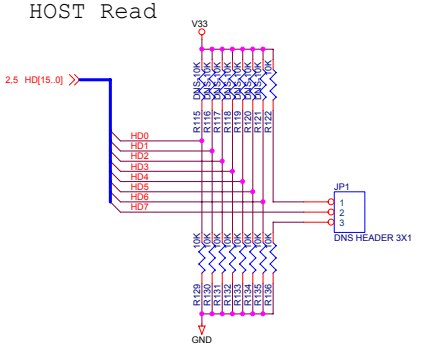

HD[1:0]	00	Samsung - K4H281638D-TCB3
	01	Micron - MT46V8M16-55
	10	ESMT - M13S128168A-6T
	11	Nanya
HD[3:2]	10	64Mb DDR SDRAM
	00	128Mb DDR SDRAM
	01	256Mb DDR SDRAM
	11	Reserve
HD[7]	0	Normal Mode (Jumper 1-2)
	1	Debuge Mode (Jumper 2-3)

BBKAV Corporation

Title: FLASH, ATA, EEPROM

Size: C | Document Number | Rev: A0

Date: Wednesday, June 01, 2005 | Sheet 6 of 12

1394 FIREWIRE PHY

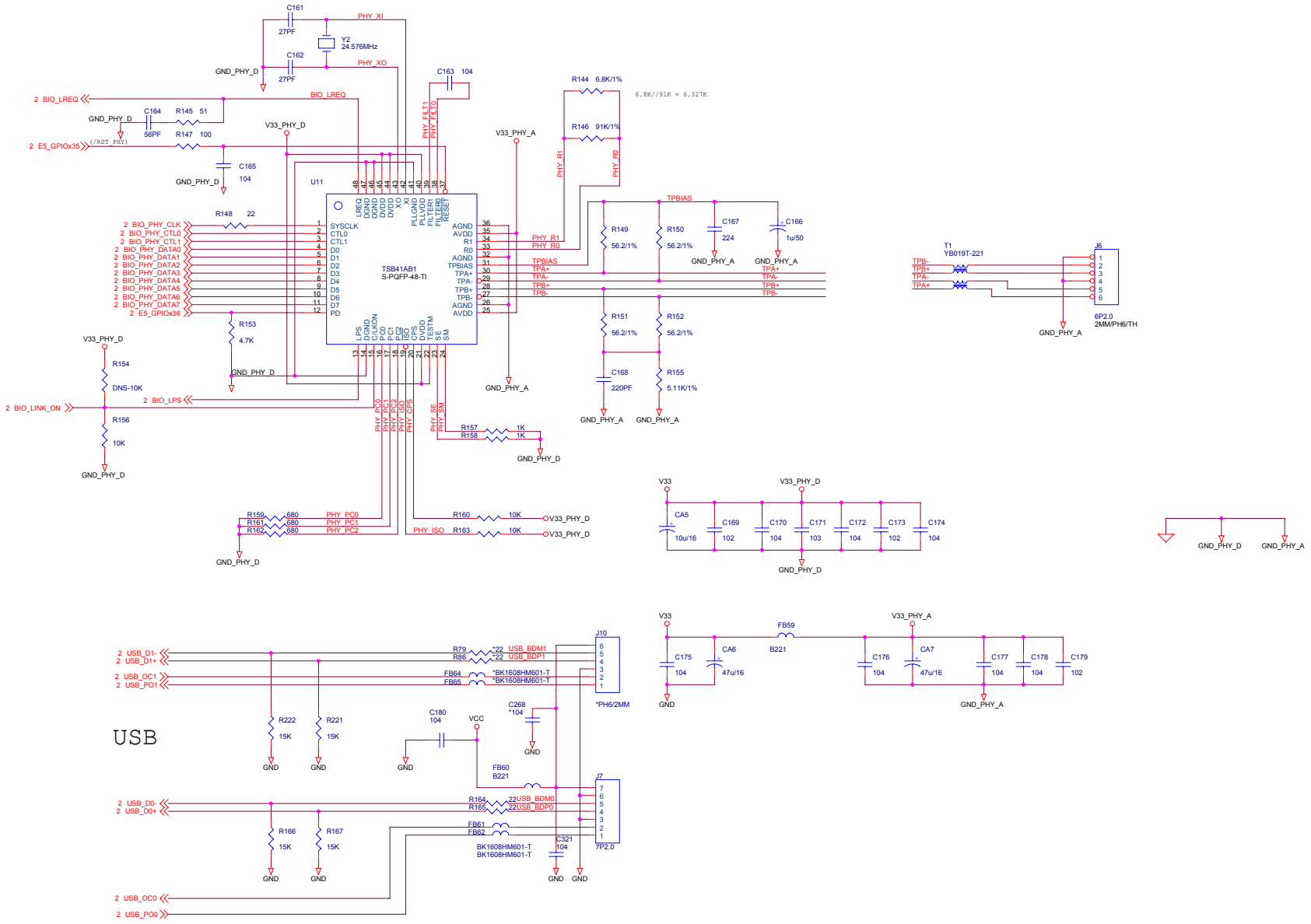

BBKAV Corporation	
Title	1394 PHY &USB
Size C	Document Number
Rev	A0
Date:	Wednesday, June 01, 2005
Sheet	7 of 12

MAIN POWER REG

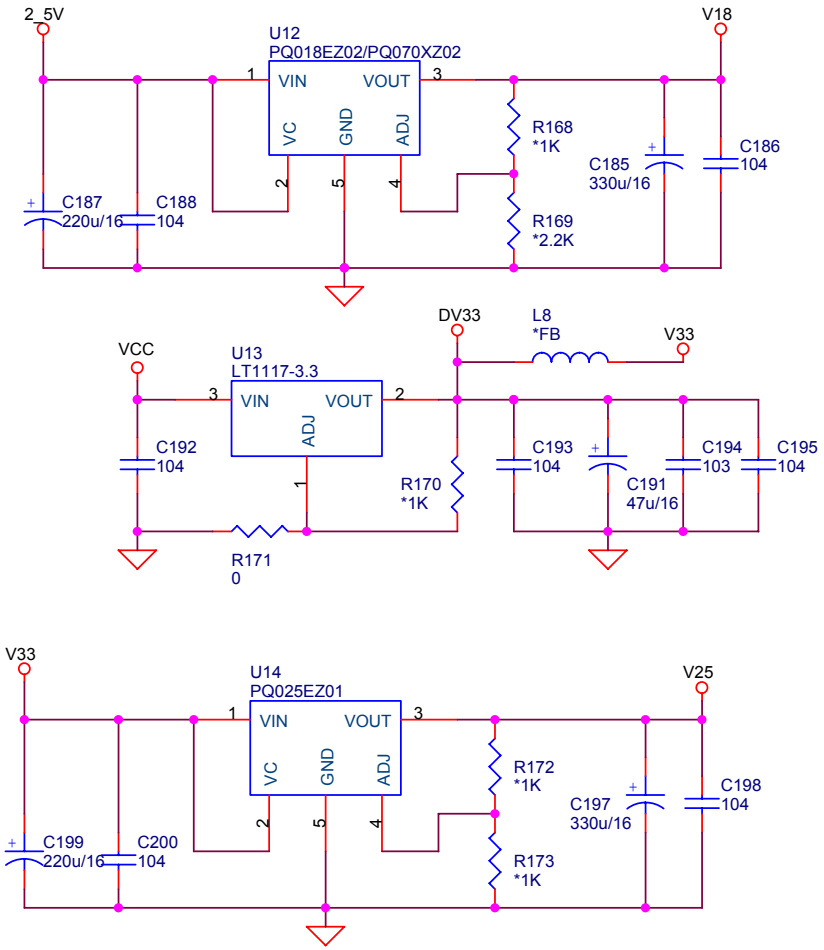

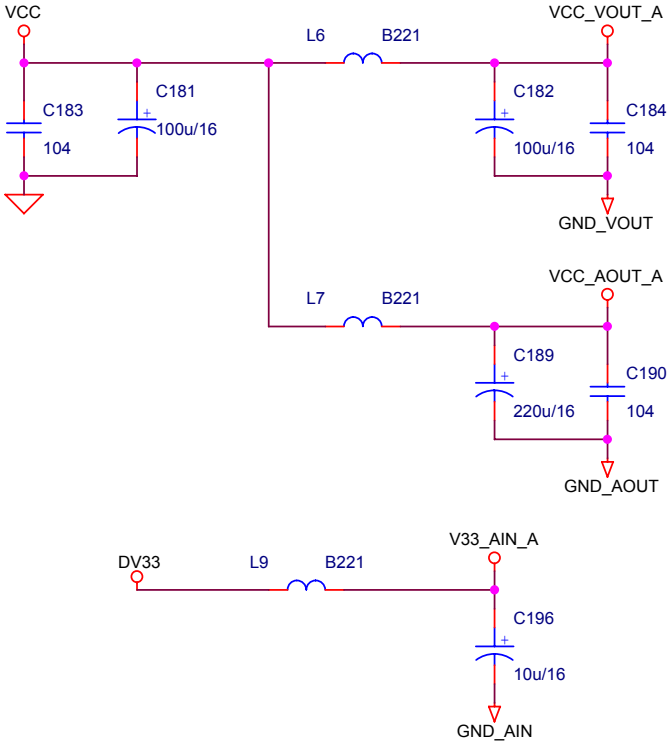

BBKAV Corporation		
Title: POWER CONN		
Size: A4	Document Number	Rev: A0
Date: Wednesday, June 01, 2005	Sheet 8 of 12	

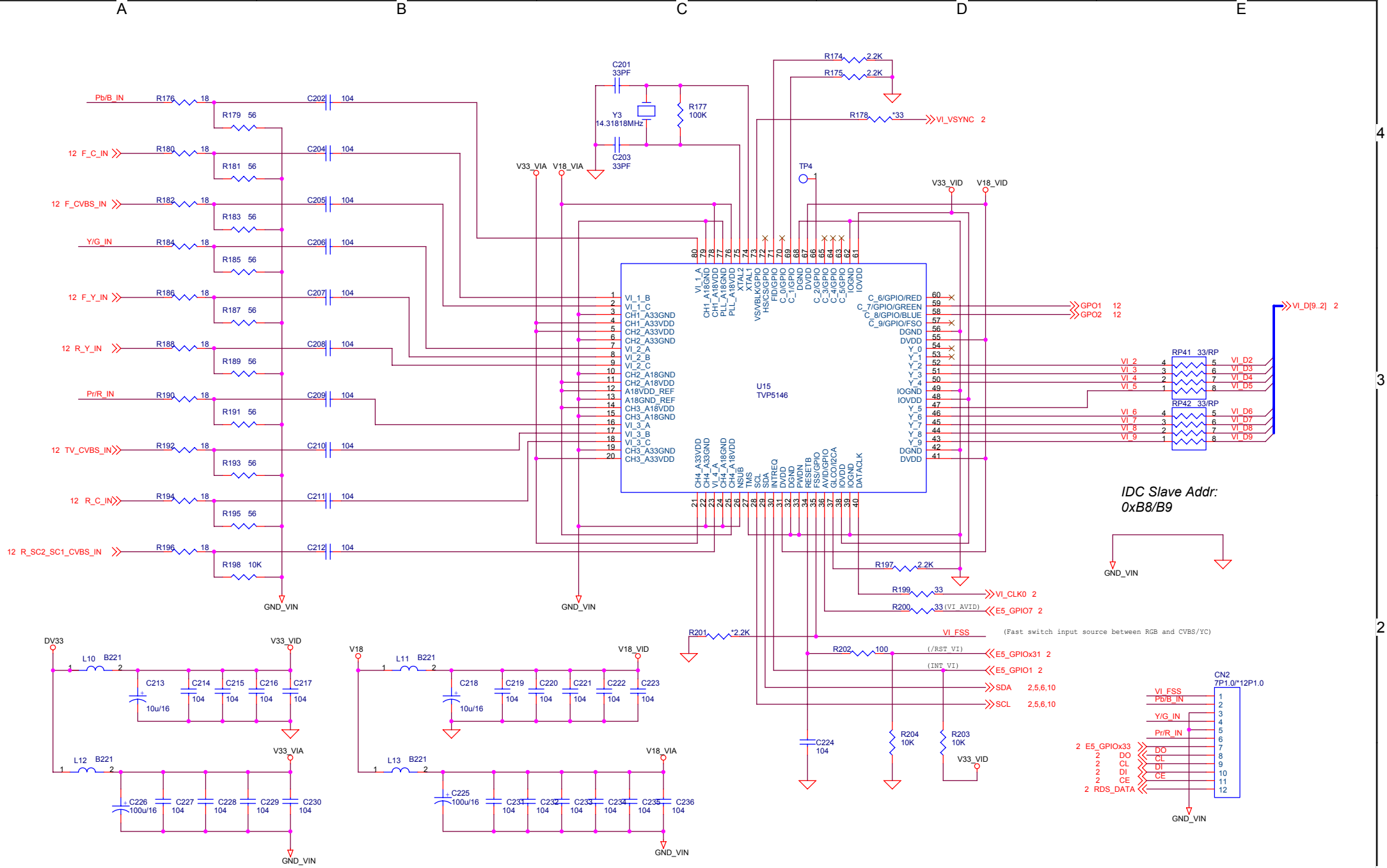

BBKAV Corporation			
Title: VIDEO IN			
Size: A3	Document Number		Rev: A0
Date: Wednesday, June 01, 2005		Sheet 9 of 12	

Audio Out (2 & 6 ch)

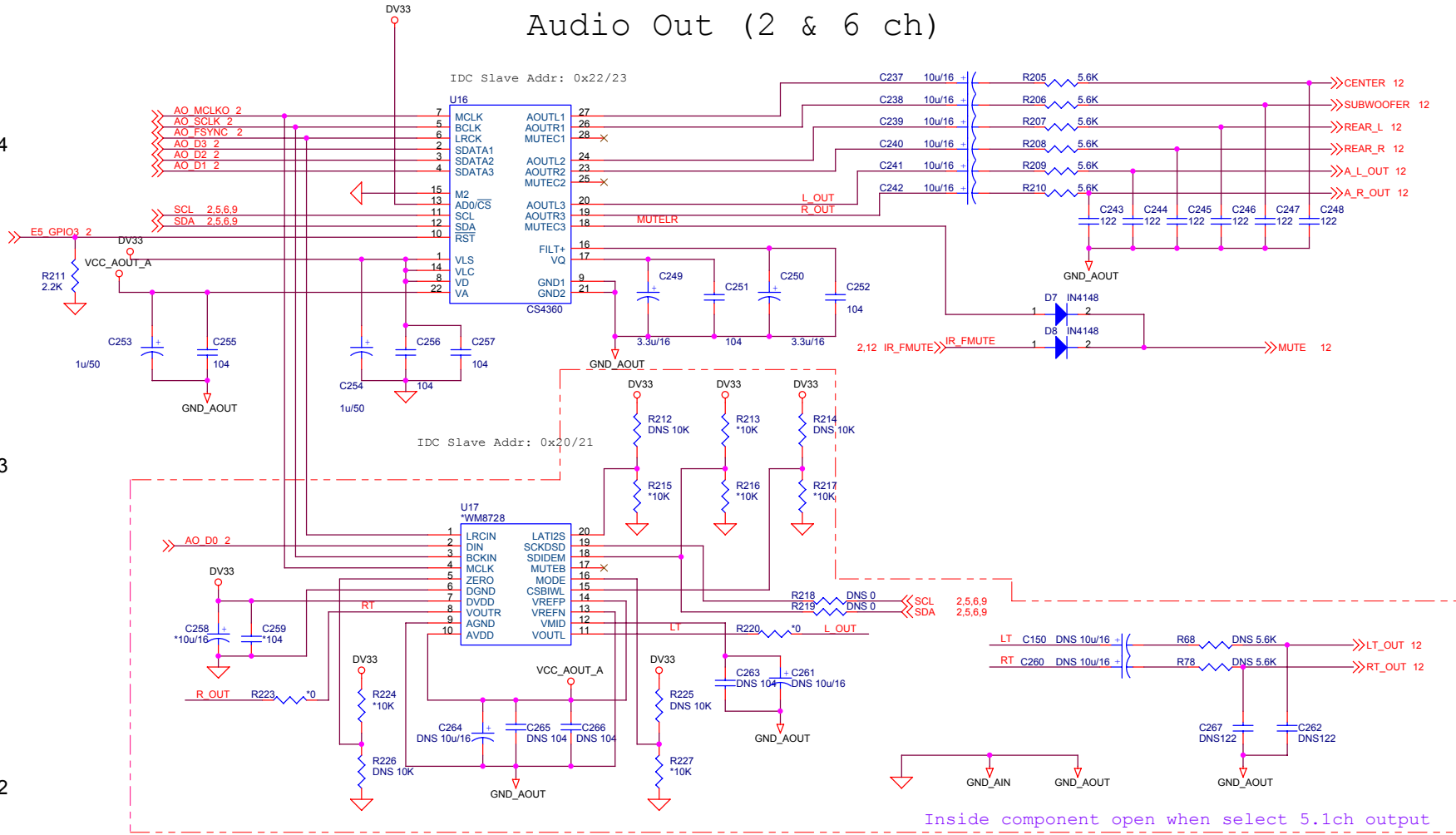

Audio In

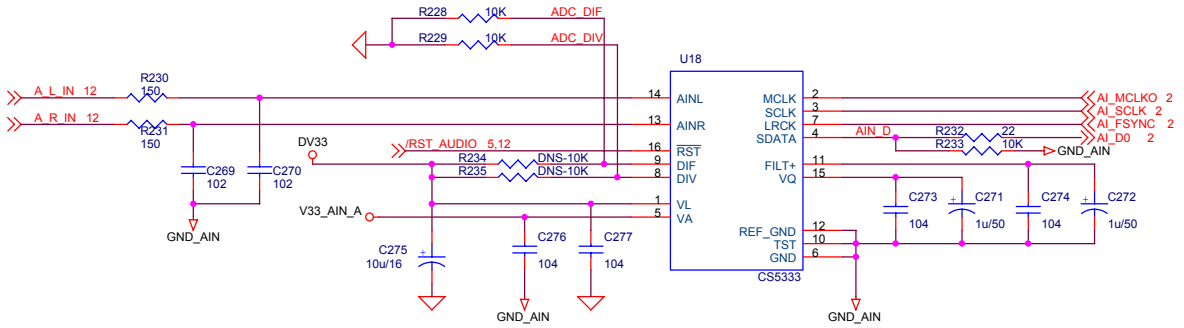

Title		
Size A3	Document Number <Doc>	Rev
Date: Wednesday, June 01, 2005	Sheet 10 of 12	

BBKAV Corporation

Audio ADC/DAC

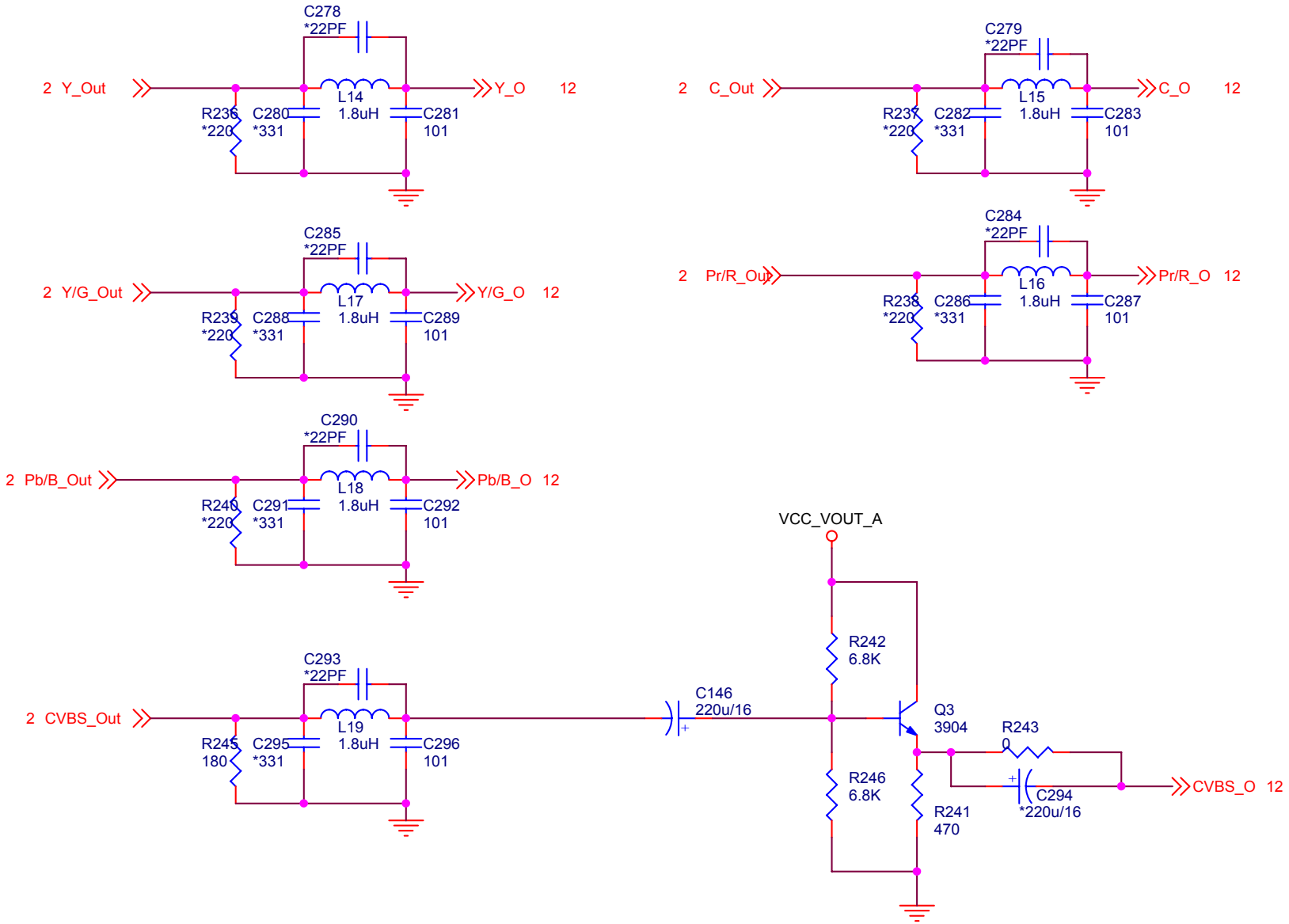

Title <Title>		
Size A	Document Number <Doc>	Rev <RevCode>
Date: Wednesday, June 01, 2005	Sheet 11 of 12	

FRONT PANEL INTERFACE

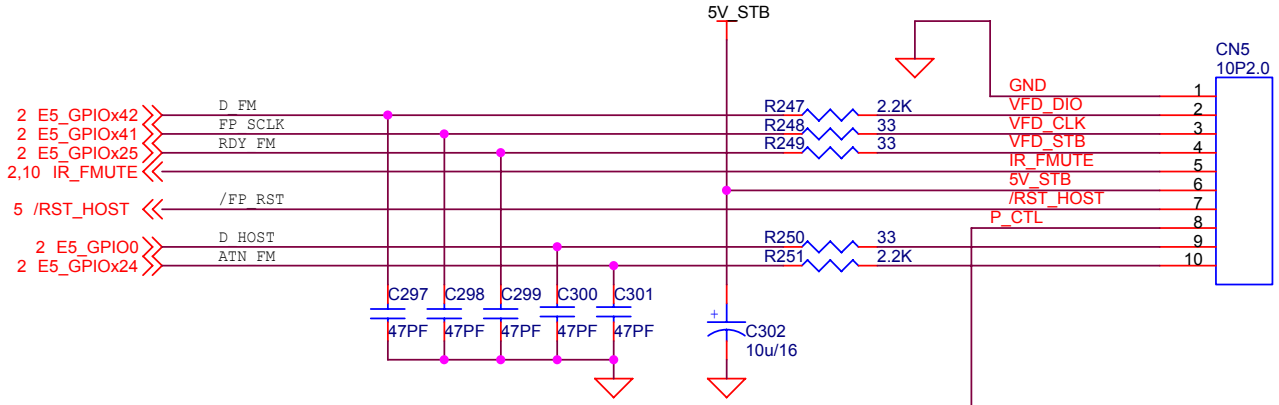

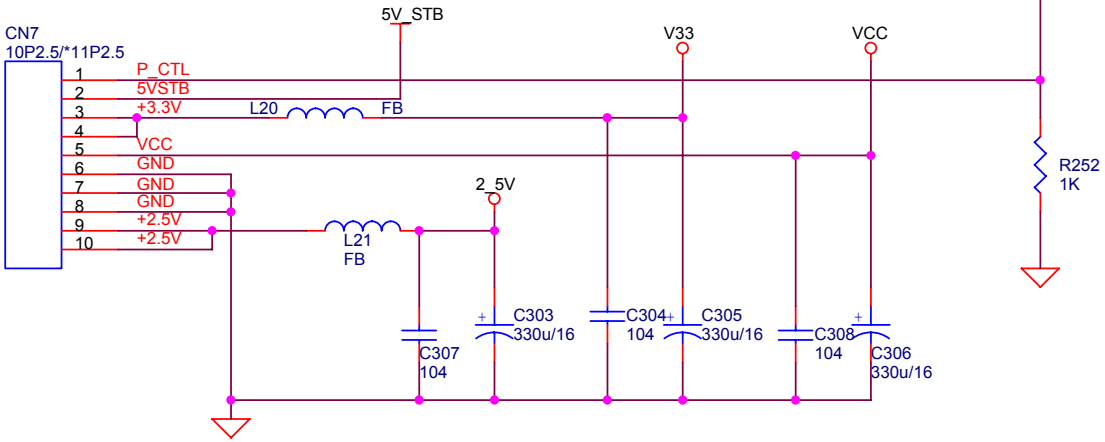

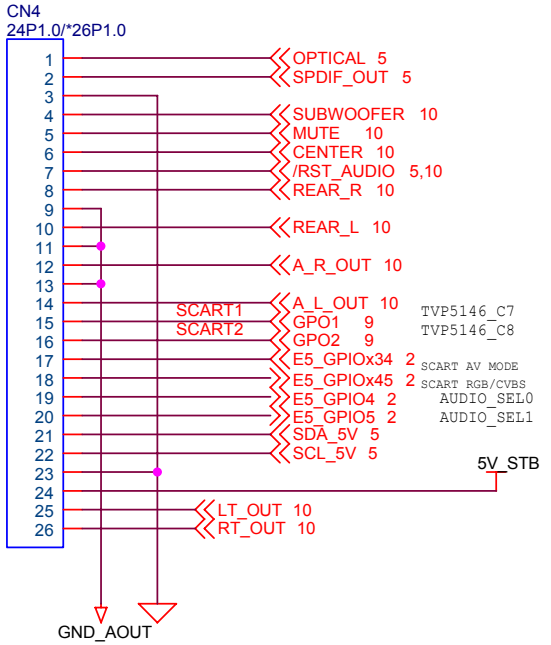

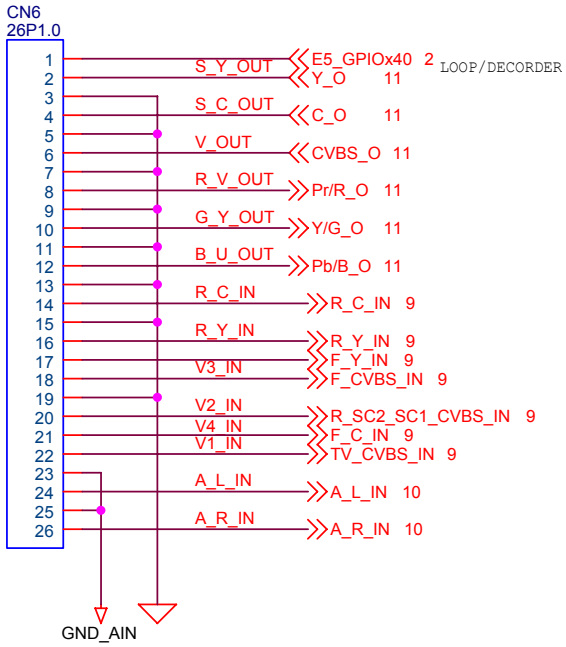

A/V I/O Connector

Title	<Title>	
Size A4	Document Number <Doc>	Rev <RevCode>
Date: Wednesday, June 01, 2005	Sheet 12 of 12	

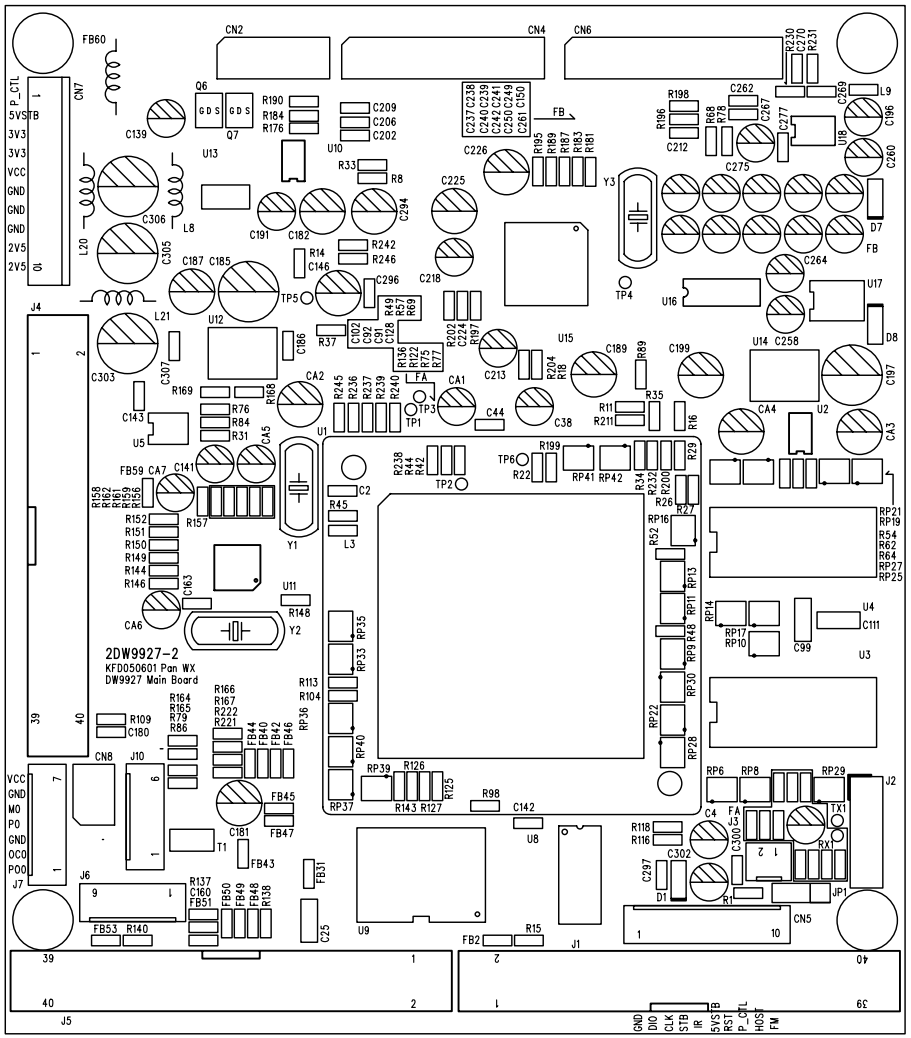
2DW9927-2
KFD050601 Pan WX
DW9927 Main Board

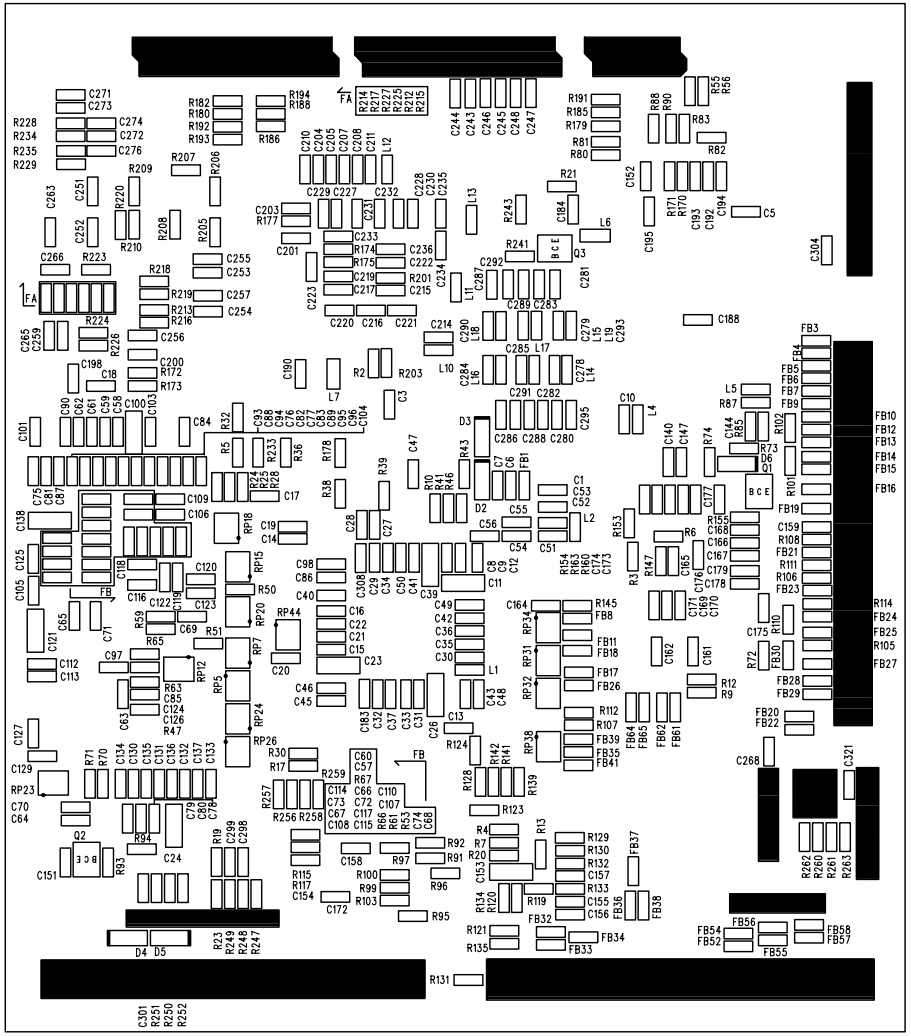

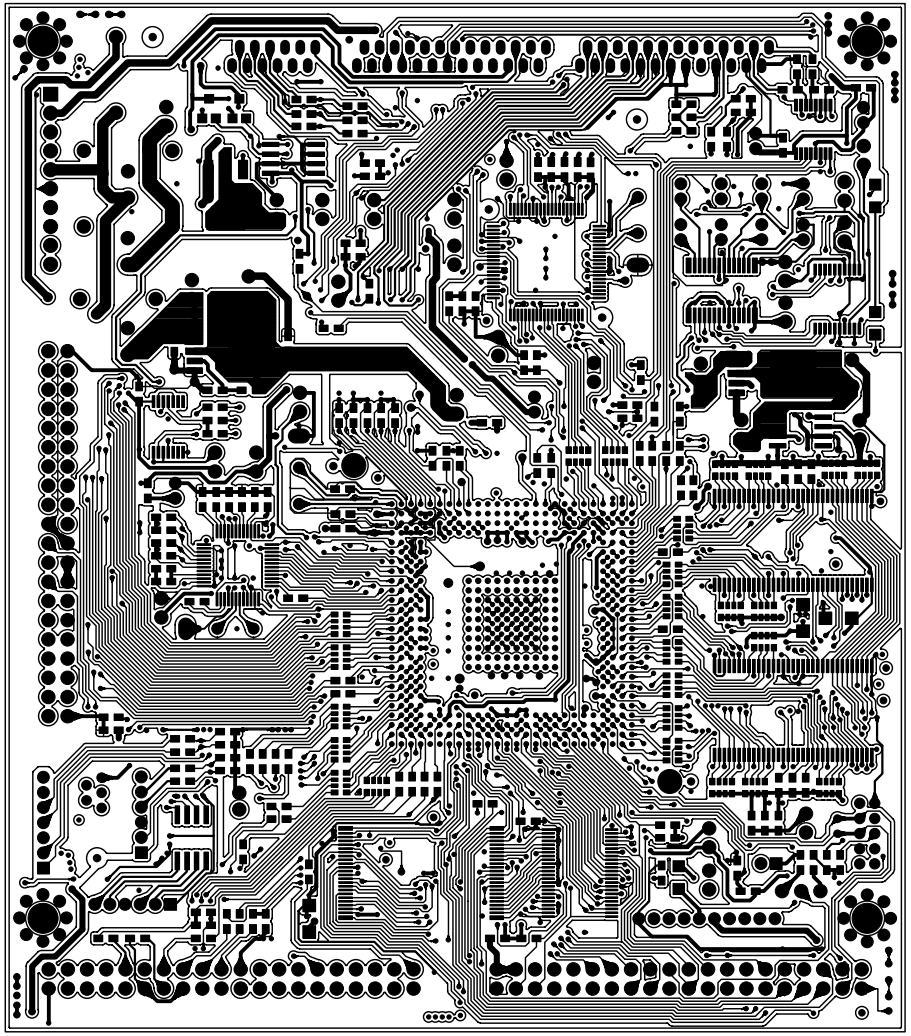

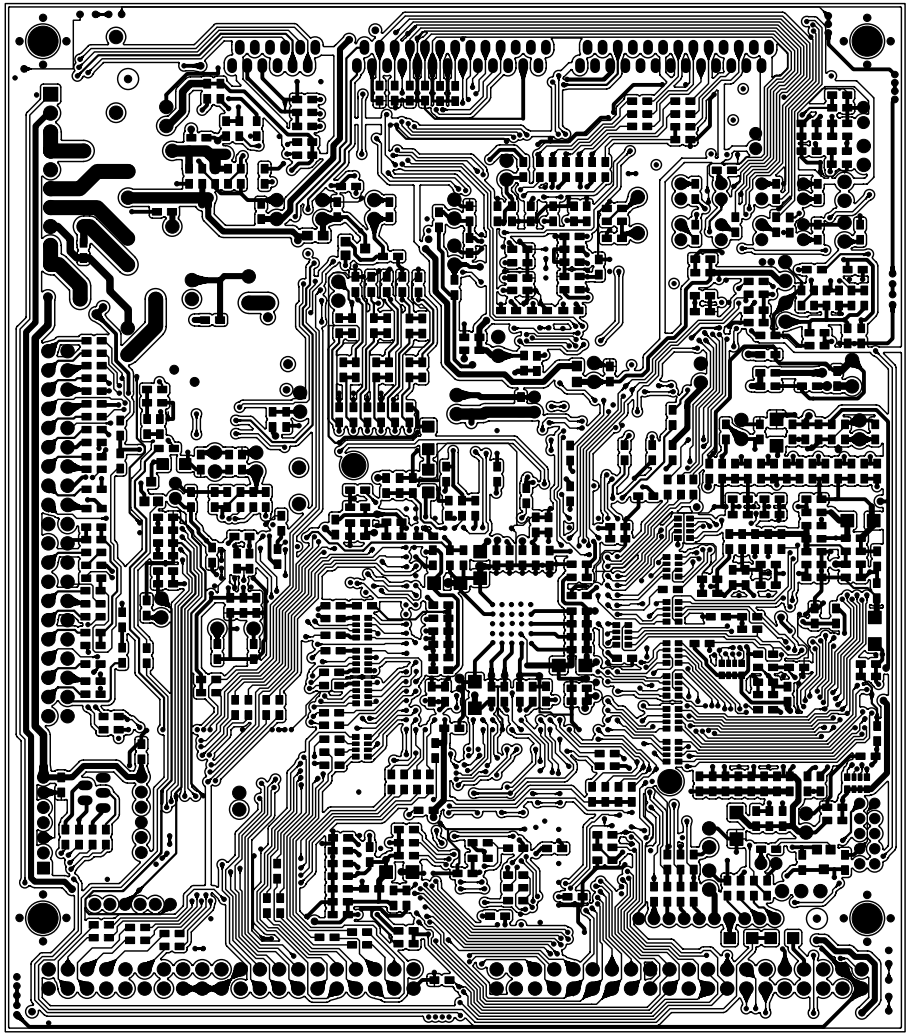

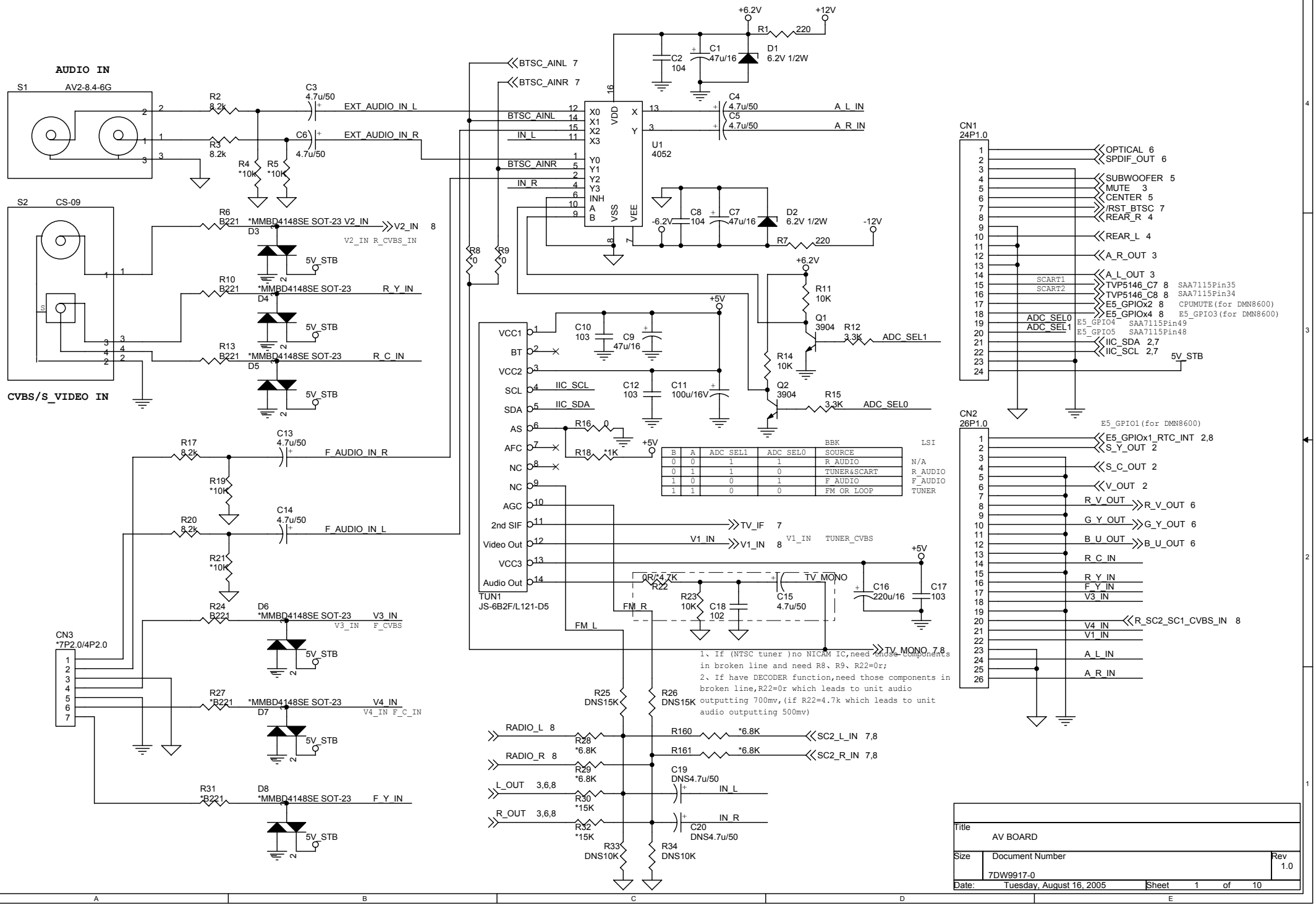
AUDIO IN
S1 AV2-8.4-6G
S2 CS-09
CVBS/S_VIDEO IN
EXT_AUDIO_IN_L
EXT_AUDIO_IN_R
F_AUDIO_IN_R
F_AUDIO_IN_L
V2_IN R_CVBS_IN
R_Y_IN
R_C_IN
F_CVBS
F_C_IN
F_Y_IN
CN3 *7P2.0/4P2.0
U1 4052
TUN1 JS-6B2F/L121-D5
BTSC_AINL 7
BTSC_AINR 7
IIC_SCL
IIC_SDA
TV_IF 7
V1_IN 8
TUNER_CVBS
TV_MONO 7,8
FM_R
FM_L
RADIO_L 8
RADIO_R 8
L_OUT 3,6,8
R_OUT 3,6,8
SC2_L_IN 7,8
SC2_R_IN 7,8
A_L_IN
A_R_IN
+6.2V
+12V
-6.2V
-12V
+5V
5V_STB
ADC_SEL1
ADC_SEL0
BBK
LSI
B A ADC_SEL1 ADC_SEL0 SOURCE
0 0 1 1 R_AUDIO N/A
0 1 1 0 TUNER&SCART R_AUDIO
1 0 0 1 F_AUDIO F_AUDIO
1 1 0 0 FM OR LOOP TUNER
1、If (NTSC tuner)no NICAM IC,need those components in broken line and need R8、R9、R22=0r;
2、If have DECODER function,need those components in broken line,R22=0r which leads to unit audio outputting 700mv,(if R22=4.7k which leads to unit audio outputting 500mv)
CN1 24P1.0
OPTICAL 6
SPDIF_OUT 6
SUBWOOFER 5
MUTE 3
CENTER 5
/RST_BTSC 7
REAR_R 4
REAR_L 4
A_R_OUT 3
A_L_OUT 3
SCART1
SCART2
TVP5146_C7 8 SAA7115Pin35
TVP5146_C8 8 SAA7115Pin34
E5_GPIOx2 8 CPUMUTE(for DMN8600)
E5_GPIOx4 8 E5_GPIO3(for DMN8600)
E5_GPIO4 SAA7115Pin49
E5_GPIO5 SAA7115Pin48
IIC_SDA 2,7
IIC_SCL 2,7
CN2 26P1.0
E5_GPIO1(for DMN8600)
E5_GPIOx1_RTC_INT 2,8
S_Y_OUT 2
S_C_OUT 2
V_OUT 2
R_V_OUT
G_Y_OUT
B_U_OUT
R_C_IN
R_Y_IN
F_Y_IN
V3_IN
R_SC2_SC1_CVBS_IN 8
V4_IN
V1_IN
A_L_IN
A_R_IN
Title AV BOARD
Size Document Number 7DW9917-0
Rev 1.0
Date: Tuesday, August 16, 2005
Sheet 1 of 10

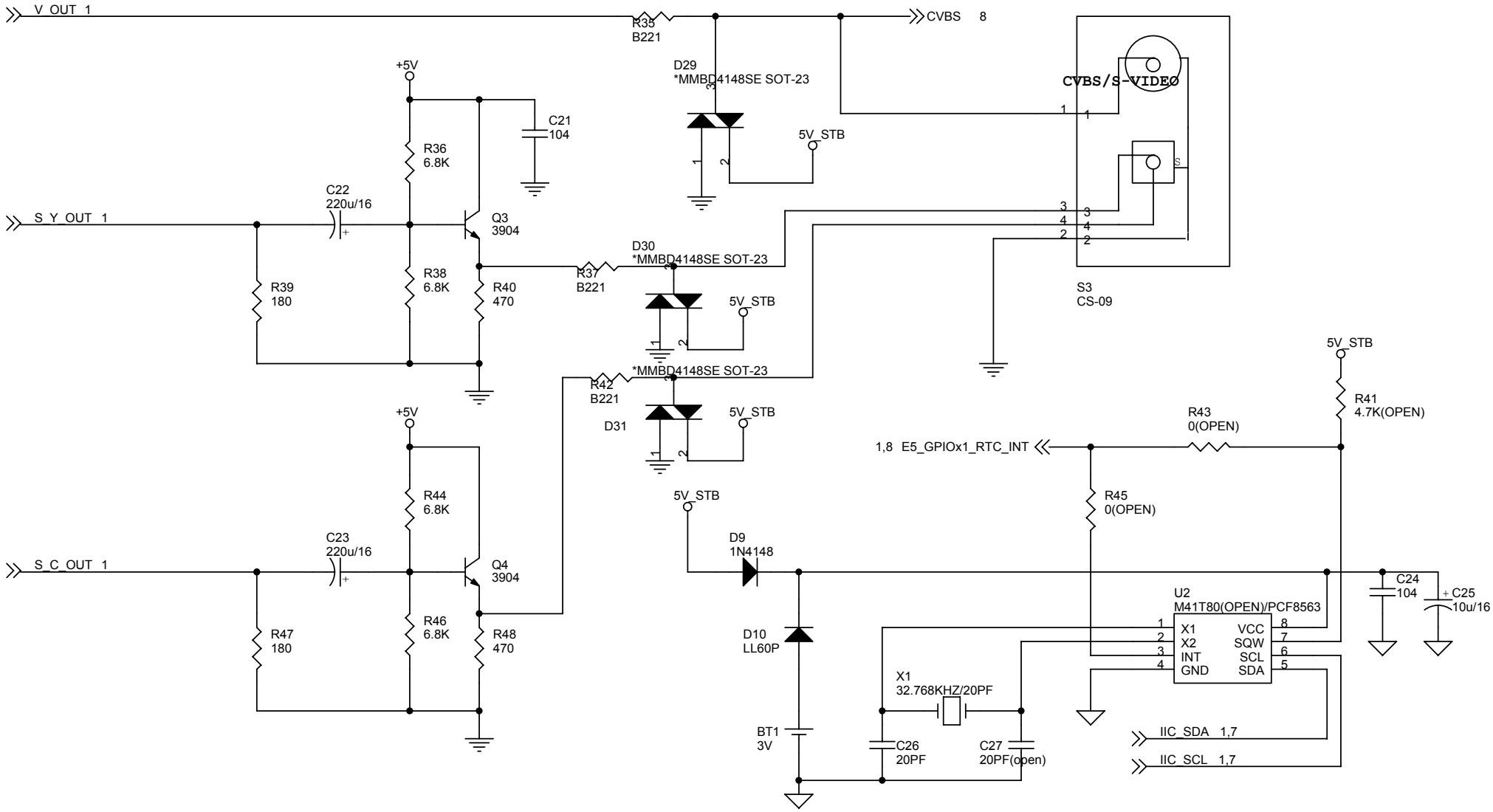

Title	<Title>	
Size A4	Document Number <Doc>	Rev 1.0
Date: Tuesday, August 16, 2005	Sheet 2 of 10	

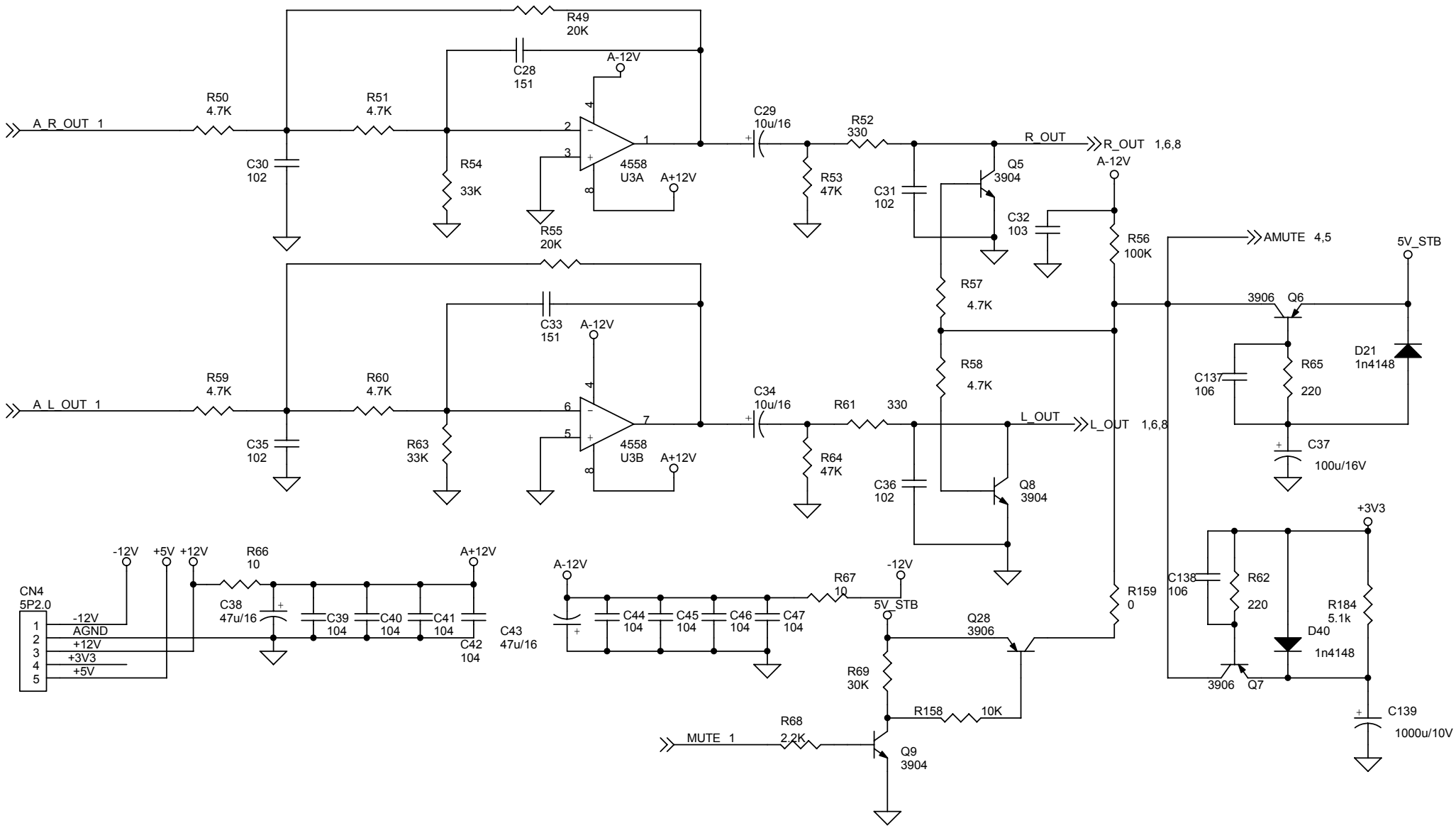

Title	<Title>	
Size A4	Document Number <Doc>	Rev 1.0
Date: Tuesday, August 16, 2005	Sheet 3 of 10	

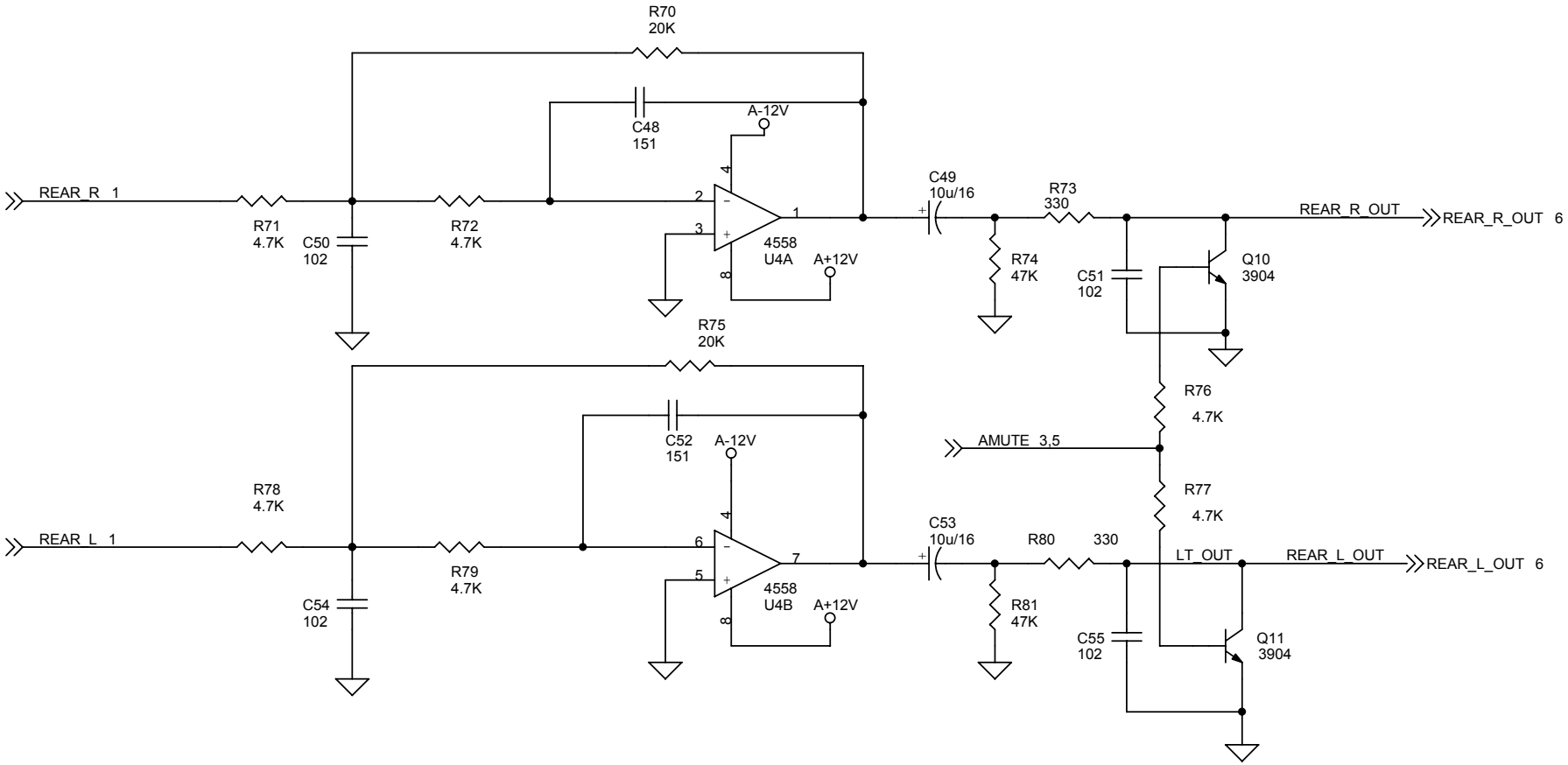

Title <Title>		
Size A4	Document Number <Doc>	Rev 1.0
Date: Tuesday, August 16, 2005	Sheet 4 of 10	

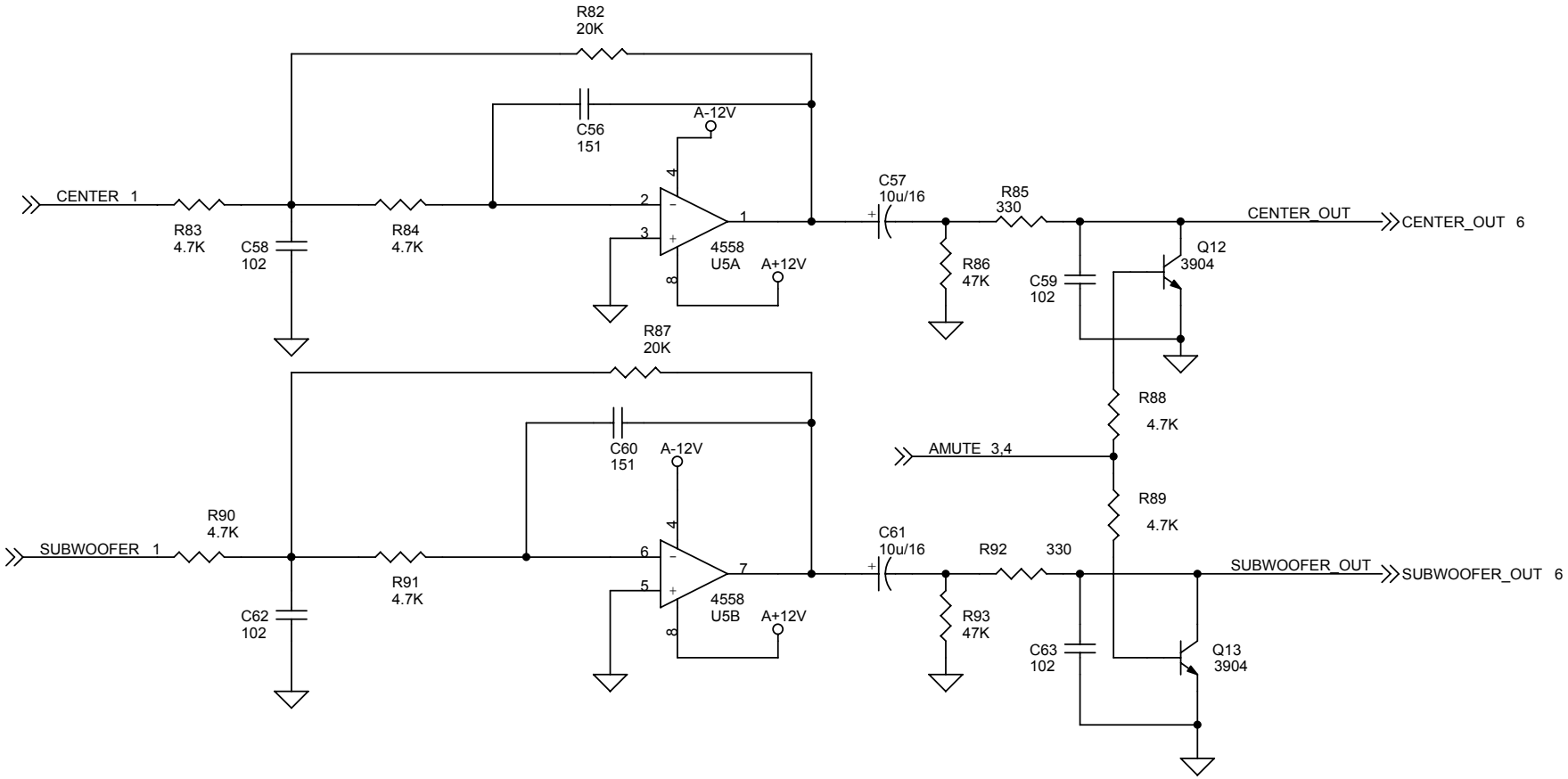

Title <Title>		
Size A4	Document Number <Doc>	Rev 1.0
Date: Tuesday, August 16, 2005	Sheet 5 of 10	

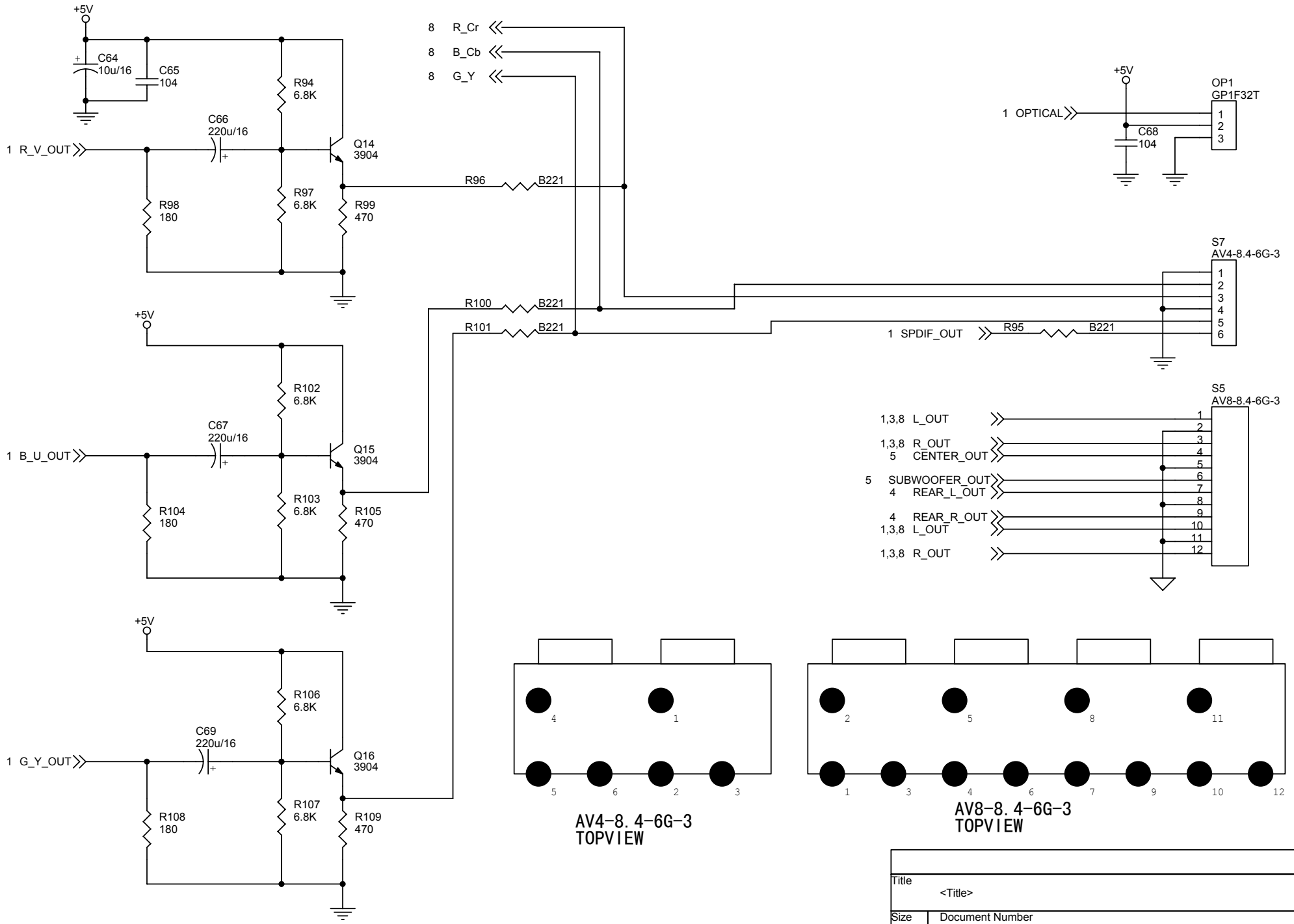
+5V
C64
10u/16
C65
104
R94
6.8K
C66
220u/16
1 R_V_OUT
Q14
3904
R98
180
R97
6.8K
R99
470
R96
B221
8 R_Cr
8 B_Cb
8 G_Y
+5V
1 OPTICAL
C68
104
OP1
GP1F32T
S7
AV4-8.4-6G-3
R100
B221
R101
B221
1 SPDIF_OUT
R95
B221
+5V
R102
6.8K
C67
220u/16
1 B_U_OUT
Q15
3904
R104
180
R103
6.8K
R105
470
S5
AV8-8.4-6G-3
1,3,8 L_OUT
1,3,8 R_OUT
5 CENTER_OUT
5 SUBWOOFER_OUT
4 REAR_L_OUT
4 REAR_R_OUT
1,3,8 L_OUT
1,3,8 R_OUT
+5V
R106
6.8K
C69
220u/16
1 G_Y_OUT
Q16
3904
R108
180
R107
6.8K
R109
470
AV4-8.4-6G-3
TOPVIEW
AV8-8.4-6G-3
TOPVIEW
Title
<Title>
Size
A4
Document Number
Rev
1.0
Date:
Tuesday, August 16, 2005
Sheet
6
of
10

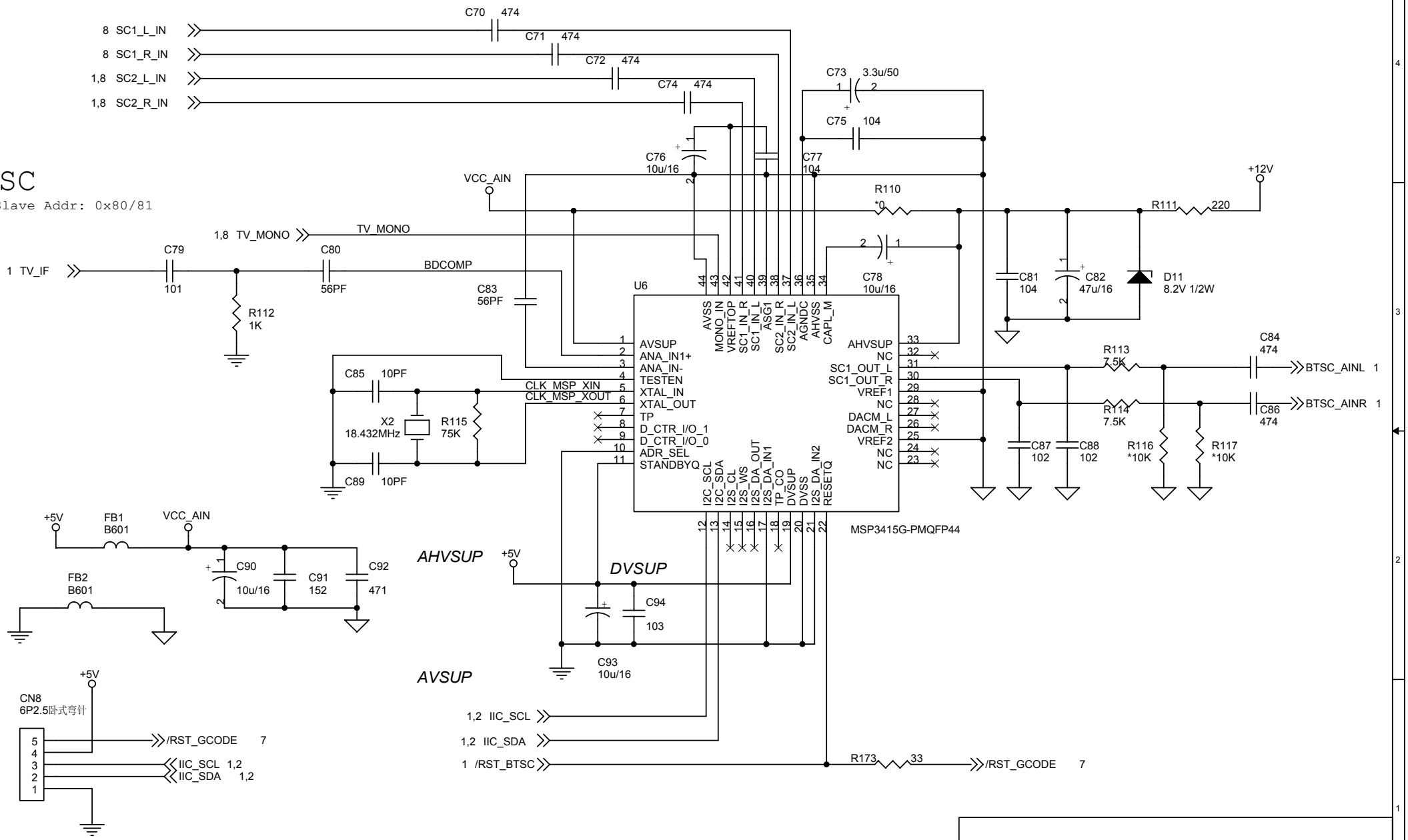
BTSC
IDC Slave Addr: 0x80/81
8 SC1_L_IN
8 SC1_R_IN
1,8 SC2_L_IN
1,8 SC2_R_IN
C70 474
C71 474
C72 474
C74 474
C73 3.3u/50
C75 104
C76 10u/16
C77 104
VCC_AIN
+12V
R110 *0
R111 220
1,8 TV_MONO
TV_MONO
1 TV_IF
C79 101
C80 56PF
BDCOMP
C83 56PF
R112 1K
C78 10u/16
C81 104
C82 47u/16
D11 8.2V 1/2W
U6
AVSS
MONO_IN
VREFTOP
SC1_IN_R
SC1_IN_L
ASG1
SC2_IN_R
SC2_IN_L
AGNDC
AHVSS
CAPL_M
AVSUP
ANA_IN1+
ANA_IN-
TESTEN
XTAL_IN
XTAL_OUT
TP
D_CTR_I/O_1
D_CTR_I/O_0
ADR_SEL
STANDBYQ
AHVSUP
NC
SC1_OUT_L
SC1_OUT_R
VREF1
NC
DACM_L
DACM_R
VREF2
NC
NC
C85 10PF
CLK_MSP_XIN
CLK_MSP_XOUT
X2 18.432MHz
R115 75K
C89 10PF
R113 7.5K
R114 7.5K
C84 474
C86 474
BTSC_AINL 1
BTSC_AINR 1
C87 102
C88 102
R116 *10K
R117 *10K
I2C_SCL
I2C_SDA
I2S_CL
I2S_WS
I2S_DA_OUT
I2S_DA_IN1
TP_CO
DVSUP
DVSS
I2S_DA_IN2
RESETQ
MSP3415G-PMQFP44
+5V
FB1 B601
VCC_AIN
FB2 B601
C90 10u/16
C91 152
C92 471
AHVSUP
+5V
DVSUP
C94 103
C93 10u/16
AVSUP
CN8
6P2.5卧式弯针
/RST_GCODE 7
IIC_SCL 1,2
IIC_SDA 1,2
1,2 IIC_SCL
1,2 IIC_SDA
1 /RST_BTSC
R173 33
/RST_GCODE 7
Title
<Title>
Size
Custom
Document Number
<Doc>
Rev
Date: Tuesday, August 16, 2005
Sheet 7 of 10

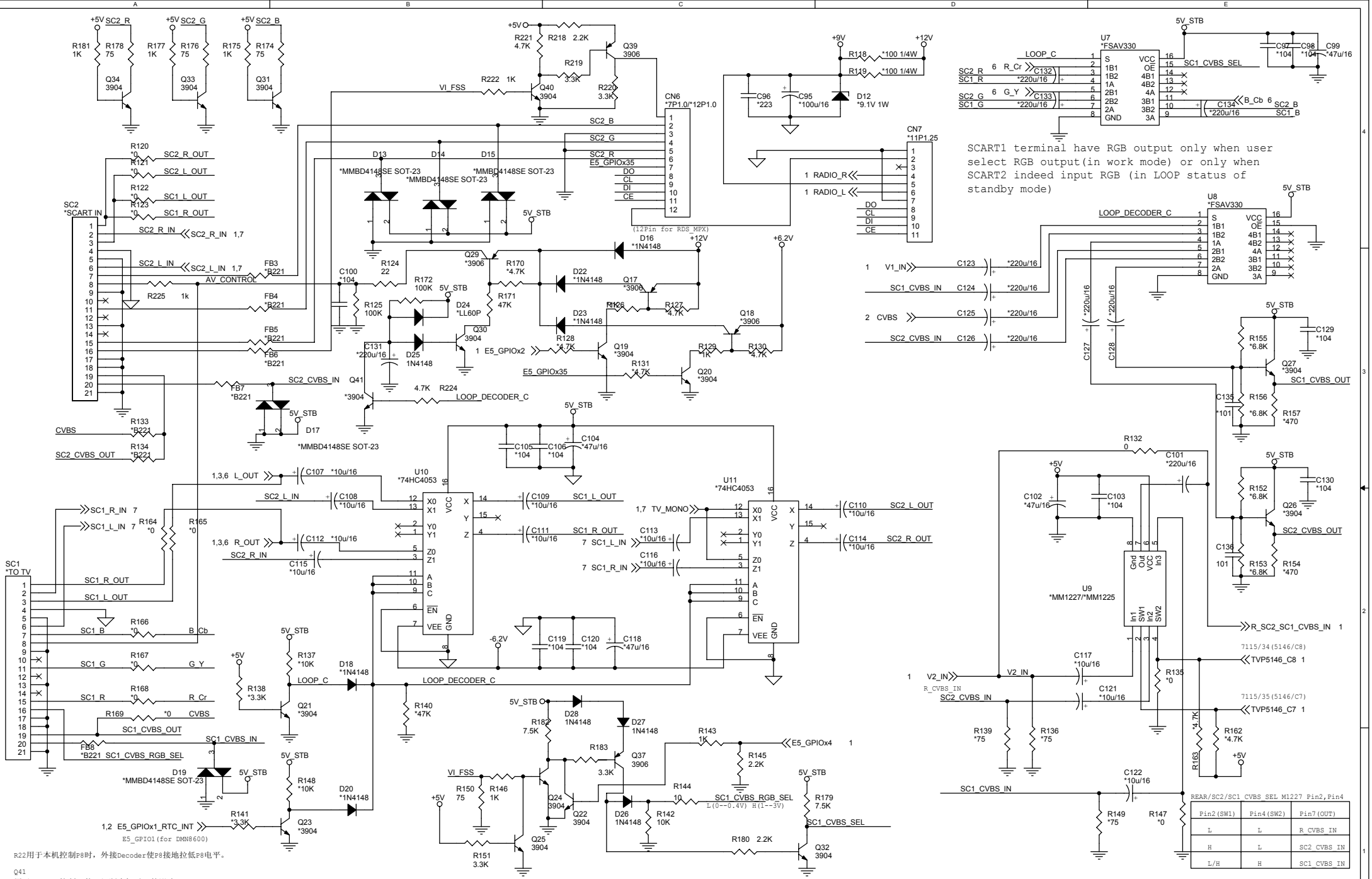

Function select(AV CONTROL) Pin8	
High(9.5-12V)	AV mode
Mid(5-8V)	Wide-screen
Low(0-2V)	TV mode

Fast Blanking Pin16	
High(1-3V)	RGB
Low(0-0.4V)	Composite

SCART LOOP AND DECODER Function

STATE \ NET	LOOP_DECODER_OFF_C	E5_GPIOx1_RTC_INT	SC1_AUDIO_OUT	SC2_AUDIO_OUT	SC1_CVBS_OUT	SC1_RGB	SC2_CVBS_OUT
STANDBY/DECODER_OFF	H	POWER_OFF	SC2_AUDIO_IN	SC1_AUDIO_IN	SC2_CVBS_IN	SC2_RGB	SC1_CVBS_IN
POWER_ON/DECODER_ON	L	H	RW_AUDIO_OUT	TV_MONO	RW_CVBS_OUT	RW_RGB_OUT	TUNER_CVBS_IN
POWER_ON/DECODER_OFF	H	L	SC2_AUDIO_IN	SC1_AUDIO_IN	SC2_CVBS_IN	RW_RGB_OUT	SC1_CVBS_IN

REAR/SC2/SC1_CVBS_SEL M1227 Pin2,Pin4		
Pin2(SW1)	Pin4(SW2)	Pin7(OUT)
L	L	R_CVBS_IN
H	L	SC2_CVBS_IN
L/H	H	SC1_CVBS_IN

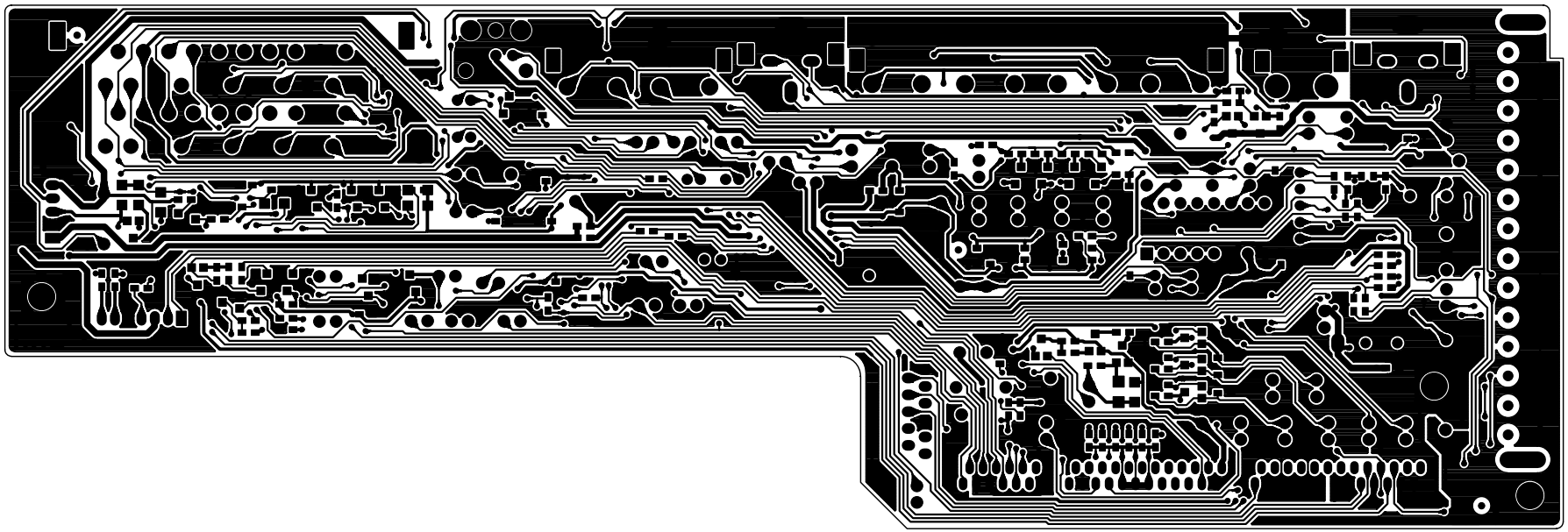

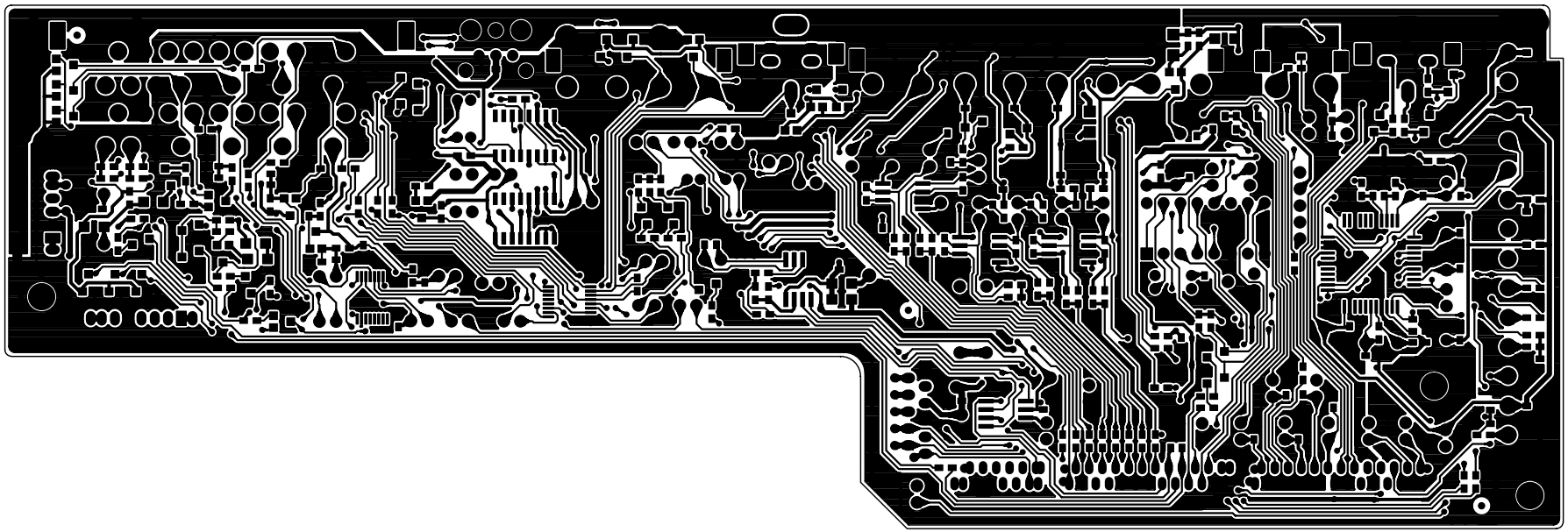

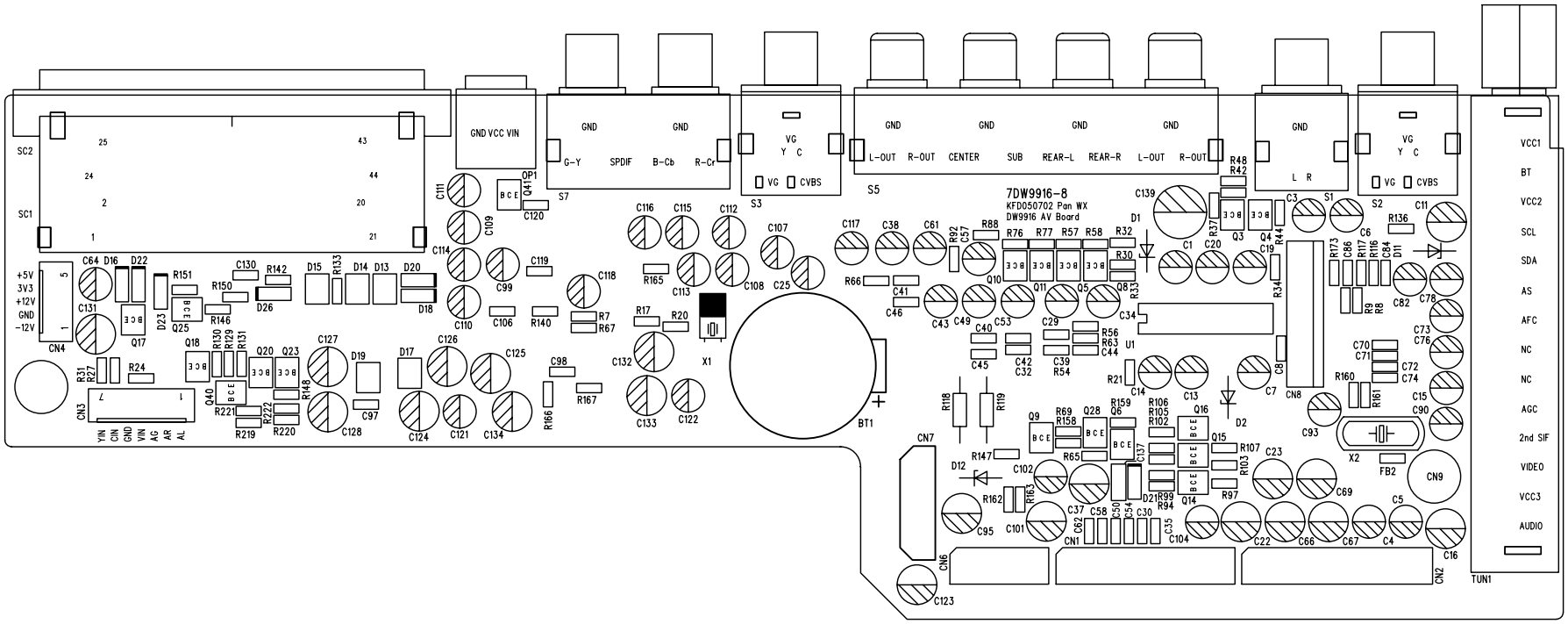
7DW9916-8
KFD050702 Pan WX
DW9916 AV Board
GND VCC VIN
G-Y SPDIF B-Cb R-Cr
L-OUT R-OUT CENTER SUB REAR-L REAR-R L-OUT R-OUT
L R
VG CVBS
VCC1
BT
VCC2
SCL
SDA
AS
AFC
NC
NC
AGC
2nd SIF
VIDEO
VCC3
AUDIO
+5V
3V3
+12V
GND
-12V
YIN CIN GND VIN AR AL
TUN1
BT1
X1
X2

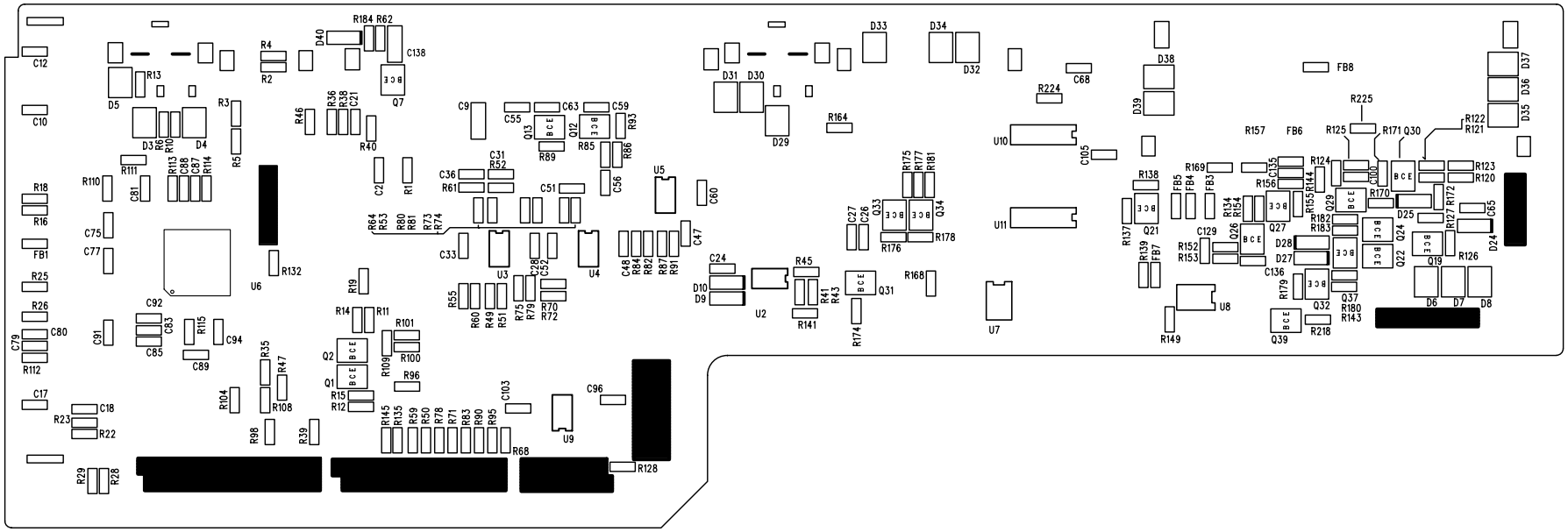

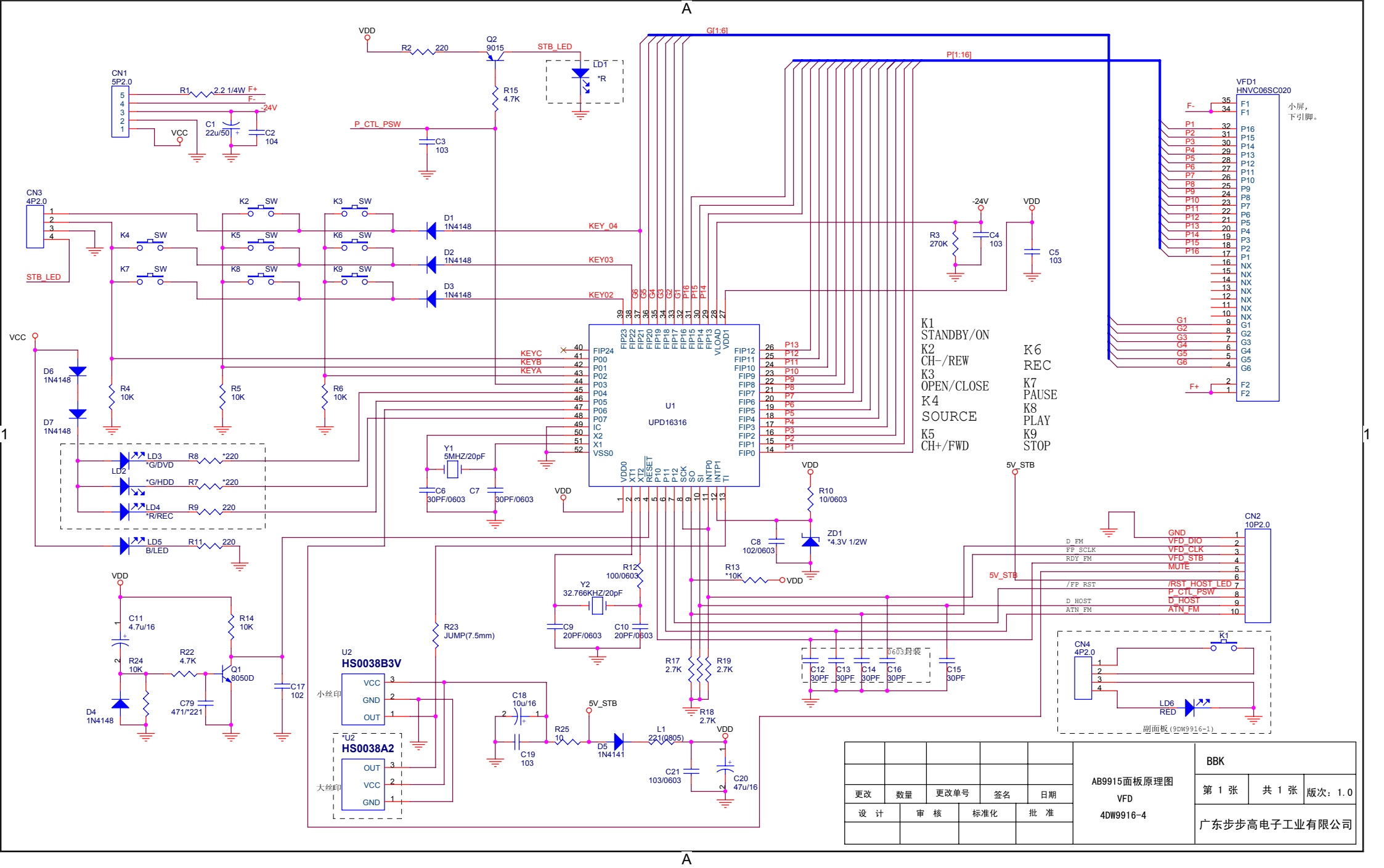
U1
UPD16316
U2
HS0038B3V
*U2
HS0038A2
VFD1
HNVC06SC020
CN1
5P2.0
CN2
10P2.0
CN3
4P2.0
CN4
4P2.0
K1
STANDBY/ON
K2
CH-/REW
K3
OPEN/CLOSE
K4
SOURCE
K5
CH+/FWD
K6
REC
K7
PAUSE
K8
PLAY
K9
STOP
AB9915面板原理图
VFD
4DW9916-4
BBK
广东步步高电子工业有限公司
第 1 张
共 1 张
版次：1.0
副面板(9DW9916-1)

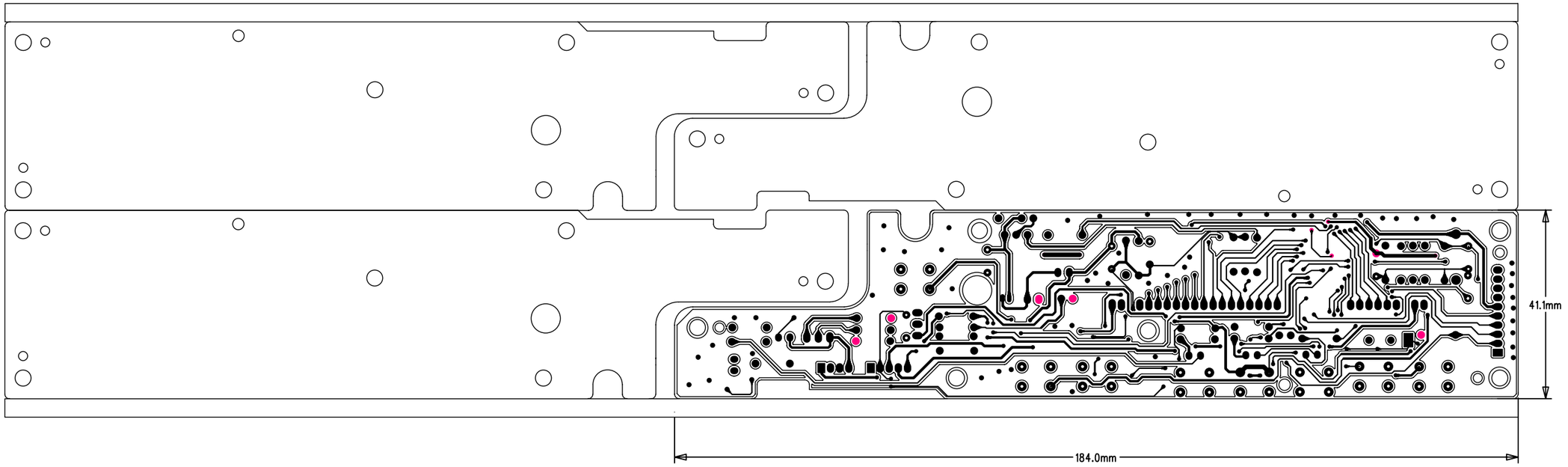
41.1mm
184.0mm

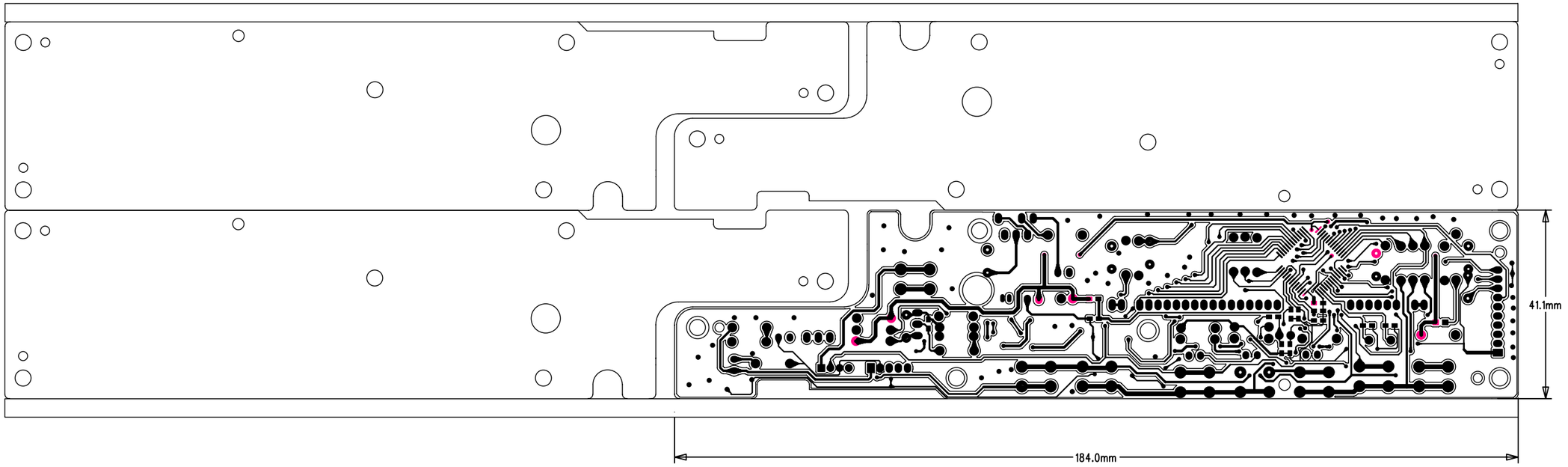
41.1mm
184.0mm

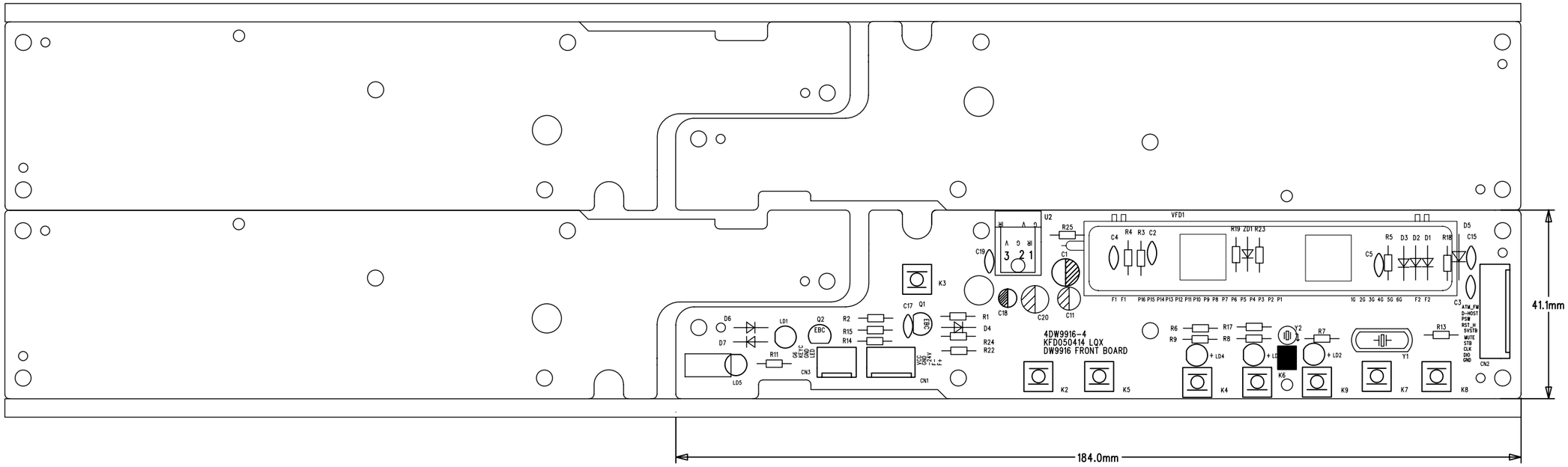
4DW9916-4
KFD050414 LQX
DW9916 FRONT BOARD
41.1mm
184.0mm

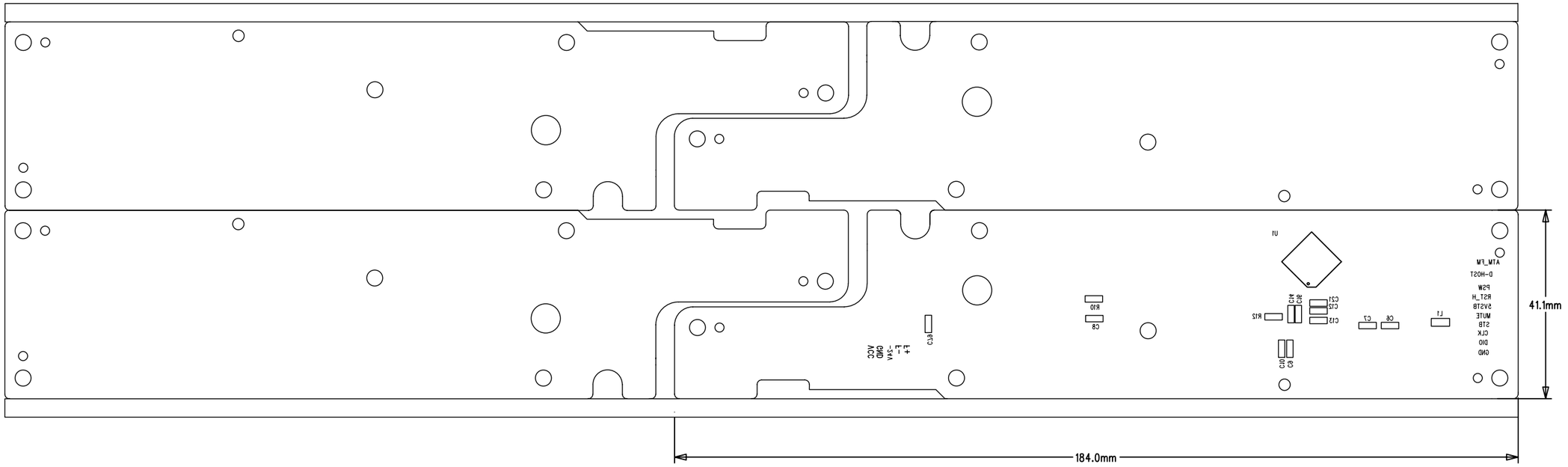
41.1mm
184.0mm

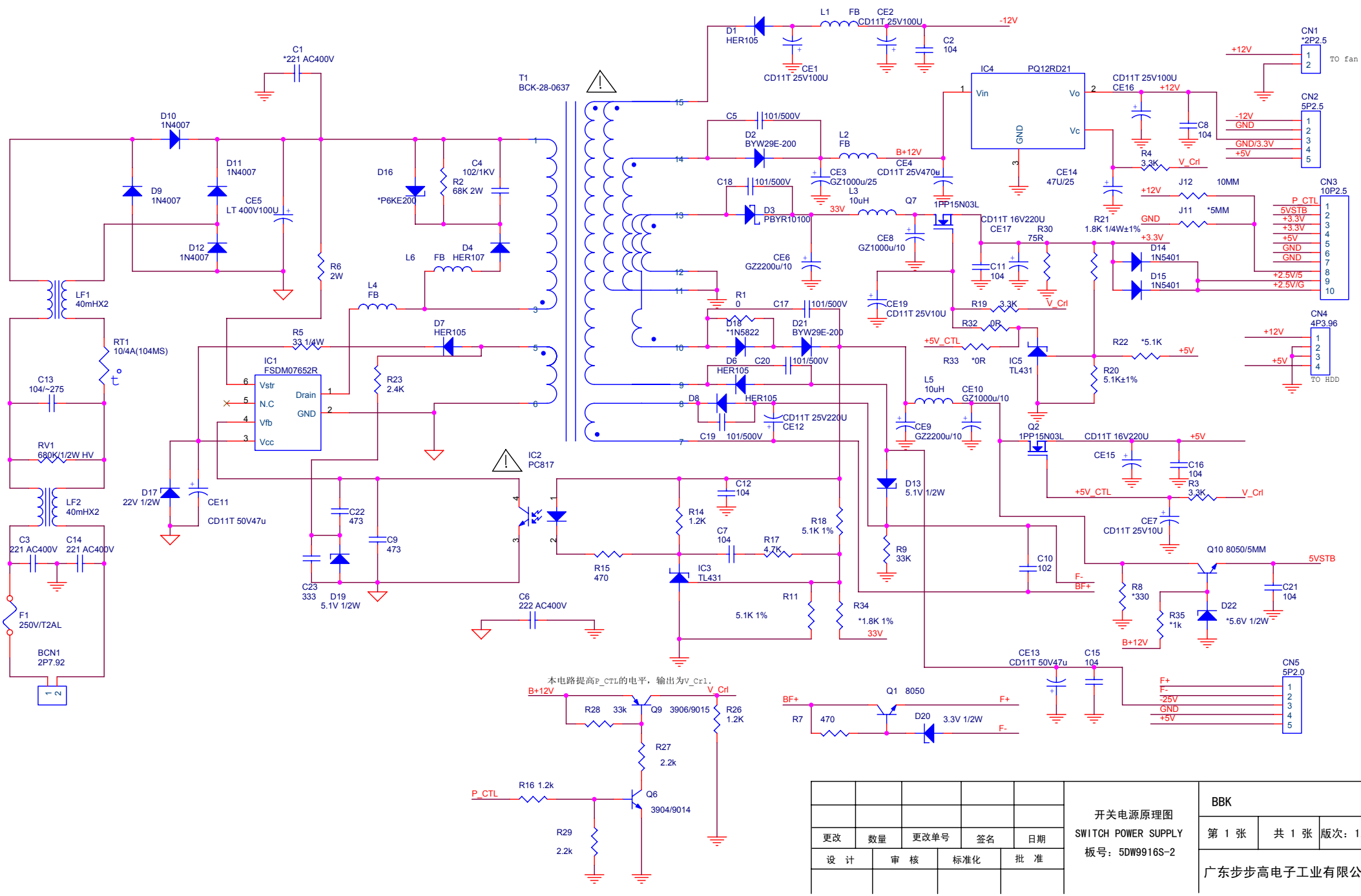
本电路提高P_CTL的电平，输出为V_Crl.
开关电源原理图
SWITCH POWER SUPPLY
板号：5DW9916S-2
BBK
第 1 张
共 1 张
版次：1.0
广东步步高电子工业有限公司
更改
数量
更改单号
签名
日期
设 计
审 核
标准化
批 准

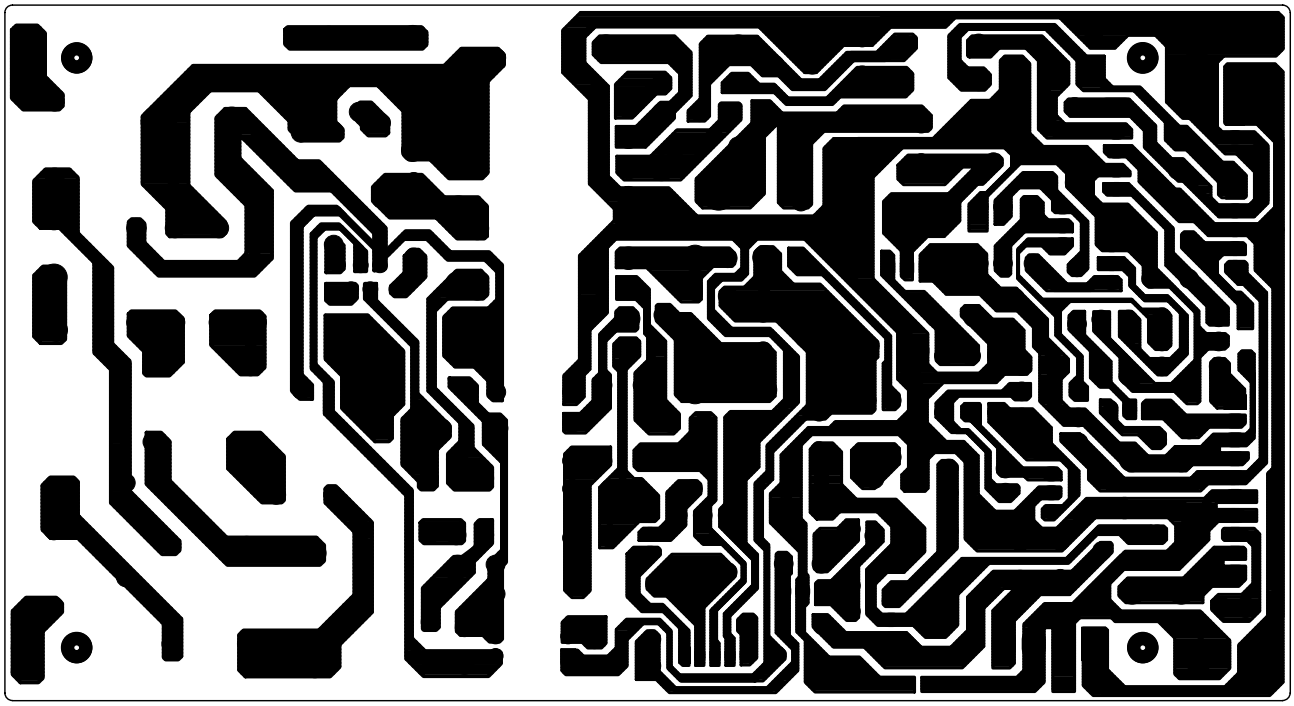

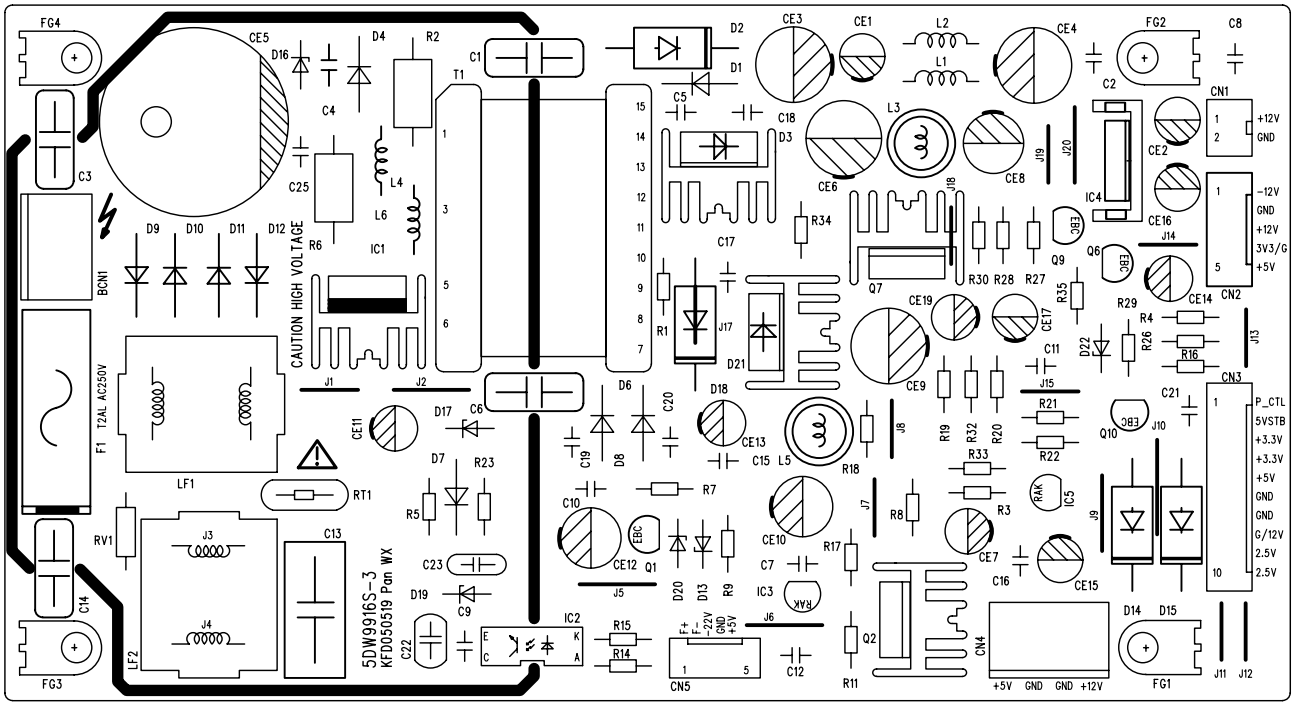
5DW9916S-3
KFD050519 Pan WX
CAUTION HIGH VOLTAGE
T2AL AC250V
+12V
GND
-12V
GND
+12V
3V3/G
+5V
P_CTL
5VSTB
+3.3V
+3.3V
+5V
GND
GND
G/12V
2.5V
2.5V
+5V GND GND +12V

PARTS LIST				MAIN BOARD		
ITEM		DESCRIPTION			QTY	LOCATION
1		0090001	CHIP RESISTOR	1/16W 0Ω ±5% 0603	19	L5,R55,R56,R73,R75,R76,R96,R97,R103,R104,R114,R125,R140,R171,R243,R99,R176,R184,R190
2		0090296	CHIP RESISTOR	1/16W 18Ω ±5% 0603	7	R180,R182,R186,R188,R192,R194,R196
3		0090004	CHIP RESISTOR	1/16W 22Ω ±5% 0603	16	R25,R26,R27,R28,R29,R31,R32,R34,R35,R36,R37,R38,R148,R164,R165,R232
4		0090005	CHIP RESISTOR	1/16W 33Ω ±5% 0603	14	R84,R110,R111,R112,R113,R139,R141, R142,R143,R199,R200,R248,R249, R250
5		0090220	CHIP RESISTOR	1/16W 51Ω ±5% 0603	21	R47,R48,R49,R50,R51,R52,R53,R54,R57,R59,R61,R62,R63,R64,R65,R66,R67,R69,R70,R71,R145
6		0390403	COMMON MODE INDUCTOR	YB009T-1394A	1	T1
7		0090291	CHIP RESISTOR	1/16W 56Ω ±5% 0603	10	R149,R150,R151,R152,R181,R183,R187,R189,R193,R195
8		0090273	CHIP RESISTOR	1/16W82Ω±5% 0603	6	R105,R106,R107,R126,R127,R128
9		0090181	CHIP RESISTOR	1/16W 100Ω ±5% 0603	2	R147,R202
10		0090221	CHIP RESISTOR	1/16W 120Ω ±5% 0603	1	R87
11		0090232	CHIP RESISTOR	1/16W 150Ω ±5% 0603	2	R230,R231
12		0090007	CHIP RESISTOR	1/16W 180Ω ±5% 0603	1	R245
13		0090009	CHIP RESISTOR	1/16W 330Ω ±5% 0603	1	R85
14		0090011	CHIP RESISTOR	1/16W 470Ω ±5% 0603	1	R241
15		0090013	CHIP RESISTOR	1/16W 680Ω ±5% 0603	5	R108,R137,R159,R161,R162
16		0090014	CHIP RESISTOR	1/16W 1K ±5% 0603	3	R157,R158,R252
17		0090491	EXACTITUDECHIP RES.	1/16W 1.2K±1% 0603	1	R45
18		0090017	CHIP RESISTOR	1/16W 2.2K ±5% 0603	8	R174,R175,R197,R211,R247,R251,R80, R81
19		0090019	CHIP RESISTOR	1/16W 4.7K ±5% 0603	6	R39,R82,R83,R101,R123,R153
20		0090020	CHIP RESISTOR	1/16W 5.1K ±5% 0603	1	R155
21		0090225	CHIP RESISTOR	1/16W 5.6K ±5% 0603	6	R205,R206,R207,R208,R209,R210
22		0090021	CHIP RESISTOR	1/16W 6.8K ±5% 0603	3	R144,R246,R242
23		0090023	CHIP RESISTOR	1/16W 10K ±5% 0603	46	R1,R2,R4,R5,R6,R7,R9,R10,R11,R12,R13,R15,R16,R17,R20,R41,R42,R43,R44,R46,R72,R77,R89,R95,R102,R109,R122,R124,R129,R130,R131,R132,R133,R134,R135,R136,R138,R156,R160,R163,R198,R203,R204,R228,R229,R233
24		0090024	CHIP RESISTOR	1/16W 15K ±5% 0603	4	R166,R167,R221,R222
25		0090033	CHIP RESISTOR	1/16W 91K ±5% 0603	1	R146
26		0090034	CHIP RESISTOR	1/16W 100K ±5% 0603	2	R74,R177
27		0100019	CHIP ARRAY RES.	1/16W33Ω ±5% 8P	12	RP31,RP32,RP33,RP34,RP35,RP36,RP37,RP38,RP39,RP40,RP41,RP42
28		0100028	CHIP ARRAY RES.	1/16W22Ω ±5% 8P	7	RP20,RP22,RP24,RP26,RP28,RP30,RP44
29		0100030	CHIP ARRAY RES.	1/16W51Ω±5% 8P	20	RP5,RP6,RP7,RP8,RP9,RP10,RP11,RP12,RP13,RP14,RP15,RP16,RP17,RP18,RP19,RP21,RP23,RP25,RP27,RP29
30		0260211	ELEC.CAP	CD11 50V3.3U±20%5×11 2	2	C249,C250
31		0260019	ELEC.CAP	CD11 16V10U±20%5×11 2	15	C4,CA5,C38,C128,C196,C213,C218,C237,C238,C239,C240,C241,C242,C275,C302
32		0260025	ELEC.CAP	CD11 16V47U±20%5×11 2	5	CA1,C139,C191,CA7,CA6
33		0260027	ELEC.CAP	CD11 16V100U±20%6×12 2.5	5	CA2,C181,C182,C225,C226
34		0260028	ELEC.CAP	CD11 16V220U±20%6×12 2.5	6	CA3,CA4,C146,C187,C189,C199
35		0260214	ELEC.CAP	CD11 16V330U±20%8×12 3.5	5	C185,C197,C303,C305,C306
36		0310043	CHIP CAP	50V 22P ±5% NPO 0603	2	C159,C160
37		0310190	CHIP CAP	50V 27P ±5% NPO 0603	4	C1,C2,C161,C162
38		0310044	CHIP CAP	50V 33P ±5% NPO 0603	2	C203,C201
39		0310045	CHIP CAP	50V 47P ±5% NPO 0603	5	C297,C298,C299,C300,C301
40		0310192	CHIP CAP	50V 56P ±5% NPO 0603	1	C164
41		0310047	CHIP CAP	50V 101 ±5% NPO 0603	6	C281,C283,C287,C289,C292,C296
42		0310049	CHIP CAP	50V 221 ±5% NPO 0603	1	C168

PARTS LIST				MAIN BOARD		
ITEM		DESCRIPTION			QTY	LOCATION
43		0310066	CHIP CAP	50V 102 ±10% X7R 0603	39	C14,C15,C16,C33,C34,C35,C46,C47,C48,C56,C81,C82,C83,C86,C93,C94,C95,C98,C108,C109,C110,C117,C118,C119,C120,C125,C126,C127,C134,C135,C136,C137,C142,C156,C169,C173,C179,C269,C270
44		0310072	CHIP CAP	50V 103 ±10% X7R 0603	20	C7,C10,C36,C37,C49,C51,C53,C54,C59,C62,C65,C66,C71,C72,C77,C78,C89,C90,C171,C194
45		0310207	CHIP CAP	50V 104 ±20% X7R 0603	143	C3,C5,C6,C8,C9,C12,C13,C17,C18,C19,C20,C21,C22,C27,C28,C29,C30,C31,C32,C40,C41,C42,C43,C44,C45,C50,C52,C55,C57,C58,C60,C61,C63,C64,C67,C68,C69,C70,C73,C74,C75,C76,C79,C80,C84,C85,C87,C88,C91,C92,C96,C97,C101,C102,C103,C104,C105,C106,C107,C112,C113,C114,C115,C116,C122,C123,C124,C129,C130,C131,C132,C133,C140,C143,C144,C152,C154,C155,C157,C158,C163,C165,C170,C172,C174,C175,C176,C177,C178,C180,C183,C184,C186,C188,C190,C192,C193,C195,C198,C200,C202,C204,C205,C206,C207,C208,C209,C210,C211,C212,C214,C215,C216,C217,C219,C220,C221,C222,C223,C224,C227,C228,C229,C230,C231,C232,C233,C234,C235,C236,C251,C252,C255,C256,C257,C273,C274,C276,C277,C304,C307,C308,C321
46		0310231	CHIP CAP	50V 122 ±10% X7R 0603	6	C243,C244,C245,C246,C247,C248
47		0310505	CHIP CAP	25V 224 +80%-20% Y5V 0603	1	C167
	47.1	0310112	CHIP CAP	16V 224 ±10% X5R 0603	1	C167
48		0310234	CHIP CAP	16V 105 +80%-20% Y5V 0603	6	C147,C166,C253,C254,C271,C272
	48.1	0310216	CHIP CAP	10V 105 +80%-20% Y5V 0603	6	R147,C166,C253,C254,C271,C272
49		0310476	CHIP CAP	10V 106 +80%-20% Y5V 1206	12	C11,C23,C24,C25,C26,C39,C99,C100,C111,C121,C138,C153
50		0390052	FERRITE BEAD	FB	3	L20,L21,FB60
51		0390096	CHIP INDUCTOR	1.8UH ±10% 1608	6	L14,L15,L16,L17,L18,L19
52		0390142	CHIP BEAD	FCM1608-601T02	2	FB61,FB62
53		0390095	CHIP BEAD	FCM1608K-221T05	70	L1,FB1,L2,FB2,L3,FB3,L4,FB4,FB5,L6,FB6,L7,FB7,FB8,L9,FB9,L10,FB10,L11,FB11,L12,FB12,L13,FB13,FB14,FB15,FB16,FB17,FB18,FB19,FB20,FB21,FB22,FB23,FB24,FB25,FB26,FB27,FB28,FB29,FB30,FB31,FB32,FB33,FB34,FB35,FB36,FB37,FB38,FB39,FB40,FB41,FB42,FB43,FB44,FB45,FB46,FB47,FB48,FB49,FB50,FB51,FB52,FB53,FB54,FB55,FB56,FB57,FB58,FB59
54		0700007	CHIP DIODE	1N4148	6	D2,D3,D5,D6,D7,D8
55		0780041	CHIP TRANSISTOR	3906(100-300) SOT-23	1	Q1
	55.1	0780063	CHIP TRANSISTOR	9015C	1	Q1
56		0780040	CHIP TRANSISTOR	3904(100-300) SOT-23	1	Q3
	56.1	0780062	CHIP TRANSISTOR	9014C	1	Q3
57		0790044	CHIP MOSFET	2N7002E SOT-23	2	Q6,Q7
58		0881057	IC	CS4360 SSOP	1	U16
59		0881059	IC	CS5333 SSOP	1	U18
60		0881127	IC	RT9164-33CG SOT-223	1	U13
61		0882214	IC	DMN-8652 B0 BGA	1	U1
62		0881814	IC	LP2995 SOP	1	U2
63		0882300	IC	HY5DU561622CT-5 TSOP	2	U4,U3
64		0881816	IC	SN74HCT14PWR TSSOP	1	U5
65		0881818	IC	SN74ALVCH16373 TSSOP	1	U8
66		0881819	IC	TSB41AB1PHP QFP	1	U11
67		0881820	IC	PQ018EZ02ZP	1	U12

PARTS LIST				MAIN BOARD		
ITEM		DESCRIPTION			QTY	LOCATION
68		0881821	IC	PQ025EZ01ZP	1	U14
69		0881936	IC	TVP5146 PQFP	1	U15
	69.1	0882672	IC	L2146 PQFP	1	U15
70		0960169	CRYSTAL	24.576MHz 49-S	1	Y2
71		0960171	CRYSTAL	13.50MHZ 49-S	1	Y1
72		0960229	CRYSTAL	14.31818MHZ 49-S	1	Y3
73		1632372	PCB	2DW9927-2	1	
74		1940005	Connecter	6P 2.0mm	1	J6
75		1940023	Connecter	7P 2.0mm	1	J7
76		1940030	Connecter	10P 2.5mm	1	CN7
77		1940046	Connecter	10P 2.0mm	1	CN5
78		1940224	Cable Connecter	7P 1.0mm	1	CN2
79		1940062	Cable Connecter	40P 2.5mm	2	J4,J5
80		1940120	Cable Connecter	26P1.0mm	1	CN6
81		1940161	Cable Connecter	24P1.0mm	1	CN4
82		3580134	RADIATOR	38×38×10 DW9917	1	

PARTS LIST						MAIN KEY BOARD
ITEM		DESCRIPTION			QTY	LOCATION
1		0000268	RESISTOR	1/4W2.2Ω±5%	1	R1
2		0000488	RESISTOR	1/6W220Ω±5%	1	R2
3		0090001	CHIP RES.	1/16W 0Ω ±5%	1	R23
4		0090003	CHIP RES.	1/16W 10Ω ±5%	2	R10,R25
5		0090181	CHIP RES.	1/16W 100Ω ±5%	1	R12
6		0090019	CHIP RES.	1/16W 4.7K ±5%	2	R15,R22
7		0090023	CHIP RES.	1/16W 10K ±5%	5	R4,R5,R6,R14,R24
8		0090104	CHIP RES.	1/16W 2.7K ±5% 0603	3	R17,R18,R19
9		0090203	CHIP RES.	1/16W 270K ±5% 0603	1	R3
10		0310066	CHIP CAP.	50V 102 ±10% 0603	2	C8,C17
11		0310072	CHIP CAP.	50V 103 ±10% 0603	5	C3,C4,C5,C19,C21
12		0310207	CHIP CAP.	50V104 ±20% 0603	1	C2
13		0310085	CHIP CAP.	50V 20P ±5% NPO 0603	2	C9,C10
14		0310191	CHIP CAP.	50V 30P ±5% NPO 0603	2	C6,C7
15		0260076	ELEC.CAP	CD11C 50V22U±20%6×7 2.5	1	C1
16		0260241	ELEC.CAP	CD11C 16V4.7U±20%4×7 1.5	1	C11
17		0260196	ELEC.CAP	CD11C 16V10U±20%4×7 1.5	1	C18
18		0260200	ELEC.CAP	CD11C 16V47U±20%5×7 2	1	C20
19		0700007	CHIP DIODE	1N4148	5	D1~D5
20		0780063	CHIP TRANSISTOR	9015C	1	Q2
21		0780085	CHIP TRANSISTOR	8050D	1	Q1
22		0881013	IC	D16316 QFP	1	U1
23		0960017	CHIP TRANSISTOR	32.768KHz 3×9	1	Y2
24		0960114	CRYSTAL	5.00MHZ 49-S	1	Y1
25		1200459	VFD	HNVC06SC020	1	VFD1
26		1340001	switch	6×7×1	7	K3-K9
27		1340003	switch	6×6×1	1	K2
28		1631792	PCB	4DW9922-1	1	
29		2121277	CONNECTER	10P100 2.0	1	CN2
30		2121626	CONNECTER	5P450 2.0	1	CN1
31		2121144	CONNECTER	4P290 2.0 2	1	CN3
32		2110166	WIRE	20＃ 80mm	1	GND1
33		2360016	infrared remote	HS0038B3V	1	U2
34		5230417	sponge cushion	10×10×10	2	below VFD
35		5230576	sponge cushion	10×10×12	1	below IR

PARTS LIST						POWER BOARD
ITEM		DESCRIPTION			QTY	LOCATION
1		00000059	Resistor	1/6W33Ω±5%	1	R5
2		00000169	Resistor	1/6W470Ω±5%	1	R15
3		00004069	Resistor	1/6W180Ω±5%	1	R7
4		00000309	Resistor	1/6W3.3K±5%	3	R4,R19,R3
5		00101299	Resistor	1/6W4.7K±1%	1	R11
6		00103099	Resistor	1/6W5.1K±1%	2	R20,R18
7		00000349	Resistor	1/6W4.7K±5%	1	R17
8		00000509	Resistor	1/6W33K±5%	2	R9,R28
9		00000229	Resistor	1/6W1K±5%	3	R14,R26,R16
10		00000279	Resistor	1/6W2.2K±5%	2	R29,R27
11		00000089	Resistor	1/6W75Ω±5%	1	R30
12		00003509	Resistor	1/6W2.4K±5%	1	R23
13		0070008	Resistor	@1/2W680K±5% CQC	1	RV1
14		00100819	Resistor	1/6W1.8K±1%L	1	R21
15		0010157	Resistor	2W68K±5% L15×7	2	R2,R6
16		02001369	capacitor	50V 473±20% 5mm	1	C9
17		02003189	capacitor	50V 104 ±20% L5mm	8	C2,C7,C8,C12,C15,C16,C11,C21
18		02102059	capacitor	630V 102 ±5% L5MM	1	C4
19		0200232	capacitor	500V 101 ±10% 5mm	4	C18,C5,C20,C19
20		0200365	capacitor	@CT81 250VAC 102 ±10% 10 VDE	2	C6,C1
	20.1	0200367	capacitor	@CT7 250VAC 102 ±10% 10 VDE	2	C6,C1
21		02100919	capacitor	63V 473 ±5% 5mm	1	C22
22		02100249	capacitor	100V 333 ±10% 5mm	1	C23
23		0200228	capacitor	1000V 101 ±10% 7.5mm	1	C17
24		02607149	Elec. Cap.	CD11T 25V100U±20%6×12 C5	3	CE1,CE2,CE16
25		02606869	Elec. Cap.	CD11T 25V220U±20%8×12 C5	1	CE12
26		0210207	capacitor	@275V 104 ±20% 15mm VDE	1	C13
	26.1	0210206	capacitor	@275V104±10%15mm VDE	1	C13
27		02605589	Elec. Cap.	CD11T 25V470u±20%10×16 5	1	CE4
28		02607239	Elec. Cap.	CD288H 25V1000U±20% 10×20 5	1	CE3
29		02607169	Elec. Cap.	CD11T 50V2.2U±20%5×11 C5	3	CE7,CE19,CE14
30		02606849	Elec. Cap.	CD11T 50V47u±20%6×12 C5	2	CE11,CE13
31		02607139	Elec. Cap.	CD11T 16V220U±20%6×12 C5	2	CE15,CE17
32		0260725	Elec. Cap.	CD288H 10V2200u ±20% 10×25 5	2	CE6,CE9
33		02607269	Elec. Cap.	CD288H 10V1000U±20%8×16 C5	2	CE8,CE10
34		0260584	Elec. Cap.	LT 400V100U±20%22×30 10	1	CE5
35		03900529	Ferrite bead	FB	4	L1,L2,L4,L6
36		0410077	Common choke	10UH 3A 5mm	2	L3,L5
37		0460523	Transformer	@BCK-28-0653 VDE	1	T1
38		1940001	Connector	2P2.5mm	1	CN1
39		05700059	Diode	1N4007	4	D9,D10,D11,D12
40		0570007	Diode	1N5401	2	D14,D15
41		05700139	Diode	HER105	4	D1,D6,D7,D8
42		05700149	Diode	HER107	1	D4
43		0680047	Schottky diode	PBYR10100 TO-220	1	D3
44		05800069	Zener diode	5.1V ±5% 1/2W	1	D13
45		05800469	Zener diode	3.6V ±5% 1/2W	1	D20
46		05800489	Zener diode	22V ±5% 1/2W	1	D17
47		0570045	Schottky diode	BYW29E-200 TO-220	2	D21,D2
48		07800249	TRANSISTOR	2N3906	1	Q9

PARTS LIST						POWER BOARD
ITEM		DESCRIPTION			QTY	LOCATION
	48.1	07800339	TRANSISTOR	9015C	1	Q9
49		07800239	TRANSISTOR	2N3904(100-300) TO-92	1	Q6
	49.1	07800329	TRANSISTOR	9014C	1	Q6
50		07800299	TRANSISTOR	C8050	1	Q1
51		0790024	MOSFET	1PP14N03L TO-220	2	Q7,Q2
	51.1	0790025	MOSFET	AP40N03P TO-220	2	Q7,Q2
	51.2	0790028	MOSFET	1PP15N03L TO-220	2	Q7,Q2
52		08805539	IC	LM431ACZ TO-92	2	IC3,IC5
	52.1	08805819	IC	TL431C TO-226AA(LP)	2	IC3,IC5
	52.2	08808009	IC	431L TO-92	2	IC3,IC5
53		0881326	IC	PQ12RD21 TO-220	1	IC4
54		0882680	IC	FSDM07652R TO-220F-6L	1	IC1
55		1000045	INDUCTOR IRON	@UT-20 30mH+∞-0% VDE	1	LF2
56		1050012	THERM RESISTOR	@NTC SCK-104MS±20% CQC	1	RT1
57		1563847	PCB	@5DW9916S-3 UL	1	
58		1940004	Connector	5P 2.5mm	1	CN2
59		1940024	Connector	5P 2.0mm	1	CN5
60		1940030	Connector	10P 2.5mm	1	CN3
61		1940037	Connector	4P 3.96mm	1	CN4
62		1940045	Connector	2P 8.0mm 2#	1	BCN1
63		1080032	Photocoupler	@HS817 VDE	1	IC2
64		2060002	Sheet metal	AB105KB	2	FG1,FG2
65		2100010	Jump wire	Φ0.6 L5mm	1	Q10
66		2100003	Jump wire	Φ0.6 L7.5mm	10	J1,J7,J8,J19,J11,J13,J15,R32,R1,J17
67		2100004	Jump wire	Φ0.6 L10mm	7	J2,J5,J6,J9,J20,
68		2100006	Jump wire	Φ0.6 L2.5mm	1	J10
69		2300035	Fuse	@T2AL 250V VDE	1	F1
70		3020402	Fuse box	BLX-2	1	F1
71		3580091	Radiator	11×15×31	3	D3,Q7,D21
72		3580165	Radiator	25×15×6	1	IC4
73		3580143	Radiator	11×15×31	1	IC1
74		4000073	Bolt	BT 3×8	4	IC1,D3,Q7,D21
75		4000535	Bolt	BT 3×8H	1	IC4

PARTS LIST				AV BOARD		
ITEM		DESCRIPTION			QTY	LOCATION
1		0090001	Chip Res.	1/16W 0Ω ±5% 0603	6	R16,R159,R135,R147,C84,C86
2		0090003	Chip Res.	1/16W 10Ω ±5% 0603	3	R66,R67,R144
3		0090004	Chip Res.	1/16W 22Ω ±5% 0603	1	R124
4		0090006	Chip Res.	1/16W 75Ω ±5% 0603	6	R136,R139,R178,R176,R174,R150
5		0090007	Chip Res.	1/16W 180Ω ±5% 0603	5	R39,R47,R98,R104,R108
6		0090008	Chip Res.	1/16W 220Ω ±5% 0603	4	R1,R7,R65,R111
7		0090009	Chip Res.	1/16W 330Ω ±5% 0603	6	R52,R61,R73,R80,R85,R92
8		0090011	Chip Res.	1/16W 470Ω ±5% 0603	6	R40,R48,R99,R105,R109,R157
9		0090014	Chip Res.	1/16W 1K ±5% 0603	17	R57,R58,R76,R77,R88,R89,R112,R126,R129,R143,R146,R171,R181,R177,R175,R225,R222
10		0090017	Chip Res.	1/16W 2.2K ±5% 0603	4	R68,R145,R180,R218
11		0090018	Chip Res.	1/16W 3.3K ±5% 0603	8	R12,R15,R138,R151,R183,R62,R219,R220
12		0090019	Chip Res.	1/16W 4.7K ±5% 0603	18	R50,R51,R59,R60,R71,R72,R78,R79,R83,R84,R90,R91,R127,R128,R130,R131,R170,R221
13		0090020	Chip Res.	1/16W 5.1K ±5% 0603	1	R184
14		0090021	Chip Res.	1/16W 6.8K ±5% 0603	12	R36,R38,R44,R46,R94,R97,R102,R103,R106,R107,R155,R156
15		0090186	Chip Res.	1/16W 7.5K ±5% 0603	2	R179,R182
16		0090023	Chip Res.	1/16W 10K ±5% 0603	12	R4,R5,R11,R14,R19,R21,R116,R117,R137,R142,R158,R56
17		0090187	Chip Res.	1/16W 12K ±5% 0603	2	R114,R113
18		0090024	Chip Res.	1/16W 15K ±5% 0603	4	R2,R3,R17,R20
19		0090025	Chip Res.	1/16W 20K ±5% 0603	6	R49,R55,R70,R75,R82,R87
20		0090189	Chip Res.	1/16W 30K ±5% 0603	1	R69
21		0090028	Chip Res.	1/16W 33K ±5% 0603	2	R63,R54
22		0090029	Chip Res.	1/16W 47K ±5% 0603	7	R53,R64,R74,R81,R86,R93,R224
23		0090242	Chip Res.	1/16W 75K ±5% 0603	1	R115
24		0090034	Chip Res.	1/16W 100K ±5% 0603	2	R125,R172
25		0260028	Elec. Cap.	CD11 16V220U±20%6×12 2.5	14	C16,C22,C23,C66,C67,C69,C101,C125,C126,C128,C131,C132,C133,C134
26		0260019	Elec. Cap.	CD11 16V10U±20%5×11 2	20	C25,C29,C34,C49,C53,C57,C61,C64,C76,C78,C90,C93,C107,C108,C109,C111,C112,C115,C117,C121
27		0260025	Elec. Cap.	CD11 16V47U±20%5×11 2	9	C1,C7,C38,C43,C82,C99,C102,C104,C118
28		0260027	Elec. Cap.	CD11 16V100U±20%6×12 2.5	1	C37
29		0260127	Elec. Cap.	CD11 16V4.7U±20%5×11 2	6	C3,C4,C5,C6,C13,C14
30		0260235	Elec. Cap.	CD110 10V2200U±20%10×20 5	1	C11
31		0260211	Elec. Cap.	CD11 50V3.3U±20%5×11 2	1	C73
32		0260690	Elec. Cap.	CD288H 10V1000U±20%8×16 3.5	1	C139
33		0310185	Chip Cap.	50V 5P ±0.25P NPO 0603	2	C89,C85
34		0310085	Chip Cap.	50V 20P ±5% NPO 0603	1	C26
35		0310192	Chip Cap.	50V 56P ±5% NPO 0603	2	C83,C80
36		0310047	Chip Cap.	50V 101 ±5% NPO 0603	2	C79,C135
37		0310048	Chip Cap.	50V 151 ±5% NPO 0603	6	C28,C33,C48,C52,C56,C60
38		0310196	Chip Cap.	50V 471 ±10% X7R 0603	1	C92
39		0310066	Chip Cap.	50V 102 ±10% X7R 0603	14	C30,C31,C35,C36,C50,C51,C54,C55,C58,C59,C62,C63,C87,C88
40		0310067	Chip Cap.	50V 152 ±10% X7R 0603	1	C91
41		0310072	Chip Cap.	50V 103 ±10% X7R 0603	5	C10,C12,C17,C32,C94

PARTS LIST				AV BOARD		
ITEM		DESCRIPTION			QTY	LOCATION
42		0310207	Chip Cap.	50V 104 ±20% X7R 0603	26	C2,C8,C21,C24,C39,C40,C41,C42,C44,C45,C46,C47,C65,C68,C75,C77,C81,C97,C98,C100,C103,C105,C106,C119,C120,C129
43		0310379	Chip Cap.	25V 474 +80%-20% Y5V 0603	2	C72,C74
	43.1	0310542	Chip Cap.	16V 474 ±10% X5R 0603	2	C72,C74
44		0310219	Chip Cap.	16V 106 +80%-20% Y5V 1206	3	C9,C137,C138
45		0390095	Chip bead	FCM1608K-221T05	8	FB6,R35,R37,R42,R95,R96,R100,R101
46		0390142	Chip bead	FCM1608-601T02	12	FB1,FB2,R6,R10,R13,R24,FB3,FB4,FB5,FB7,R27,R31
47		0580007	Zener diode	6.2V ±5% 1/2W	2	D2,D1
48		0580008	Zener diode	8.2V ±5% 1/2W	1	D11
49		0700007	Chip diode	1N4148	10	D9,D18,D22,D23,D25,D26,D27,D28,D21,D40
50		0680057	Schottky diode	LL60P MINI-MELF	2	D24,D10
51		0700056	Chip diode	MMBD4148SE SOT-23	11	D3~D6,D13,D14,D15,D17,D29,D7,D8
52		0780040	Chip transister	3904(100-300) SOT-23	28	Q1,Q2,Q3,Q4,Q5,Q8,Q9,Q10,Q11,Q12,Q13,Q14,Q15,Q16,Q19,Q20,Q21,Q22,Q24,Q25,Q27,Q30,Q32,Q31,Q33,Q34,Q41,Q40
	52.1	0780062	Chip transister	9014C	28	Q1,Q2,Q3,Q4,Q5,Q8,Q9,Q10,Q11,Q12,Q13,Q14,Q15,Q16,Q19,Q20,Q21,Q22,Q24,Q25,Q27,Q30,Q32,Q31,Q33,Q34,Q41,Q40
53		0780041	Chip transister	3906(100-300) SOT-23	8	Q6,Q7,Q17,Q18,Q28,Q29,Q37,Q39
	53.1	0780063	Chip transister	9015C	8	Q6,Q7,Q17,Q18,Q28,Q29,Q37,Q39
54		0880443	IC	CD4052BCN DIP	1	U1
	54.1	0881429	IC	CD4052BE DIP	1	U1
55		0881080	IC	PCF8563T SO8	1	U2
56		0881226	IC	RC4558D SOP	3	U3,U4,U5
57		0881842	IC	MSP3415G QFP	1	U6
58		0882267	IC	FSAV330 TSSOP	2	U8,U7
59		0881817	IC	MM1225XF SOP	1	U9
60		0881992	IC	HC4053M SOIC	1	U10
61		0960017	Crystal	32.768KHz 3×9	1	X1
62		0960274	Crystal	18.432MHz ±10PPM 49-S 12P	1	X2
63		1020023	Tuner	JS-6B2F/L121-D5	1	TUN1
64		1090009	Optical output	GP1F32T	1	OP1
	64.1	1090024	Optical output	TX179AT	1	OP1
65		1632479	PCB	7DW9916-8	1	
66		1860056	SCART socket		1	SC1
67		1910159	socket	CS socket DASW-02	2	S3,S2
68		1910062	socket	AV2-8.4--6G	1	S1
69		1910079	socket	AV8-8.4-6G-3	1	S5
70		1910078	socket	AV4-8.4-6G-3	1	S7
71		1940024	socket	5P 2.0mm	1	CN4
72		1940023	socket	7P 2.0mm	1	CN3
73		1940224	socket	4/3P 1.0mm	1	CN6
74		1940120	socket	13P1.0mm	1	CN2
75		1940161	socket	12P1.0mm	1	CN1

PARTS LIST				POWER SWITCH BOARD		
ITEM		DESCRIPTION			QTY	LOCATION
1		1340003	TACT SWITCH	6×6×1	1	K1
2		0620154	LED	3R 4HD H=4.3	1	LD1
3		1940141	SOCKET	4P 2.0mm	1	CN4
4		1563331	PCB	9DW9922-1	1	

PARTS LIST				DV BOARD		
ITEM		DESCRIPTION			QTY	LOCATION
1		1860040	1394 SOCKET	IEEE1394 4P/F DIP	1	J2
2		1632157	PCB	CDW805-2	1	

PARTS LIST				FRONT AV BOARD		
ITEM		DESCRTIPTION			QTY	LOCATION
1		1563330	PCB	BDW9922-1	1	
2		1910112	SOCKET	AV3-SK-01	1	J1

BBK ELECTRONICS CORP., LTD.
23 Bubugao Road, Wusha, Chang'an, Dongguan, China
http: //www.gdbbk.com