SHARP SERVICE MANUAL

No. S7852WQ790W//

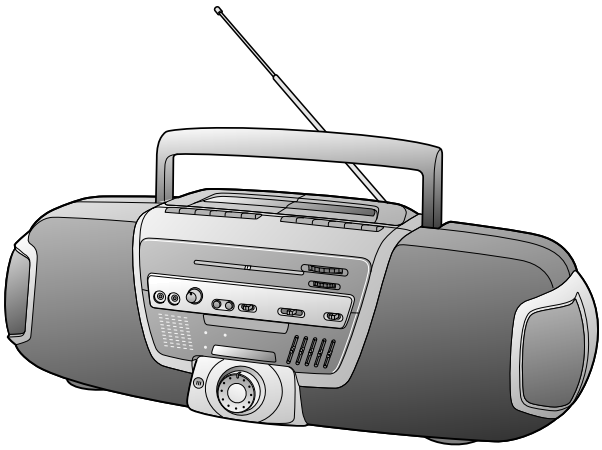

WQ-790W

• In the interests of user-safety the set should be restored to its original condition and only parts identical to those specified should be used.

CONTENTS

	Page
SPECIFICATIONS	1
VOLTAGE SELECTION	2
AC POWER SUPPLY CORD AND PLUG	2
FITTING OF DIAL POINTER	2
NAMES OF PARTS	3
DISASSEMBLY	4
ADJUSTMENT	5
NOTES ON SCHEMATIC DIAGRAM	6
VOLTAGE	7
TYPES OF TRANSISTOR AND LED	7
SCHEMATIC DIAGRAM / WIRING SIDE OF P.W.BOARD	8
PARTS GUIDE / EXPLODED VIEW	

SPECIFICATIONS

● General

Power source:	AC 110-127 V/220-240 V, 50/60 Hz DC 15 V ["D" size (UM/SUM-1, R20 or HP-2) battery × 10]
Power consumption:	20 W
Output power:	PMPO; 120 W (60 W + 60 W) (AC operation) MPO (Max.); 30 W (15 W + 15 W) (AC operation) RMS; 15 W (7.5 W + 7.5 W) (DC operation, 10 % T.H.D.)
Speakers:	12 cm (4-3/4") free-edge speaker × 2 5 cm (2") surround speaker × 2
Input terminal:	MIC 1/2; 1 mV/600 ohms CD/LINE; 350 mV/47 kohms
Output terminal:	Headphones; 16-50 ohms (recommended; 32 ohms)
Dimensions:	Width; 630 mm (24-13/16") Height; 205 mm (8-1/8") Depth; 215 mm (8-1/2")
Weight:	5.3 kg (11.7 lbs.) without batteries

● Radio section

Frequency range:	FM; 88 - 108 MHz SW1; 2.3 - 7.3 MHz SW2; 7.3 - 22 MHz MW; 526.5 - 1,606.5 kHz

● Tape recorder section

Frequency response:	60 - 12,000 Hz (Normal tape)
Signal/noise ratio:	40 dB (TAPE 1, recording/playback) 55 dB (TAPE 2, playback)
Wow and flutter:	0.15 % (WRMS)
Motor:	DC 15 V electric governor
Bias system:	AC bias
Erase system:	Magnet erase

Specifications for this model are subject to change without prior notice.

SHARP CORPORATION

This document has been published to be used for after sales service only.
The contents are subject to change without notice.

FOR A COMPLETE DESCRIPTION OF THE OPERATION OF THIS UNIT, PLEASE REFER TO THE OPERATION MANUAL.

VOLTAGE SELECTION

Before operating the unit on mains, check the preset voltage. If the voltage is different from your local voltage, adjust the voltage as follows: Slide the AC power supply socket to the visible indication of the side of your local voltage.

AC POWER SUPPLY CORD AND PLUG

9FF24801830210 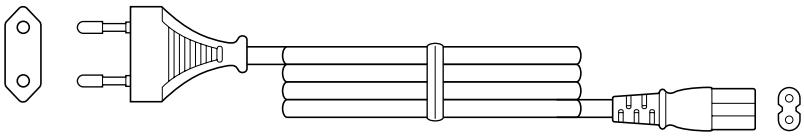	**9FF26802125120**
9FF24801600292 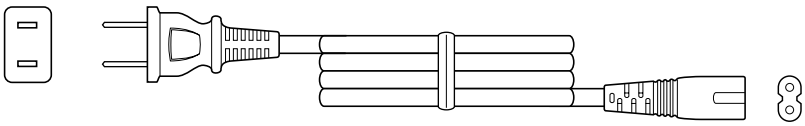	**9FF26802125210** 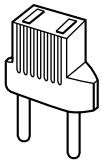

FITTING OF DIAL POINTER

1. Remove the main PWB. Attach the dial pointer as shown arrow Ⓐ on the front cabinet, putting it into the section indicated by arrow Ⓑ.
2. Install the main PWB in the front cabinet and secure it with the four screws.
3. Turn the tuning control knob in the direction indicated by Ⓒ. Set the dial pointer to point "0", and then make the rest of the adjustments.

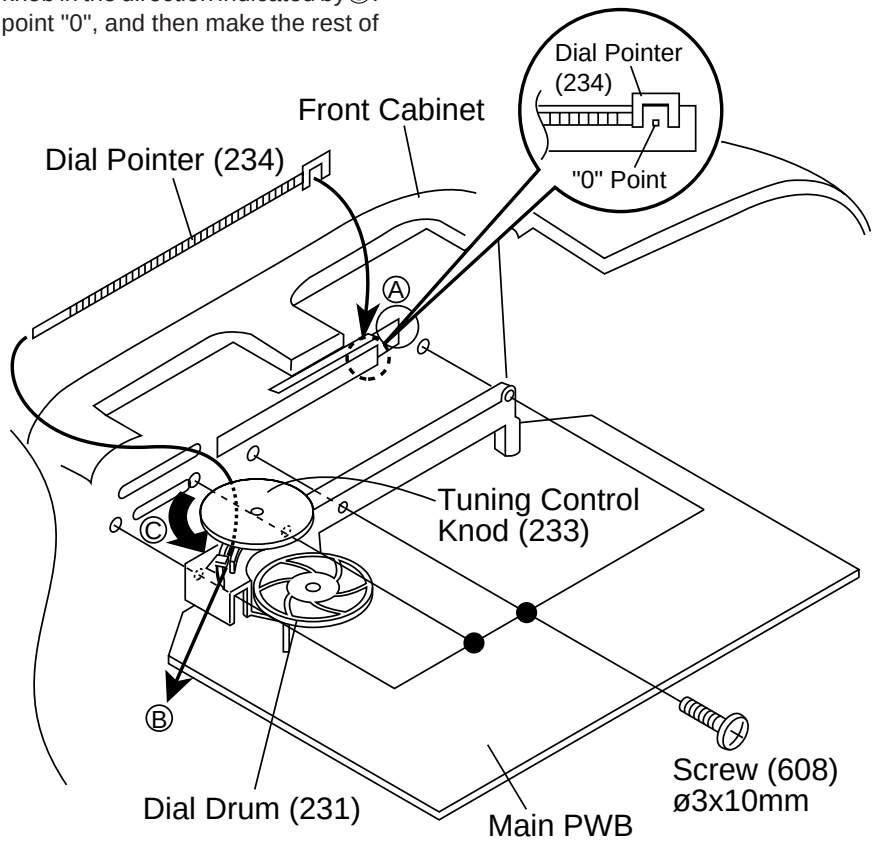

Figure 2

NAMES OF PARTS

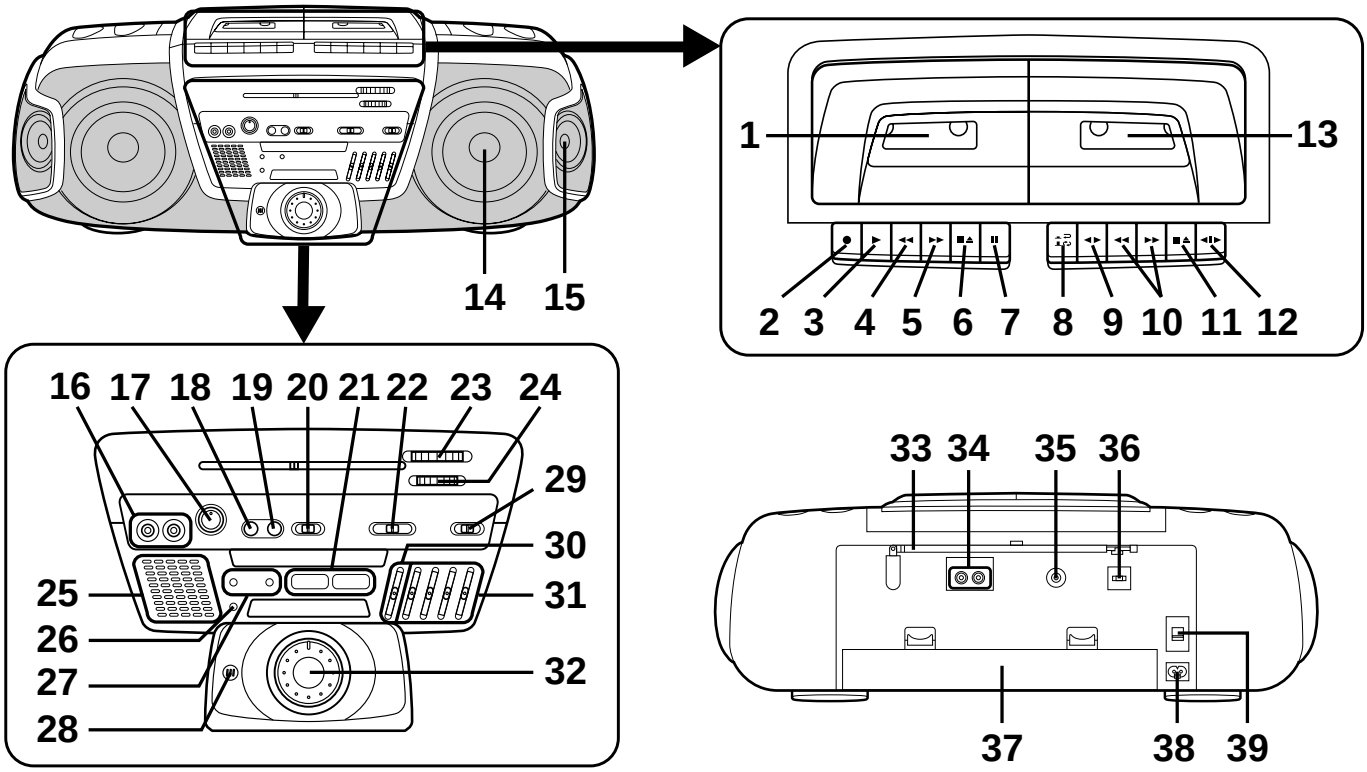

1. (TAPE 1) Cassette Compartment
2. (TAPE 1) Record Button: ●
3. (TAPE 1) Play Button: ►
4. (TAPE 1) Rewind Button: ◄◄
5. (TAPE 1) Fast Forward Button: ►►
6. (TAPE 1) Stop/Eject Button: ■ ▲
7. (TAPE 1) Pause Button: ❚❚
8. (TAPE 2) Reverse Mode Switch:
9. (TAPE 2) Play Button: ◄ ►
10. (TAPE 2) Fast Wind Buttons: ◄◄ / ►►
11. (TAPE 2) Stop/Eject Button: ■ ▲
12. (TAPE 2) Direction Switch: ◄❚►
13. (TAPE 2) Cassette Compartment
14. Full-Range Speaker
15. Surround Speaker
16. Mixing Microphone Sockets
17. Mixing Microphone Volume Control
18. Surround On/Off Switch
19. Surround Mode Select Switch
20. Function Selector Switch
21. Surround Mode Indicators
22. Band Selector Switch
23. Tuning Control
24. Fine Tuning Control
25. Spectrum Analyzer
26. FM Stereo Indicator
27. Power/(TAPE 2) Play Direction Indicators
28. Built-in Microphone
29. Dubbing Speed/Built-in Microphone/FM Mode Switch
30. Extra Bass Control: X-BASS
31. Graphic Equalizer Controls
32. Volume Control
33. FM/SW Telescopic Rod Aerial
34. CD/Line Input Sockets
35. Headphone Socket
36. Beat Cancel Switch
37. Battery Compartment
38. AC Power Input Socket
39. AC Voltage Selector

DISASSEMBLY

Caution on Disassembly
Follow the below-mentioned notes when disassembling the unit and reassembling it, to keep it safe and ensure excellent performance:

1. Take cassette tape out of the unit.
2. Be sure to remove the power supply plug from the wall outlet before starting to disassemble the unit and remove the batteries from the unit.
3. Take off nylon bands or wire holders where they need to be removed when disassembling the unit. After servicing the unit, be sure to rearrange the leads where they were before disassembling.
4. Take sufficient care on static electricity of integrated circuits and other circuits when servicing.

STEP	REMOVAL	PROCEDURE	FIGURE
1	Front Cabinet/ Rear Cabinet	1. Battery Compartment Lid. ..... (A1)x1 2. Screw ..... (A2)x1 3. Screw ..... (A3)x8 4. Socket ..... (A4)x1	4-1
2	Tape mechanism	1. Screw ..... (B1)x2 2. Socket ..... (B2)x4 3. Open the cassette holder. 4. Screw ..... (B3)x6	4-2
3	Main PWB	1. Knob ..... (C1)x1 2. Screw ..... (C2)x4 3. Socket ..... (C3)x5	4-2
4	Graphic Equalizer PWB	1. Screw ..... (D1)x5	4-3
5	Volume PWB	1. Knob ..... (E1)x1 2. Screw ..... (E2)x2 3. Screw ..... (E3)x1	4-3
6	Power PWB	1. Screw ..... (F1)x1 2. Bracket ..... (F2)x1	4-4

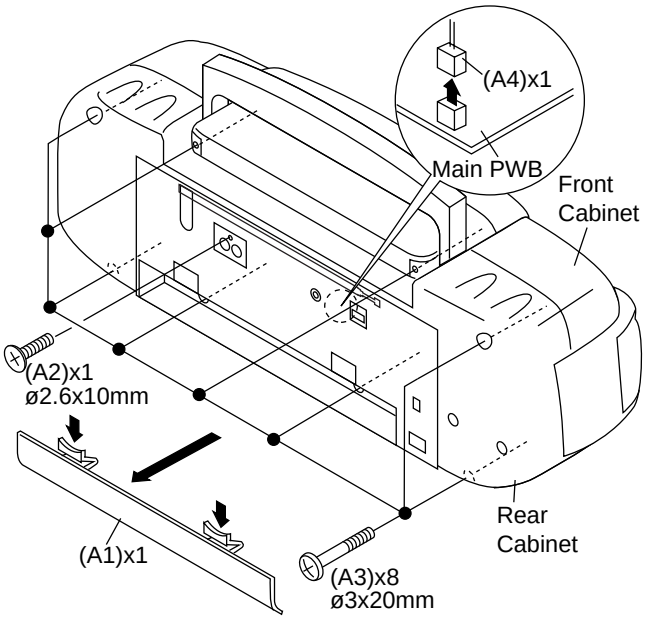

Figure 4-1

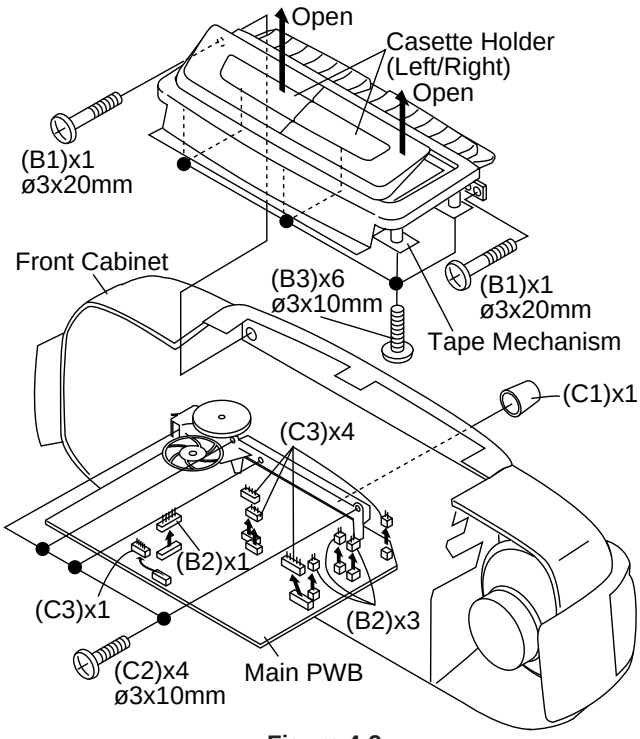

Figure 4-2

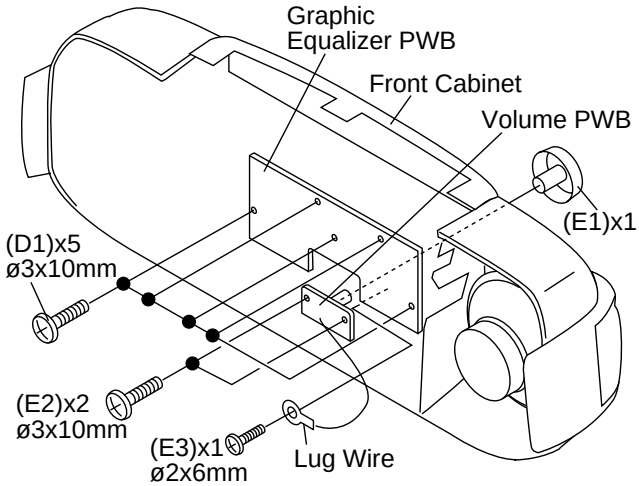

Figure 4-3

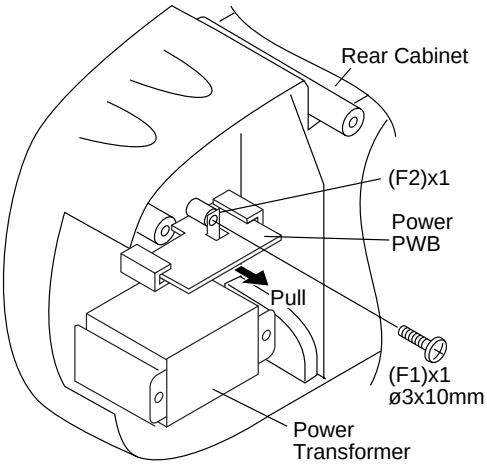

Figure 4-4

ADJUSTMENT

MECHANISM SECTION

• Driving Force Check

Torque Meter	Specified Value
Play: TW-2412	Tape 1: Over 60 g Tape 2: Over 50 g

• Torque Check

Torque Meter	Specified Value	
	Tape 1	Tape 2
Play: TW-2111	30 to 60 g.cm	30 to 60 g.cm
Fast forward: TW-2231	80 to 135 g.cm	55 to 120 g.cm
Rewind: TW-2231	80 to 135 g.cm	55 to 120 g.cm

• Head Azimuth

Test Tape	Instrument Connection
MTT-114	Headphones Socket (Load resistance: 32 ohms)

* Open the cassette holder, and load the test tape directly into the mechanism. (Do not load the tape into the cassette holder.)

• Tape Speed (Normal only)

Test Tape	Adjustment Point	Specified Value	Instrument Connection
MTT-111	Tape 1,2:VR501	3,000 ± 60 Hz	Headphones Socket (Loadresistance: 32 ohms)

DECK SECTION

• Bias Oscillation

• Beat Cancel Switch: A

Adjustment Point	Specified value	Instrument Connection
T301	100 kHz + 4 kHz	Pin 1 of CNS108

	Specified Value
Beat Cancel	A: 100 ± 4 kHz B: 94 ± 4 kHz C: 104 ± 4 kHz

TUNER SECTION

fL: Low-range frequency
fH: High-renge frequency

• FM IF/RF

Test Stage	Specified Value/ Adjusting Point	Instrument Connection
IF	T201	Input: FM Antenna Output:Pin 9 of IC202
Detection	T202	
Band Coverage	fL: L202 fH: TC202	Input: Antenna Output: Headphone Socket (Load resistance: 32 ohms)
Tracking	fL(88.0 MHz): L201 fH(108 MHz): TC201	

• AM IF/RF

Test Stage	Specified Value/ Adjusting Point	Instrument Connection
IF	T203	Input: Antenna Output: Pin 9 of IC202
MW Band Coverage	fL: L203 fH: TC203	Input: Antenna Output: Headphone Socket (Load resistance 32 ohms)
MW Tracking	fL(600 kHz): L206 fH(1,400 kHz):TC207	
SW1 Band Coverage	fL(2.3 MHz): L204 fH(7.3 MHz): TC204	
SW1 Tracking	fL(2.6 MHz): L207 fH(6 MHz): TC209	
SW2 Band Coverage	fL(7.3 MHz): L205 fH(22 MHz): TC205	
SW2 Tracking	fL(8.5 MHz): L208 fH(19 MHz): TC210	

• VCO Frequency

Adjustment Point	Specified value	Instrument Connection
VR201	76 kHz ± 200 Hz	Pin 13, Pin 21 and ground of IC202

Note:
After preparing the test circuit shown in Fig. 5, connect the Pin 13, Pin 21 and ground of the IC202 with the test circuit, and measure the value.

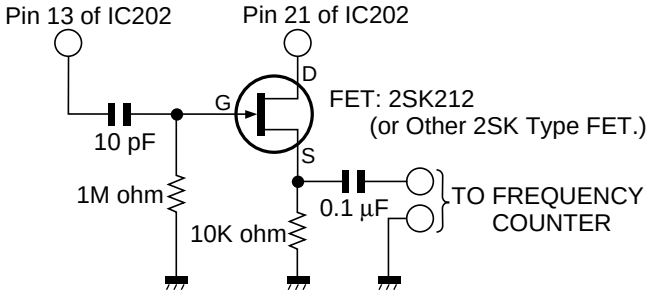

Figure 5 VCO FREQUENCY TEST CIRCUIT

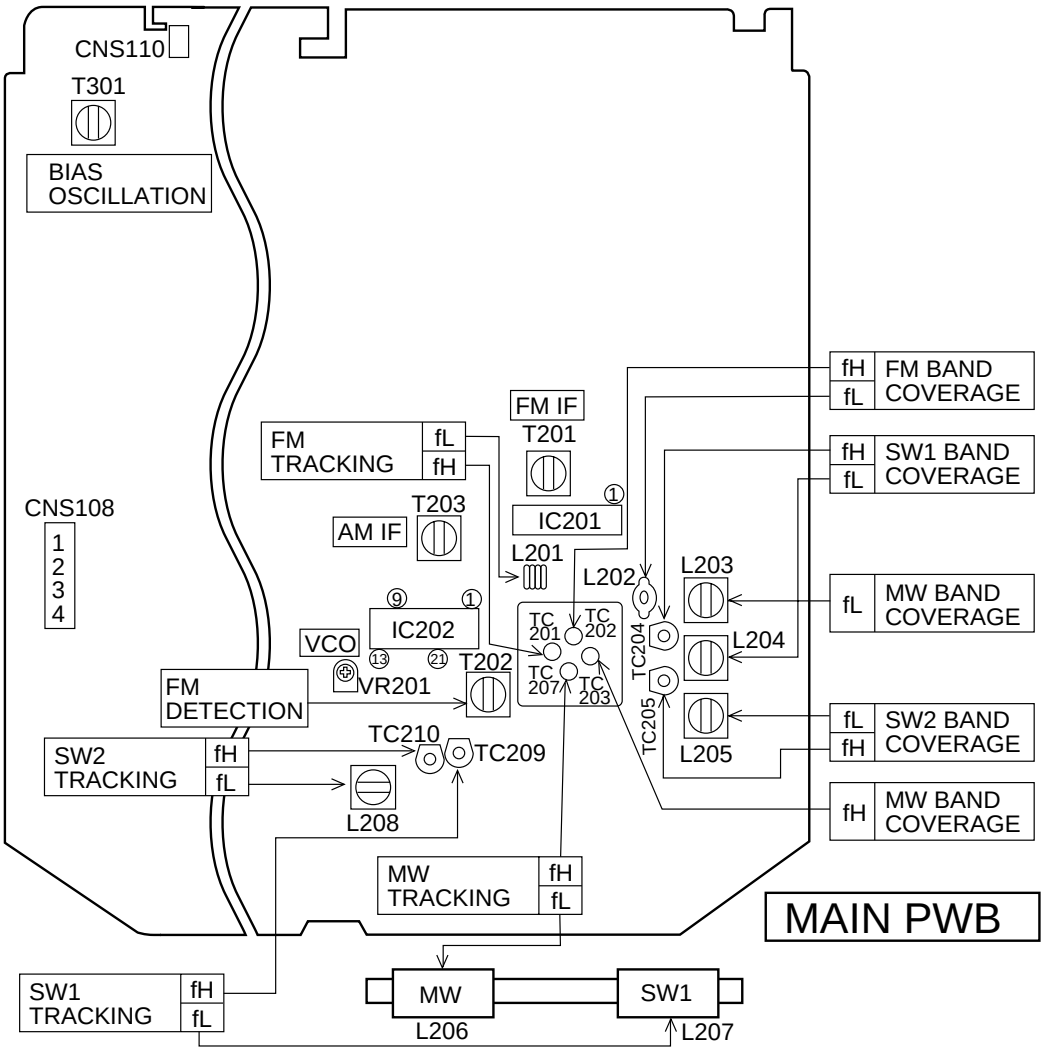

Figure 6 ADJUSTMENT POINTS

NOTES ON SCHEMATIC DIAGRAM

- Resistor:
  To differentiate the units of resistors, The symbol as K and M are used: the symbol K means 1000 ohm and the symbol M means 1000 kohm and the resistor without any symbol is an ohm resistor. The resistor designated “Fusible” is a fuse type resistor.
- Capacitor:
  To indicate the unit of capacitor, a symbol P is used: this symbol P means pico-farad and the unit of the capacitor without such a symbol is microfarad. As to electrolytic capacitor, the expression “capacitance/withstand voltage” is used.
  (CH),(RH),(UJ): Temperature compensation
  (ML): Mylar type
  (S): Styrol type
- The indicated voltage in each section is the one measured by Digital Multimeter between such a section and the chassis with no signal given.
- Schematic diagram and Wiring Side of P.W. Board for this model are subject to change for improvement without prior notice.
- Parts marked with “⚠” (▯ ▬ ▬ ▯) are important for maintaining the safety of the set. Be sure to replace these parts with specified ones for maintaining the safety and performance of the set.

REF. NO.	DESCRIPTION	POSITION
SW201	BAND SELECTOR	FM
SW301	BEAT CANCEL	C
SW302	RECORD/PLAYBACK	PLAYBACK
SW401	SURROUND MODE SELECT	LIVE
SW402	SURROUND ON/OFF	OFF
SW403	DUBBING SPEED/ BUILT-IN MICROPHONE/ FM MODE	HIGH/FM STEREO
SW404	FUNCTION SELECTOR	TAPE
SW501	TAPE 2 MAIN	OFF
SW502	TAPE 1 MAIN	OFF
SW503	TAPE 2 PLAY	OFF
SW504	TAPE 2 DIRECTION	A
SW505	VOLTAGE SELECTOR	AC220-240V

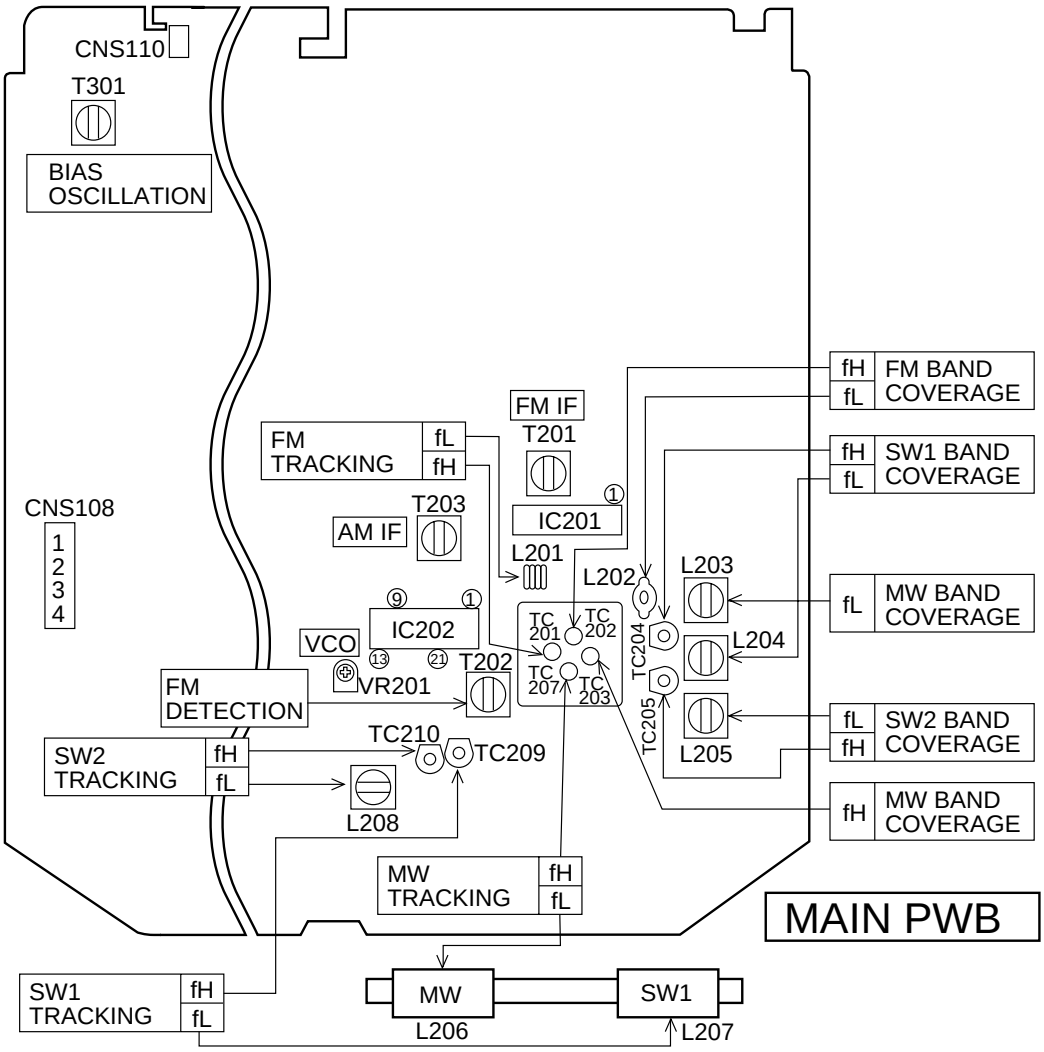

Figure 6 ADJUSTMENT POINTS

NOTES ON SCHEMATIC DIAGRAM

- Resistor:
  To differentiate the units of resistors, The symbol as K and M are used: the symbol K means 1000 ohm and the symbol M means 1000 kohm and the resistor without any symbol is an ohm resistor. The resistor designated “Fusible” is a fuse type resistor.
- Capacitor:
  To indicate the unit of capacitor, a symbol P is used: this symbol P means pico-farad and the unit of the capacitor without such a symbol is microfarad. As to electrolytic capacitor, the expression “capacitance/withstand voltage” is used.
  (CH),(RH),(UJ): Temperature compensation
  (ML): Mylar type
  (S): Styrol type
- The indicated voltage in each section is the one measured by Digital Multimeter between such a section and the chassis with no signal given.
- Schematic diagram and Wiring Side of P.W. Board for this model are subject to change for improvement without prior notice.
- Parts marked with “⚠” (▯ ▬ ▬ ▯) are important for maintaining the safety of the set. Be sure to replace these parts with specified ones for maintaining the safety and performance of the set.

REF. NO.	DESCRIPTION	POSITION
SW201	BAND SELECTOR	FM
SW301	BEAT CANCEL	C
SW302	RECORD/PLAYBACK	PLAYBACK
SW401	SURROUND MODE SELECT	LIVE
SW402	SURROUND ON/OFF	OFF
SW403	DUBBING SPEED/ BUILT-IN MICROPHONE/ FM MODE	HIGH/FM STEREO
SW404	FUNCTION SELECTOR	TAPE
SW501	TAPE 2 MAIN	OFF
SW502	TAPE 1 MAIN	OFF
SW503	TAPE 2 PLAY	OFF
SW504	TAPE 2 DIRECTION	A
SW505	VOLTAGE SELECTOR	AC220-240V

VOLTAGE

IC101-105 (AN6884): Spectrum Analyzer

PIN	1	2	3	4	5	6	7	8	9
RADIO	6.13V	6.16V	6V	6V	0V	6V	0V	0V	6.5V
TAPE PLAY	6V	6V	6V	6V	0V	6V	0V	0V	6.5V
TAPE REC	6V	6V	6V	6V	0V	6V	0V	0V	6.5V

IC106-108 (BA4558): Ope Amp.

PIN	1	2	3	4	5	6	7	8
RADIO	6V	6V	6V	0V	6V	0V	6V	7V
TAPE PLAY	6V	6V	6V	0V	6V	0V	6V	7V
TAPE REC	6V	6V	6V	0V	6V	0V	6V	7V

IC201 (LA1186N): FM Front End

PIN	1	2	3	4	5	6	7	8	9
FM	1V	1.8V	0V	0V	0V	5V	1.4V	4V	5V
AM	0V	0V	0V	0V	0V	0V	0V	0V	0V
TAPE	0V	0V	0V	0V	0V	0V	0V	0V	0V

IC202 (LA1805): IF Amp, & FM MPX.

PIN	1	2	3	4	5	6	7	8	9	10	11	12
FM	1.4V	1.4V	5.6V	0.6V	1.5V	0V	0V	0V	2.3V	2.3V	5V	1V
AM	1.6V	1.6V	6V	0.6V	0V	0V	0V	0V	2.4V	2.4V	0.5V	1V
TAPE	0V	0V	0V	0V	0V	0V	0V	0V	0V	0V	0V	0V
PIN	13	14	15	16	17	18	19	20	21	22	23	24
FM	1V	1V	2V	1V	1.8V	1.5V	1.6V	0.4V	5.7V	5.7V	1.62V	1.62V
AM	1.8V	1.8V	1.8V	1.8V	1.8V	1.6V	0.6V	6.6V	6.6V	1.67V	1.67V	1.4V
TAPE	0V	0V	0V	0V	0V	0V	0V	0V	0V	0V	0V	0V

IC301 (TA8189N): Record/Playback Amp.

PIN	1	2	3	4	5	6	7	8	9	10	11	12
RADIO	0.98V	0.98V	2.11V	1.57V	5.7V	4.8V	0V	0V	2V	1.2V	0V	0V
TAPE PLAY	0.98V	0.98V	2.11V	1.6V	5.7V	4.8V	0V	0V	2V	1.2V	0V	0V
TAPE REC	0.98V	0.98V	2.11V	1.6V	5.7V	4.8V	0V	0V	2V	1.2V	0V	0V
PIN	13	14	15	16	17	18	19	20	21	22	23	24
RADIO	1.4V	0V	1.29V	2V	1.4V	5.8V	0V	5.7V	5.3V	2V	1V	1V
TAPE PLAY	1.4V	0V	1.29V	2V	1.4V	5.8V	0V	5.7V	5.3V	2V	1V	1V
TAPE REC	1.4V	0V	1.29V	2V	1.4V	5.8V	0V	5.7V	5.3V	2V	1V	1V

IC401 (BA4558): Ope Amp.

PIN	1	2	3	4	5	6	7	8
RADIO	3.3V	3.3V	3.3V	0V	3.3V	3.3V	3.3V	6.7V
TAPE PLAY	3.3V	3.3V	3.3V	0V	3.3V	3.3V	3.3V	6.7V
TAPE REC	3.3V	3.3V	3.3V	0V	3.3V	3.3V	3.3V	6.7V

IC402 (LA4558): Power Amp.

PIN	1	2	3	4	5	6	7	8	9	10
RADIO	14.5V	0.01V	1.1V	7.6V	0.6V	13.6V	0V	15V	13.7V	0.6V
TAPE PLAY	14.5V	0.01V	1.1V	7.6V	0.6V	13.6V	0V	15V	13.7V	0.6V
TAPE REC	14.5V	0.01V	1.1V	7.6V	0.6V	13.6V	0V	15V	13.7V	0.6V
PIN	11	12	13	14						
RADIO	7.6V	1.1V	0.01V	0V						
TAPE PLAY	7.6V	1.1V	0.01V	0V						
TAPE REC	7.6V	1.1V	0.01V	0V						

TRANSISTOR	RADIO			TAPE PLAY			TAPE REC		
	e	b	c	e	b	c	e	b	c
Q101	0V	0.63V	3.27V	0V	0.63V	3.27V			
Q102	0V	0.63V	3.35V	0V	0.63V	3.35V			
Q103	7.36V	6.52V	7.28V	7.36V	6.52V	7.28V			
Q106	0V	0.69V	0.1V	0V	0.69V	0V			
Q107	7.38V	6.54V	7.3V	7.38V	6.54V	7.3V			
Q108	7.98V	7.37V	13.67V	7.98V	7.37V	13.67V			
Q202	0.32V	0.98V	2.88V	0.32V	0.98V	2.88V			
Q203	0.32V	0.98V	2.85V	0.32V	0.98V	2.85V			
Q301	0V	0.27V	0.27V	0V	0.27V	0.27V	0.05V	–0.18V	6.2V
Q302	0V	0V	0.4V	0V	0V	0.4V			
Q303	0.5V	1.18V	5.53V	0.5V	1.18V	5.53V	0.5V	1.18V	5.53V
Q401	0V	0V	0V	0V	0V	0V			
Q402	0V	0V	0V	0V	0V	0V			
Q501	7.43V	8.06V	13.14V	7.43V	8.06V	13.14V			
Q502	0V	0V	0V	15V	0V	8.8V	15V	0V	8.8V
Q503	–1.74V	0V	–						
Q504	0V	0.7V	0V	0V	0.70V	0V	–		
Q505	0V	0V	0.7V	0V	0V	0.7V	0V	0.7V	
Q506	15.01V	14.23V	14.98V	15.01V	14.23V	14.98V			
Q507	0V	0.74V	0.12V	0V	0.74V	0.12V	0V	0.74V	0.12V
Q508	1.93V	2.57V	3.82V	1.93V	2.57V	3.82V	1.93V	2.57V	3.82V
Q509	0V	0V	0V	0V	0V	0V			

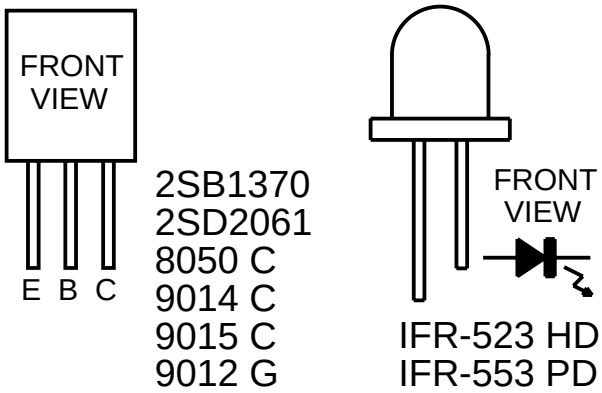

Figure 7 TYPE OF TRANSISTOR AND LED

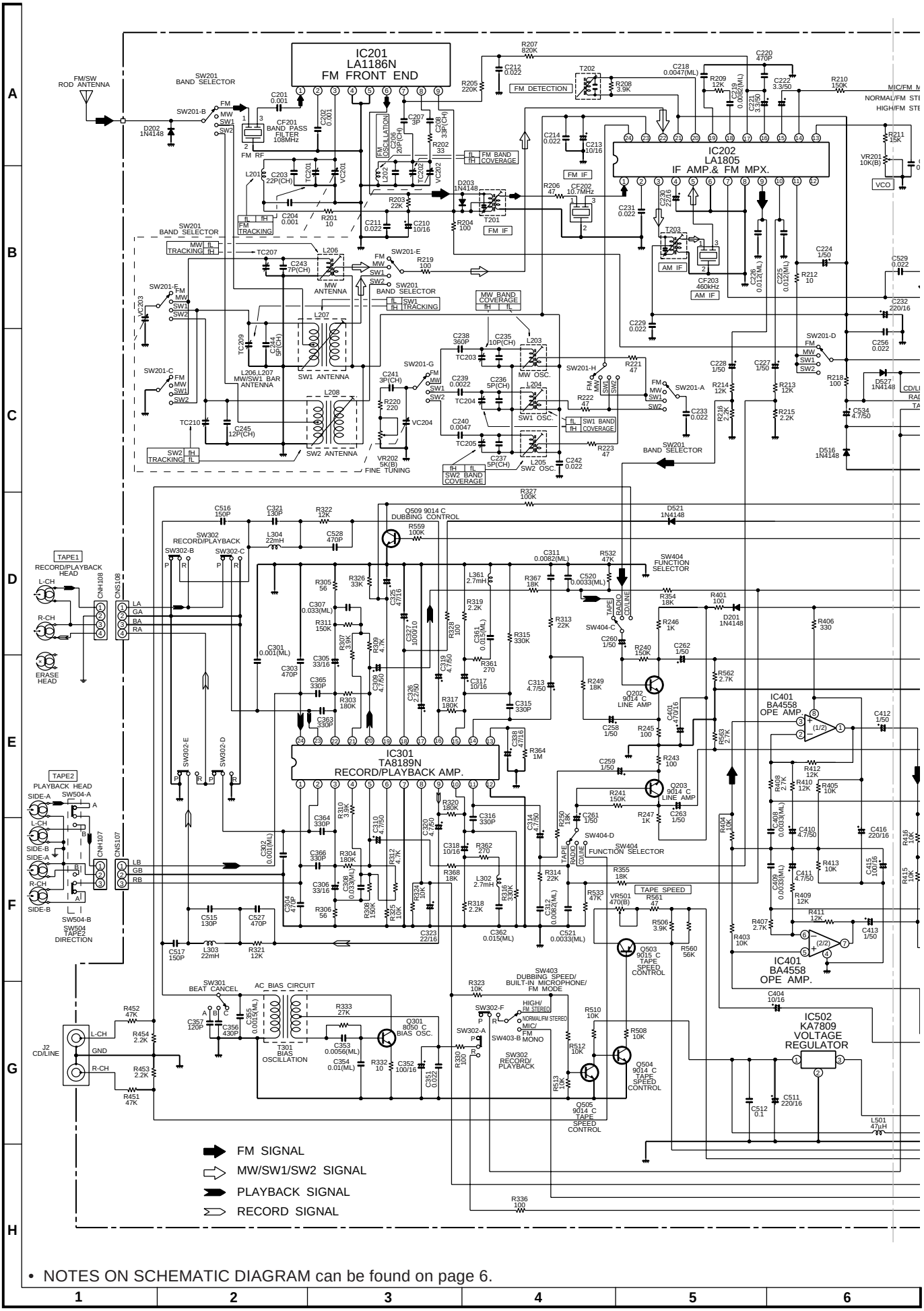

• NOTES ON SCHEMATIC DIAGRAM can be found on page 6.

Figure 8 SCHEMATIC DIAGRAM (1/4)

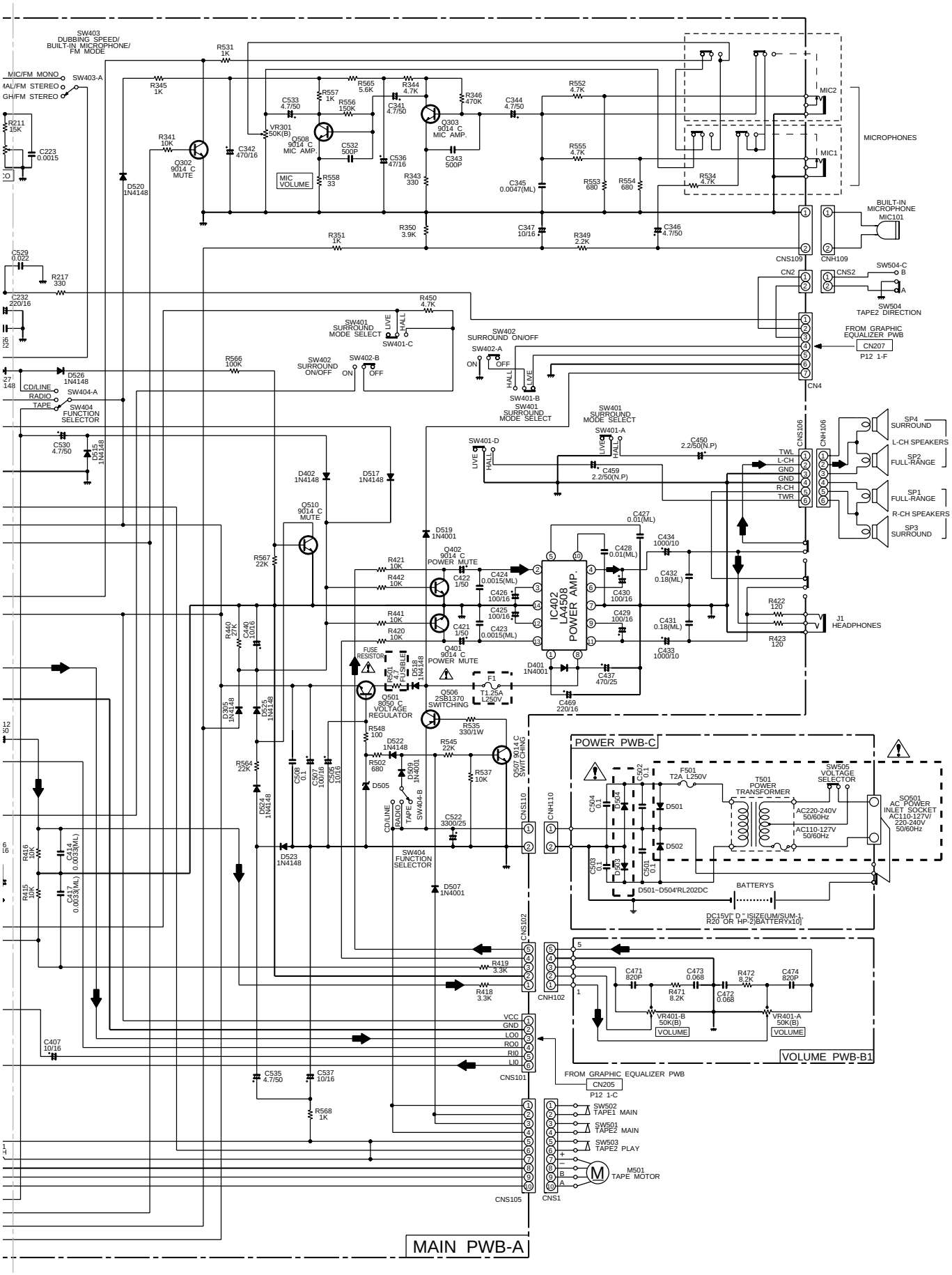

7	8	9	10	11	12

Figure 9 SCHEMATIC DIAGRAM (2/4)

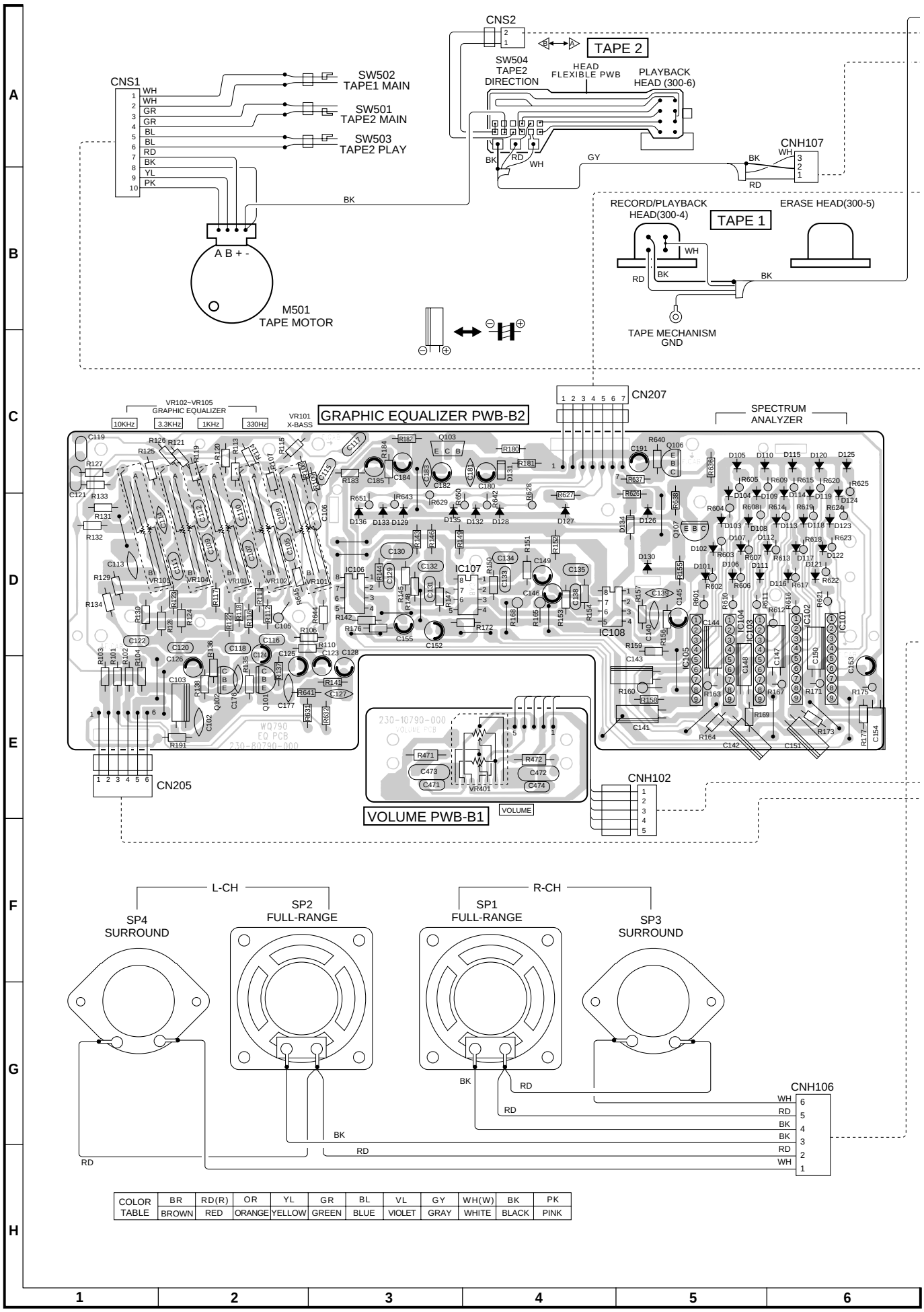

COLOR TABLE	BR	RD(R)	OR	YL	GR	BL	VL	GY	WH(W)	BK	PK
	BROWN	RED	ORANGE	YELLOW	GREEN	BLUE	VIOLET	GRAY	WHITE	BLACK	PINK

Figure 10 WIRING SIDE OF P.W.BOARD (1/3)

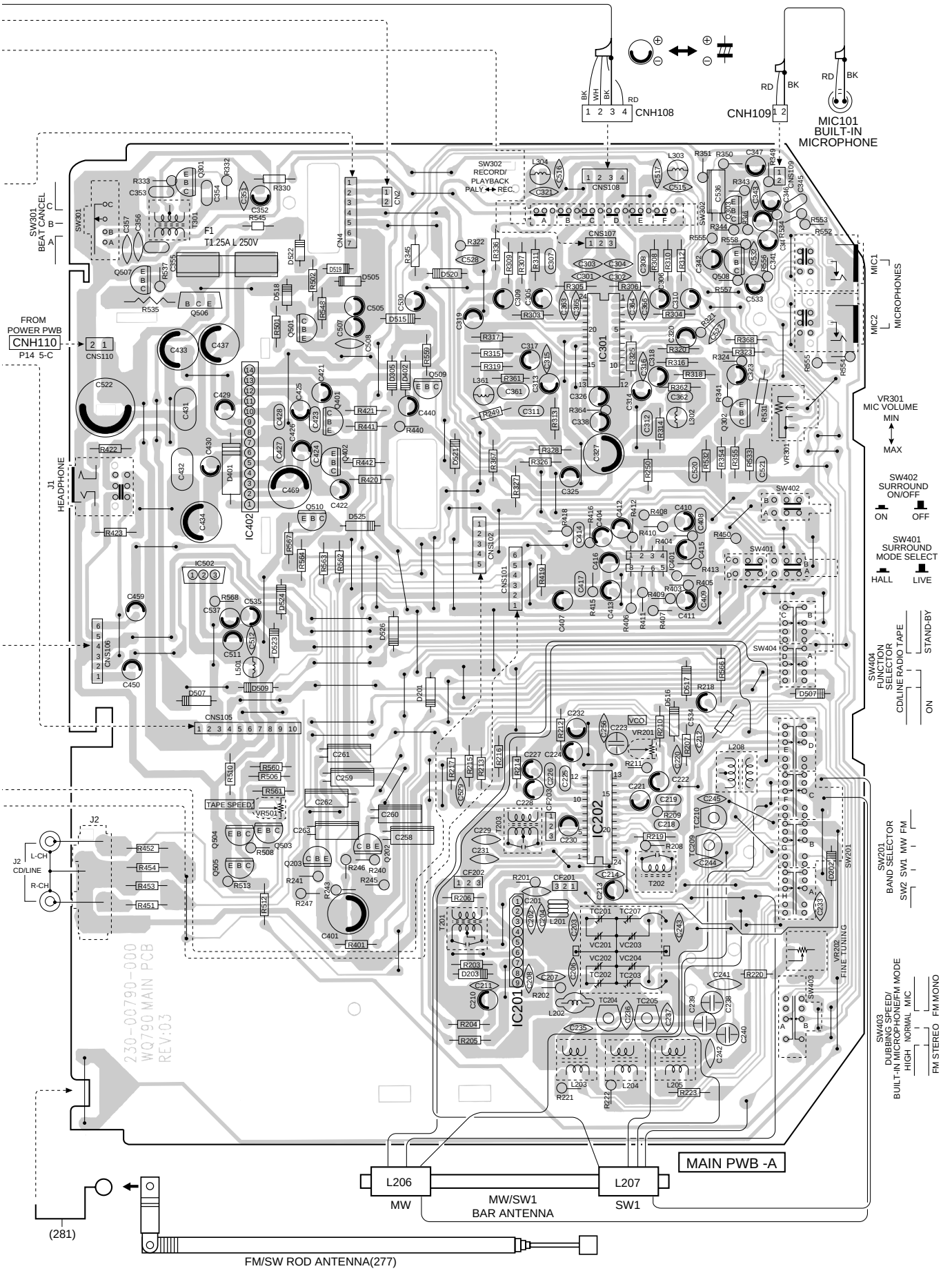

7	8	9	10	11	12

Figure 11 WIRING SIDE OF P.W.BOARD (2/3)

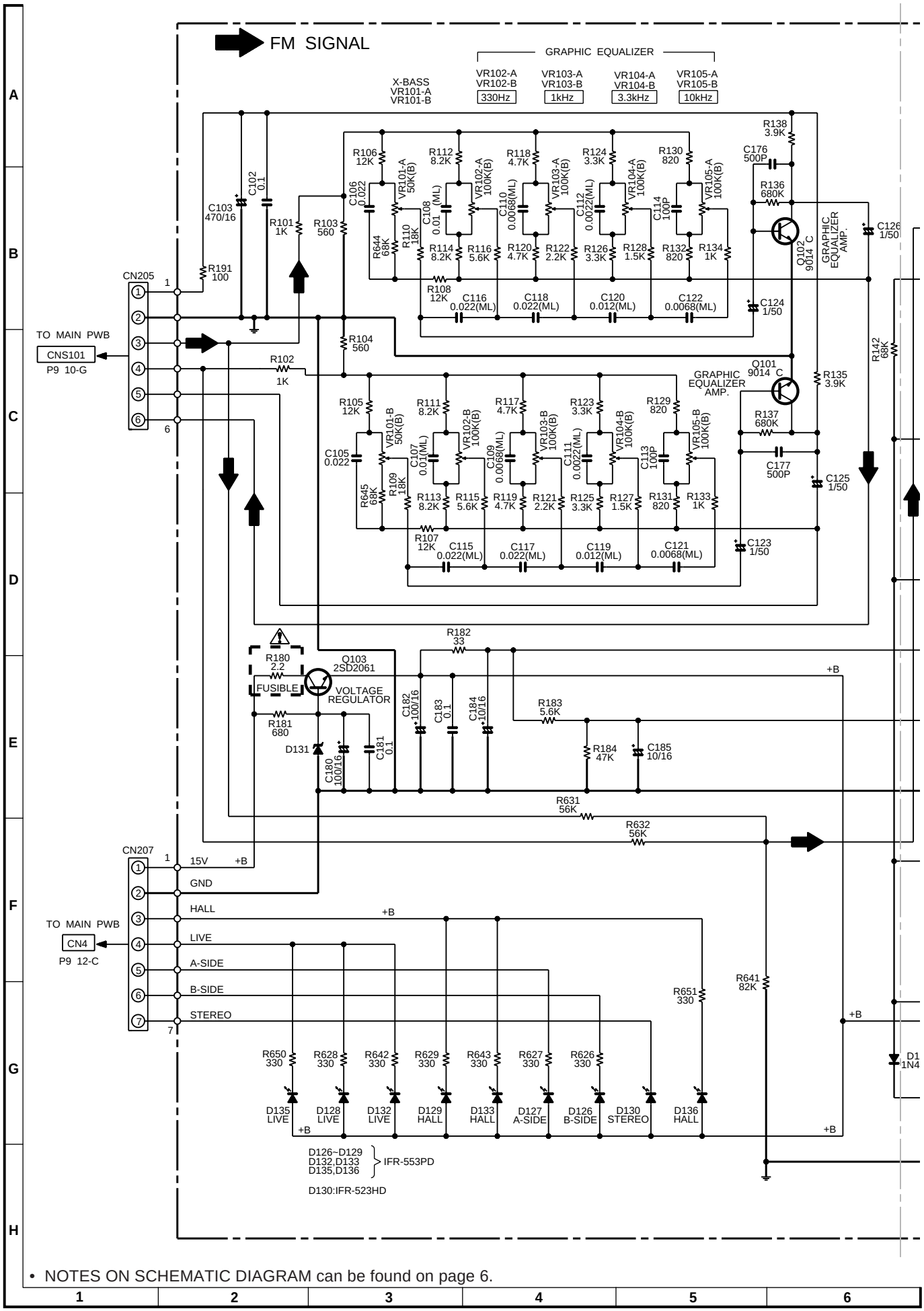

• NOTES ON SCHEMATIC DIAGRAM can be found on page 6.

Figure 12 SCHEMATIC DIAGRAM (3/4)

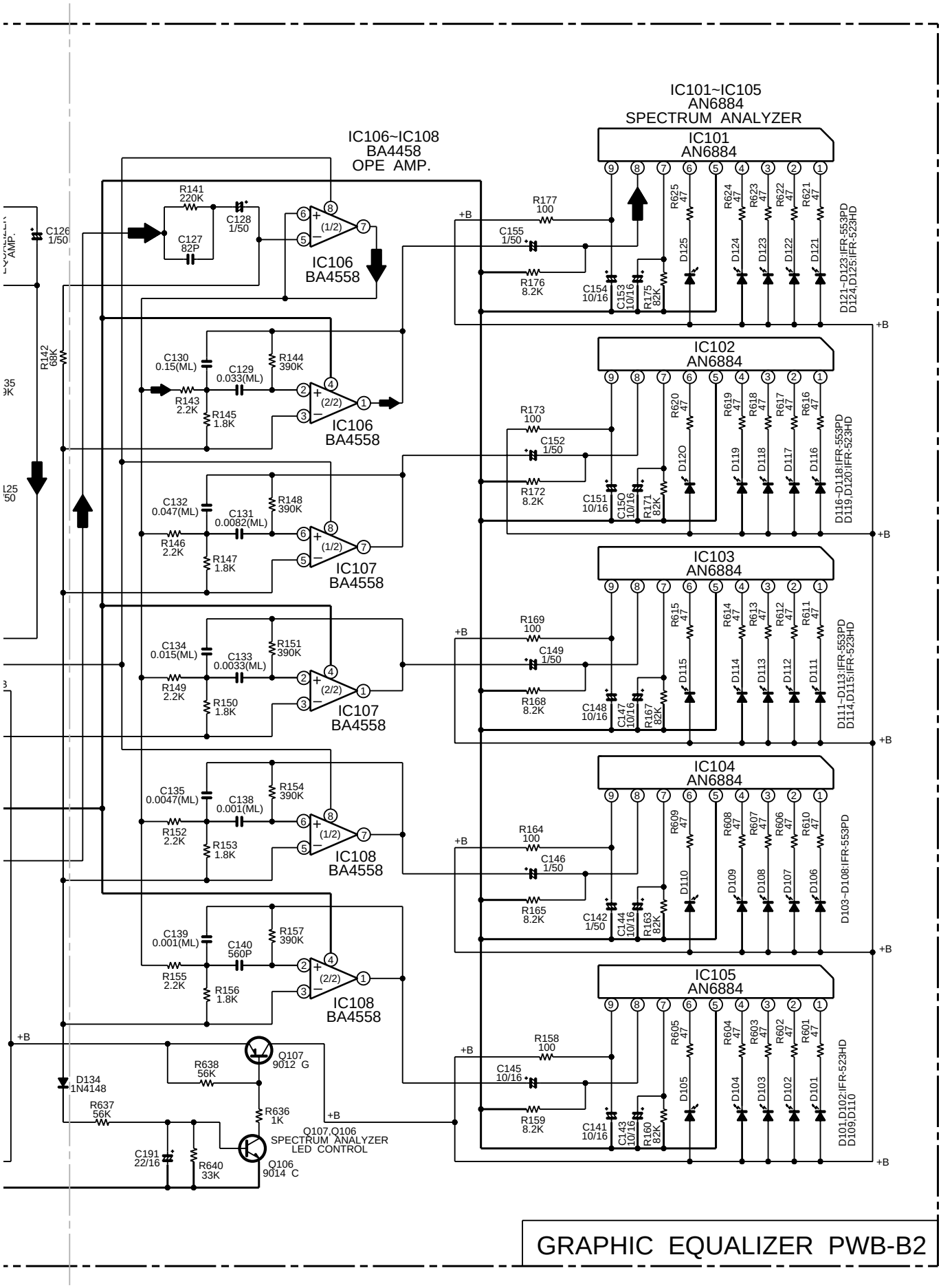

7	8	9	10	11	12

Figure 13 SCHEMATIC DIAGRAM (4/4)

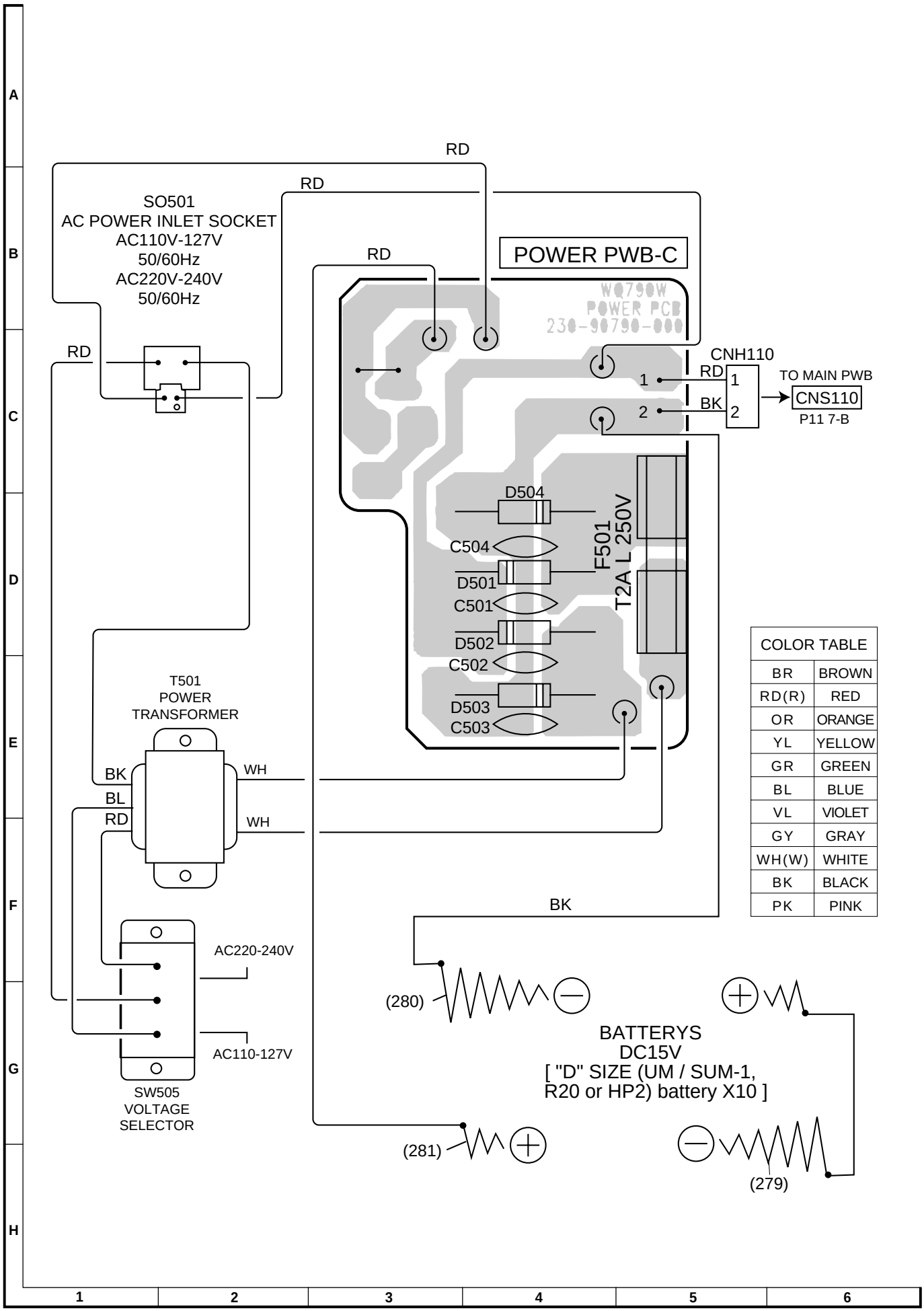

Figure 14 WIRING SIDE OF P.W.BOARD (3/3)

SHARP PARTS GUIDE

MODEL WQ-790W

"HOW TO ORDER REPLACEMENT PARTS"

To have your order filled promptly and correctly, please furnish the following information.

1. MODEL NUMBER
2. REF. No.
3. PART NO.
4. DESCRIPTION

★ MARK: SPARE PARTS-DELIVERY SECTION

For U.S.A. only

Contact your nearest SHARP Parts Distributor to order.

For location of SHARP Parts Distributor,
Please call Toll-Free;
1-800-BE-SHARP

Explanation of capacitors/resistors parts codes

Capacitors

VCC ..... Ceramic type
VCK ..... Ceramic type
VCT ..... Semiconductor type
VC • • MF ..... Cylindrical type (without lead wire)
VC • • MN ..... Cylindrical type (without lead wire)
VC • • TV ..... Square type (without lead wire)
VC • • TQ ..... Square type (without lead wire)
VC • • CY ..... Square type (without lead wire)
VC • • CZ ..... Square type (without lead wire)
VC • • • • • • • • • J .. The 13th character represents capacity difference. ("J" ±5%, "K" ±10%, "M" ±20%, "N" ±30%, "C" ±0.25 pF, "D" ±0.5 pF, "Z" +80-20%.)

If there are no indications for the electrolytic capacitors, error is ±20%.

Resistors

VRD ..... Carbon-film type
VRS ..... Carbon-film type
VRN ..... Metal-film type
VR • • MF ..... Cylindrical type (without lead wire)
VR • • MN ..... Cylindrical type (without lead wire)
VR • • TV ..... Square type (without lead wire)
VR • • TQ ..... Square type (without lead wire)
VR • • CY ..... Square type (without lead wire)
VR • • CZ ..... Square type (without lead wire)
VR • • • • • • • • • J .. The 13th character represents error. ("J" ±5%, "F" ±1%, "D" ±0.5%.)

If there are no indications for other parts, the resistors are ±5% carbon-film type.

NOTE:
Parts marked with "⚠" are important for maintaining the safety of the set.
Be sure to replace parts with specified ones for maintaining the safety and performance of the set.

WQ-790W

NO.	PART CODE	★	PRICE RANK	DESCRIPTION
INTEGRATED CIRCUITS				
IC101~105	9FF28406884000	J		Spectrum Analyzer,AN6884
IC106~108	9FF28404558000	J		Ope Amp.,BA4558
IC201	VHILA1186N/-1	J	AE	FM Front End,LA1186N
IC202	VHILA1805//-1	J	AM	IF Amp.& FM MPX.,LA1805
IC301	9FF28408189000	J		Record/Playback Amp.,TA8189N
IC401	VHIBA4558//-1	J	AD	Ope Amp.,BA4558
IC402	9FF28404508000	J		Power Amp.,LA4508
IC502	9FF28407809000	J		Voltage Regulator,KA7809
TRANSISTORS				
Q101,102	9FF2830901403	J	AC	Silicon,NPN,9014 C
Q103	9FF28302061000	J		Silicon,NPN,2SD2061
Q106	9FF2830901403	J	AC	Silicon,NPN,9014 C
Q107	9FF2830901207	J		Silicon,PNP,9012 G
Q202,203	9FF2830901403	J	AC	Silicon,NPN,9014 C
Q301	9FF28308050030	J		Silicon,NPN,8050 C
Q302,303	9FF2830901403	J	AC	Silicon,NPN,9014 C
Q401,402	9FF2830901403	J	AC	Silicon,NPN,9014 C
Q501	9FF28308050030	J		Silicon,NPN,8050 C
Q503	9FF2830901503	J		Silicon,PNP,9015 C
Q504,505	9FF2830901403	J	AC	Silicon,NPN,9014 C
Q506	9FF2830137000	J		Silicon,PNP,2SB1370
Q507~510	9FF2830901403	J	AC	Silicon,NPN,9014 C
DIODES				
D101,102	9FF24600125050	J	AC	LED,Red,IFR-523HD
D103~108	9FF24600790050	J		LED,Green,IFR-553PD
D109,110	9FF24600125050	J	AC	LED,Red,IFR-523HD
D111~113	9FF24600790050	J		LED,Green,IFR-553PD
D114,115	9FF24600125050	J	AC	LED,Red,IFR-523HD
D116~118	9FF24600790050	J		LED,Green,IFR-553PD
D119,120	9FF24600125050	J	AC	LED,Red,IFR-523HD
D121~123	9FF24600790050	J		LED,Green,IFR-553PD
D124,125	9FF24600125050	J	AC	LED,Red,IFR-523HD
D126~129	9FF24600790050	J		LED,Green,IFR-553PD
D130	9FF24600125050	J	AC	LED,Red,IFR-523HD
D131	9FF28200820000	J	AC	Zener,8.2V
D132,133	9FF24600790050	J		LED,Green,IFR-553PD
D134	9FF2810414800	J	AB	Silicon,1N4148
D135,136	9FF24600790050	J		LED,Green,IFR-553PD
D201~203	VHD1N4148//-1	J	AA	Silicon,1N4148
D305	VHD1N4148//-1	J	AA	Silicon,1N4148
D401	9FF2810400130	J		Silicon,1N4001
D402	VHD1N4148//-1	J	AA	Silicon,1N4148
⚠ D501~504	9FF28100202001	J		Silicon,RL202DC
D505	9FF28200820000	J	AC	Zener,8.2V
D507	9FF2810400130	J		Silicon,1N4001
D509	9FF2810400130	J		Silicon,1N4001
D515~518	VHD1N4148//-1	J	AA	Silicon,1N4148
D519	9FF2810400130	J		Silicon,1N4001
D520~527	VHD1N4148//-1	J	AA	Silicon,1N4148
FILTERS				
CF201	9FF27310205031	J		Band Pass Filter,108 MHz
CF202	9FF27201075832	J	AE	FM IF,10.7 MHz
CF203	9FF2720460343	J	AE	AM IF,460 kHz
TRANSFORMERS				
T201	9FF29621805150	J	AD	FM IF
T202	9FF29621805170	J	AD	FM Detection
T203	9FF29601805140	J	AD	AM IF
T301	9FF30470790110	J		Bias Oscillation
⚠ T501	9FF29557790010	J		Power
COILS				
L201	9FF3004503108	J	AB	FM RF
L202	9FF30409611004	J	AD	FM Oscillation
L203	9FF30410125120	J	AC	MW Oscillation
L204	9FF30430125150	J	AC	SW1 Oscillation
L205	9FF30430125140	J	AC	SW2 Oscillation
L206	9FF29907515940	J	AC	MW Bar Antenna
L207	9FF29901704840	J	AC	SW1 Bar Antenna
L208	9FF30460125110	J	AC	SW2 Antenna
L302	9FF2940027200	J		2.7 mH,Choke
L303,304	9FF2940022300	J		22 mH,Choke
L361	9FF2940027200	J		2.7 mH,Choke
L501	9FF29400470000	J	AB	47 μF,Choke
VARIABLE RESISTORS				
VR101	9FF29213503120	J	AE	50 kohms (B)×2 [X-BASS]
VR102~105	9FF29213104110	J	AE	100 kohm (B)×2 [Graphic Equalizer]
VR201	9FF29800103204	J	AC	10 kohm (B),Semi-VR [VCO]
VR301	9FF29200503110	J		50 kohms (B)×2 [Mic Volume]
VR401	9FF29201503110	J		50 kohms (B)×2 [Volume]
VR501	9FF29800471204	J		470 ohms (B),Semi-VR [Tape Speed]
VARIABLE CAPACITORS				
TC204,205	9FF27800100011	J	AD	Trimmer,10 pF
TC209,210	9FF27800100011	J	AD	Trimmer,10 pF
VC201~204	9FF29733520790	J		Variable Capacitance with Trimmer (TC201~203,TC207)
VR202	9FF29200502110	J		Fine Tuning
CAPACITORS				
C102	VCKZPU1HF104Z	J	AB	0.1 μF,50V
C103	RC-GZA477AF1C	J	AC	470 μF,16V,Electrolytic
C105,106	VCQYKU1HM223K	J	AB	0.022 μF,50V,Mylar
C107,108	VCQYKU1HM103K	J	AA	0.01 μF,50V,Mylar
C109,110	VCQYKU1HM682K	J	AA	0.0068 μF,50V,Mylar
C111,112	VCQYKU1HM222K	J	AA	0.0022 μF,50V,Mylar
C113,114	VCCSPU1HL101K	J	AA	100 pF,50V
C115~118	VCQYKU1HM223K	J	AB	0.022 μF,50V,Mylar
C119,120	VCQYKU1HM123K	J	AA	0.012 μF,50V,Mylar
C121,122	VCQYKU1HM682K	J	AA	0.0068 μF,50V,Mylar
C123~126	RC-GZA105AF1H	J	AB	1 μF,50V,Electrolytic
C127	VCCSPU1HL820J	J	AA	82 pF,50V
C128	RC-GZA105AF1H	J	AB	1 μF,50V,Electrolytic
C129	VCQYKU1HM333K	J	AB	0.033 μF,50V,Mylar
C130	VCQYKU1HM154K	J	AC	0.15 μF,50V,Mylar
C131	VCQYKU1HM822K	J	AA	0.0082 μF,50V,Mylar
C132	VCQYKU1HM473K	J	AB	0.047 μF,50V,Mylar
C133	VCQYKU1HM332K	J	AA	0.0033 μF,50V,Mylar
C134	VCQYKU1HM153K	J	AA	0.015 μF,50V,Mylar
C135	VCQYKU1HM472K	J	AB	0.0047 μF,50V,Mylar
C138,139	VCQYKU1HM102K	J	AA	0.001 μF,50V,Mylar
C140	VCCSPU1HL561K	J	AA	560 pF,50V
C141	RC-GZA106AF1C	J	AB	10 μF,16V,Electrolytic
C142	RC-GZA105AF1H	J	AB	1 μF,50V,Electrolytic
C143~145	RC-GZA106AF1C	J	AB	10 μF,16V,Electrolytic
C146	RC-GZA105AF1H	J	AB	1 μF,50V,Electrolytic
C147,148	RC-GZA106AF1C	J	AB	10 μF,16V,Electrolytic
C149	RC-GZA105AF1H	J	AB	1 μF,50V,Electrolytic
C150,151	RC-GZA106AF1C	J	AB	10 μF,16V,Electrolytic
C152	RC-GZA105AF1H	J	AB	1 μF,50V,Electrolytic
C153,154	RC-GZA106AF1C	J	AB	10 μF,16V,Electrolytic
C155	RC-GZA105AF1H	J	AB	1 μF,50V,Electrolytic
C176,177	9FF2700050143	J		500 pF,50V
C180	RC-GZA107AF1C	J	AB	100 μF,16V,Electrolytic
C181	VCKZPU1HF104Z	J	AB	0.1 μF,50V
C182	RC-GZA107AF1C	J	AB	100 μF,16V,Electrolytic
C183	VCKZPU1HF104Z	J	AB	0.1 μF,50V
C184,185	RC-GZA106AF1C	J	AB	10 μF,16V,Electrolytic
C191	RC-GZA226AF1C	J	AB	22 μF,16V,Electrolytic
C201,202	VCKYPU1HB102K	J	AA	0.001 μF,50V
C203	VCCCPU1HH220J	J	AA	22 pF (CH),50V
C204	VCKYPU1HB102K	J	AA	0.001 μF,50V
C206	VCCCPU1HH200J	J	AA	20 pF (CH),50V
C207	VCCCPU1HH3R0C	J	AA	3 pF (CH),50V
C208	VCCCPU1HH330J	J	AA	33 pF (CH),50V
C210	RC-GZA106AF1C	J	AB	10 μF,16V,Electrolytic
C211,212	VCKZPU1HF223Z	J	AA	0.022 μF,50V
C213	RC-GZA106AF1C	J	AB	10 μF,16V,Electrolytic
C214	VCKZPU1HF223Z	J	AA	0.022 μF,50V
C218	VCQYKU1HM472K	J	AB	0.0047 μF,50V,Mylar
C219	VCQYKU1HM822K	J	AA	0.0082 μF,50V,Mylar
C220	VCKYPU1HB471K	J	AA	470 pF,50V
C221,222	RC-GZA335AF1H	J	AB	3.3 μF,50V,Electrolytic
C223	9FF27701522200	J	AC	0.0015 μF,50V,Polystylene
C224	RC-EZD105AF1H	J	AB	1 μF,50V,Electrolytic
C225,226	VCQYKU1HM123K	J	AA	0.012 μF,50V,Mylar
C227,228	RC-EZD105AF1H	J	AB	1 μF,50V,Electrolytic
C229	VCKZPU1HF223Z	J	AA	0.022 μF,50V

NO.	PART CODE	★	PRICE RANK	DESCRIPTION
C230	RC-GZA226AF1C	J	AB	22 µF,16V,Electrolytic
C231	VCKZPU1HF223Z	J	AA	0.022 µF,50V
C232	RC-GZA227AF1C	J	AB	220 µF,16V,Electrolytic
C233	VCKZPU1HF223Z	J	AA	0.022 µF,50V
C235	VCCCPU1HH100K	J	AA	10 pF (CH),50V
C236,237	VCCCPU1HH5R0C	J	AA	5 pF (CH),50V
C238	9FF27703612200	J	AC	360 pF,50V,Polystylene
C239	9FF27702222200	J		0.0022 µF,50V,Polystylene
C240	9FF27704722200	J	AC	0.0047 µF,50V,Polystylene
C241	VCCCPU1HH3R0C	J	AA	3 pF (CH),50V
C242	VCKZPU1HF223Z	J	AA	0.022 µF,50V
C243	VCCCPU1HH7R0C	J	AA	7 pF (CH),50V
C244	VCCCPU1HH5R0C	J	AA	5 pF (CH),50V
C245	VCCCPU1HH120J	J	AA	12 pF (CH),50V
C256	VCKZPU1HF223Z	J	AA	0.022 µF,50V
C258~263	RC-EZD105AF1H	J	AB	1 µF,50V,Electrolytic
C301,302	VCQYKU1HM102K	J	AA	0.001 µF,50V,Mylar
C303,304	VCKYPU1HB471K	J	AA	470 pF,50V
C305,306	RC-GZA336AF1C	J	AB	33 µF,16V,Electrolytic
C307,308	VCQYKU1HM333K	J	AB	0.033 µF,50V,Mylar
C309,310	RC-GZA475AF1H	J	AB	4.7 µF,50V,Electrolytic
C311,312	VCQYKU1HM822K	J	AA	0.0082 µF,50V,Mylar
C313,314	RC-GZA475AF1H	J	AB	4.7 µF,50V,Electrolytic
C315,316	VCCSPU1HL331K	J	AA	330 pF,50V
C317,318	RC-GZA106AF1C	J	AB	10 µF,16V,Electrolytic
C319,320	RC-GZA475AF1H	J	AB	4.7 µF,50V,Electrolytic
C321	9FF2700013143	J		130 pF,50V
C323	RC-GZA226AF1C	J	AB	22 µF,16V,Electrolytic
C325	RC-GZA476AF1C	J	AB	47 µF,16V,Electrolytic
C326	RC-GZA225AF1H	J	AB	2.2 µF,50V,Electrolytic
C327	RC-GZA108AF1A	J	AD	1000 µF,10V,Electrolytic
C338	RC-GZA476AF1C	J	AB	47 µF,16V,Electrolytic
C341	RC-GZA475AF1H	J	AB	4.7 µF,50V,Electrolytic
C342	RC-GZA477AF1C	J	AC	470 µF,16V,Electrolytic
C343	9FF2700050143	J		500 pF,50V
C344	RC-GZA475AF1H	J	AB	4.7 µF,50V,Electrolytic
C345	VCQYKU1HM472K	J	AB	0.0047 µF,50V,Mylar
C346	RC-GZA475AF1H	J	AB	4.7 µF,50V,Electrolytic
C347	RC-GZA106AF1C	J	AB	10 µF,16V,Electrolytic
C351	VCKZPU1HF223Z	J	AA	0.022 µF,50V
C352	RC-GZA107AF1C	J	AB	100 µF,16V,Electrolytic
C353	VCQYKU1HM562K	J	AA	0.0056 µF,50V,Mylar
C354	VCQYKU1HM103K	J	AA	0.01 µF,50V,Mylar
C355	VCQYKU1HM152K	J	AA	0.0015 µF,50V,Mylar
C356	9FF2700043143	J		430 pF,50V
C357	VCCSPU1HL121K	J	AA	120 pF,50V
C361,362	VCQYKU1HM153K	J	AA	0.015 µF,50V,Mylar
C363~366	VCCSPU1HL331K	J	AA	330 pF,50V
C401	RC-GZA477AF1C	J	AC	470 µF,16V,Electrolytic
C404	RC-GZA106AF1C	J	AB	10 µF,16V,Electrolytic
C407	RC-GZA106AF1C	J	AB	10 µF,16V,Electrolytic
C408,409	VCQYKU1HM332K	J	AA	0.0033 µF,50V,Mylar
C410,411	RC-GZA475AF1H	J	AB	4.7 µF,50V,Electrolytic
C412,413	RC-EZD105AF1H	J	AB	1 µF,50V,Electrolytic
C414	VCQYKU1HM332K	J	AA	0.0033 µF,50V,Mylar
C415	RC-GZA107AF1C	J	AB	100 µF,16V,Electrolytic
C416	RC-GZA227AF1C	J	AB	220 µF,16V,Electrolytic
C417	VCQYKU1HM332K	J	AA	0.0033 µF,50V,Mylar
C421,422	RC-EZD105AF1H	J	AB	1 µF,50V,Electrolytic
C423,424	VCQYKU1HM152K	J	AA	0.0015 µF,50V,Mylar
C425,426	RC-GZA107AF1C	J	AB	100 µF,16V,Electrolytic
C427,428	VCQYKU1HM103K	J	AA	0.01 µF,50V,Mylar
C429,430	RC-GZA107AF1C	J	AB	100 µF,16V,Electrolytic
C431,432	VCQYKU1HM184K	J	AD	0.18 µF,50V,Mylar
C433,434	RC-GZA108AF1A	J	AD	1000 µF,10V,Electrolytic
C437	RC-GZA477AF1E	J	AC	470 µF,25V,Electrolytic
C440	RC-GZA106AF1C	J	AB	10 µF,16V,Electrolytic
C450	9FF27540225071	J	AC	2.2 µF,50V,Non Polar
C459	9FF27540225071	J	AC	2.2 µF,50V,Non Polar
C469	RC-GZA227AF1C	J	AB	220 µF,16V,Electrolytic
C471	VCKYPU1HB821K	J	AA	820 pF,50V
C472,473	VCQYKU1HM683K	J	AB	0.068 µF,50V,Mylar
C474	VCKYPU1HB821K	J	AA	820 pF,50V
C501~504	VCKZPA1HF104Z	J	AA	0.1 µF,50V
C505	RC-GZA106AF1C	J	AB	10 µF,16V,Electrolytic
C507	RC-GZA107AF1C	J	AB	100 µF,16V,Electrolytic
C508	VCKYPU1HF104Z	J		0.1 µF,50V
C511	RC-GZA227AF1C	J	AB	220 µF,16V,Electrolytic
C512	VCKYPU1HF104Z	J		0.1 µF,50V
C515	9FF2700013143	J		130 pF,50V
C516,517	VCCSPU1HL151K	J	AA	150 pF,50V
C520,521	VCQYKU1HM332K	J	AA	0.0033 µF,50V,Mylar

NO.	PARTS CODE	★	PRICE RANK	DESCRIPTION
C522	RC-GZW338AF1E	J	AG	3300 µF,25V,Electrolytic
C527,528	VCKYPU1HB471K	J	AA	470 pF,50V
C529	VCKZPU1HF223Z	J	AA	0.022 µF,50V
C530	RC-GZA475AF1H	J	AB	4.7 µF,50V,Electrolytic
C532	9FF2700050143	J		500 pF,50V
C533~535	RC-GZA475AF1H	J	AB	4.7 µF,50V,Electrolytic
C536	RC-GZA476AF1C	J	AB	47 µF,16V,Electrolytic
C537	RC-GZA106AF1C	J	AB	10 µF,16V,Electrolytic

RESISTORS

R101,102	VRD-ST2CD102J	J	AA	1 kohm,1/6W
R103,104	VRD-ST2CD561J	J	AA	560 ohms,1/6W
R105~108	VRD-ST2CD123J	J	AA	12 kohms,1/6W
R109,110	VRD-ST2CD183J	J	AA	18 kohms,1/6W
R111~114	VRD-ST2CD822J	J	AA	8.2 kohms,1/6W
R115,116	VRD-ST2CD562J	J	AA	5.6 kohms,1/6W
R117~120	VRD-ST2CD472J	J	AA	4.7 kohms,1/6W
R121,122	VRD-ST2CD222J	J	AA	2.2 kohms,1/6W
R123~126	VRD-ST2CD332J	J	AA	3.3 kohms,1/6W
R127,128	VRD-ST2CD152J	J	AA	1.5 kohms,1/6W
R129~132	VRD-ST2CD821J	J	AA	820 ohms,1/6W
R133,134	VRD-ST2CD102J	J	AA	1 kohm,1/6W
R135	VRD-ST2CD392J	J	AA	3.9 kohms,1/6W
R136,137	VRD-ST2CD684J	J	AA	680 kohms,1/6W
R138	VRD-ST2CD392J	J	AA	3.9 kohms,1/6W
R141	VRD-ST2CD224J	J	AA	220 kohms,1/6W
R142	VRD-ST2CD683J	J	AA	68 kohms,1/6W
R143	VRD-ST2CD222J	J	AA	2.2 kohms,1/6W
R144	VRD-ST2CD394J	J	AA	390 kohms,1/6W
R145	VRD-ST2CD182J	J	AA	1.8 kohms,1/6W
R146	VRD-ST2CD222J	J	AA	2.2 kohms,1/6W
R147	VRD-ST2CD182J	J	AA	1.8 kohms,1/6W
R148	VRD-ST2CD394J	J	AA	390 kohms,1/6W
R149	VRD-ST2CD222J	J	AA	2.2 kohms,1/6W
R150	VRD-ST2CD182J	J	AA	1.8 kohms,1/6W
R151	VRD-ST2CD394J	J	AA	390 kohms,1/6W
R152	VRD-ST2CD222J	J	AA	2.2 kohms,1/6W
R153	VRD-ST2CD182J	J	AA	1.8 kohms,1/6W
R154	VRD-ST2CD394J	J	AA	390 kohms,1/6W
R155	VRD-ST2CD222J	J	AA	2.2 kohms,1/6W
R156	VRD-ST2CD182J	J	AA	1.8 kohms,1/6W
R157	VRD-ST2CD394J	J	AA	390 kohms,1/6W
R158	VRD-ST2CD101J	J	AA	100 ohm,1/6W
R159	VRD-ST2CD822J	J	AA	8.2 kohms,1/6W
R160	VRD-ST2CD823J	J	AA	82 kohms,1/6W
R163	VRD-ST2CD823J	J	AA	82 kohms,1/6W
R164	VRD-ST2CD101J	J	AA	100 ohm,1/6W
R165	VRD-ST2CD822J	J	AA	8.2 kohms,1/6W
R167	VRD-ST2CD823J	J	AA	82 kohms,1/6W
R168	VRD-ST2CD822J	J	AA	8.2 kohms,1/6W
R169	VRD-ST2CD101J	J	AA	100 ohm,1/6W
R171	VRD-ST2CD823J	J	AA	82 kohms,1/6W
R172	VRD-ST2CD822J	J	AA	8.2 kohms,1/6W
R173	VRD-ST2CD101J	J	AA	100 ohm,1/6W
R175	VRD-ST2CD823J	J	AA	82 kohms,1/6W
R176	VRD-ST2CD822J	J	AA	8.2 kohms,1/6W
R177	VRD-ST2CD101J	J	AA	100 ohm,1/6W
⚠ R180	9FF32012213021	J		2.2 ohms,1/4W,Fusible
R181	VRD-ST2CD681J	J	AA	680 ohms,1/6W
R182	VRD-ST2CD330J	J	AA	33 ohms,1/6W
R183	VRD-ST2CD562J	J	AA	5.6 kohms,1/6W
R184	VRD-ST2CD473J	J	AA	47 kohms,1/6W
R191	VRD-ST2CD101J	J	AA	100 ohm,1/6W
R201	VRD-ST2EE100J	J	AA	10 ohm,1/4W
R202	VRD-ST2EE330J	J	AA	33 ohms,1/4W
R203	VRD-ST2EE223J	J	AA	22 kohms,1/4W
R204	VRD-ST2EE101J	J	AA	100 ohm,1/4W
R205	VRD-ST2EE224J	J	AA	220 kohms,1/4W
R206	VRD-ST2EE470J	J	AA	47 ohms,1/4W
R207	VRD-ST2EE824J	J	AA	820 kohms,1/4W
R208	VRD-ST2EE392J	J	AA	3.9 kohms,1/4W
R209	VRD-ST2EE123J	J	AA	12 kohms,1/4W
R210	VRD-ST2EE154J	J	AA	150 kohms,1/4W
R211	VRD-ST2EE153J	J	AA	15 kohms,1/4W
R212	VRD-ST2EE100J	J	AA	10 ohm,1/4W
R213,214	VRD-ST2EE123J	J	AA	12 kohms,1/4W
R215,216	VRD-ST2EE222J	J	AA	2.2 kohms,1/4W
R217	VRD-ST2EE331J	J	AA	330 ohms,1/4W
R218,219	VRD-ST2EE101J	J	AA	100 ohm,1/4W
R220	VRD-ST2EE221J	J	AA	220 ohms,1/4W
R221~223	VRD-ST2EE470J	J	AA	47 ohms,1/4W

WQ-790W

NO.	PART CODE	★	PRICE RANK	DESCRIPTION
R240,241	VRD-ST2EE154J	J	AA	150 kohms,1/4W
R243	VRD-ST2EE101J	J	AA	100 ohm,1/4W
R245	VRD-ST2EE101J	J	AA	100 ohm,1/4W
R246,247	VRD-ST2EE102J	J	AA	1 kohm,1/4W
R249,250	VRD-ST2EE183J	J	AA	18 kohms,1/4W
R303,304	VRD-ST2EE184J	J	AA	180 kohms,1/4W
R305,306	VRD-ST2EE560J	J	AA	56 ohms,1/4W
R307	VRD-ST2EE392J	J	AA	3.9 kohms,1/4W
R308	VRD-ST2EE154J	J	AA	150 kohms,1/4W
R309	VRD-ST2EE472J	J	AA	4.7 kohms,1/4W
R310	VRD-ST2EE392J	J	AA	3.9 kohms,1/4W
R311	VRD-ST2EE154J	J	AA	150 kohms,1/4W
R312	VRD-ST2EE472J	J	AA	4.7 kohms,1/4W
R313,314	VRD-ST2EE223J	J	AA	22 kohms,1/4W
R315,316	VRD-ST2EE334J	J	AA	330 kohms,1/4W
R317	VRD-ST2EE184J	J	AA	180 kohms,1/4W
R318,319	VRD-ST2EE222J	J	AA	2.2 kohms,1/4W
R320	VRD-ST2EE184J	J	AA	180 kohms,1/4W
R321,322	VRD-ST2EE123J	J	AA	12 kohms,1/4W
R323~325	VRD-ST2EE103J	J	AA	10 kohm,1/4W
R326	VRD-ST2EE333J	J	AA	33 kohms,1/4W
R327	VRD-ST2EE104J	J	AA	100 kohm,1/4W
R328	VRD-ST2EE101J	J	AA	100 ohm,1/4W
R330	VRD-ST2EE101J	J	AA	100 ohm,1/4W
R332	VRD-ST2EE100J	J	AA	10 ohm,1/4W
R333	VRD-ST2EE273J	J	AA	27 kohms,1/4W
R336	VRD-ST2EE101J	J	AA	100 ohm,1/4W
R341	VRD-ST2EE103J	J	AA	10 kohm,1/4W
R343	VRD-ST2EE331J	J	AA	330 ohms,1/4W
R344	VRD-ST2EE472J	J	AA	4.7 kohms,1/4W
R345	VRD-ST2EE102J	J	AA	1 kohm,1/4W
R346	VRD-ST2EE474J	J	AA	470 kohms,1/4W
R349	VRD-ST2EE222J	J	AA	2.2 kohms,1/4W
R350	VRD-ST2EE392J	J	AA	3.9 kohms,1/4W
R351	VRD-ST2EE102J	J	AA	1 kohm,1/4W
R354,355	VRD-ST2EE183J	J	AA	18 kohms,1/4W
R361,362	VRD-ST2EE271J	J	AA	270 ohms,1/4W
R364	VRD-ST2EE105J	J	AA	1 Mohm,1/4W
R367,368	VRD-ST2EE183J	J	AA	18 kohms,1/4W
R401	VRD-ST2EE101J	J	AA	100 ohm,1/4W
R403~405	VRD-ST2EE103J	J	AA	10 kohm,1/4W
R406	VRD-ST2EE331J	J	AA	330 ohms,1/4W
R407,408	VRD-ST2EE272J	J	AA	2.7 kohms,1/4W
R409~412	VRD-ST2EE123J	J	AA	12 kohms,1/4W
R413	VRD-ST2EE103J	J	AA	10 kohm,1/4W
R415,416	VRD-ST2EE103J	J	AA	10 kohm,1/4W
R418,419	VRD-ST2EE332J	J	AA	3.3 kohms,1/4W
R420,421	VRD-ST2EE103J	J	AA	10 kohm,1/4W
R422,423	VRD-ST2EE121J	J	AA	120 ohms,1/4W
R440	VRD-ST2EE273J	J	AA	27 kohms,1/4W
R441,442	VRD-ST2EE103J	J	AA	10 kohm,1/4W
R450	VRD-ST2EE472J	J	AA	4.7 kohms,1/4W
R451,452	VRD-ST2EE473J	J	AA	47 kohms,1/4W
R453,454	VRD-ST2EE222J	J	AA	2.2 kohms,1/4W
R471,472	VRD-ST2EE822J	J	AA	8.2 kohms,1/4W
⚠ R501	9FF32014713021	J		4.7 ohms,1/4W,Fusible
R502	VRD-ST2EE681J	J	AA	680 ohms,1/4W
R506	VRD-ST2EE392J	J	AA	3.9 kohms,1/4W
R508	VRD-ST2EE103J	J	AA	10 kohm,1/4W
R510	VRD-ST2EE103J	J	AA	10 kohm,1/4W
R512,513	VRD-ST2EE103J	J	AA	10 kohm,1/4W
R531	VRD-ST2EE102J	J	AA	1 kohm,1/4W
R532,533	VRD-ST2EE473J	J	AA	47 kohms,1/4W
R534	VRD-ST2EE472J	J	AA	4.7 kohms,1/4W
R535	9FF3200333304	J		330 ohms,1W
R537	VRD-ST2EE103J	J	AA	10 kohm,1/4W
R545	VRD-ST2EE223J	J	AA	22 kohms,1/4W
R548	VRD-ST2EE101J	J	AA	100 ohm,1/4W
R552	VRD-ST2EE472J	J	AA	4.7 kohms,1/4W
R553,554	VRD-ST2EE681J	J	AA	680 ohms,1/4W
R555	VRD-ST2EE472J	J	AA	4.7 kohms,1/4W
R556	VRD-ST2EE154J	J	AA	150 kohms,1/4W
R557	VRD-ST2EE102J	J	AA	1 kohm,1/4W
R558	VRD-ST2EE330J	J	AA	33 ohms,1/4W
R559	VRD-ST2EE104J	J	AA	100 kohm,1/4W
R560	VRD-ST2EE563J	J	AA	56 kohms,1/4W
R561	VRD-ST2EE470J	J	AA	47 ohms,1/4W
R562,563	VRD-ST2EE272J	J	AA	2.7 kohms,1/4W
R564	VRD-ST2EE223J	J	AA	22 kohms,1/4W
R565	VRD-ST2EE562J	J	AA	5.6 kohms,1/4W
R566	VRD-ST2EE104J	J	AA	100 kohm,1/4W
R567	VRD-ST2EE223J	J	AA	22 kohms,1/4W

NO.	PARTS CODE	★	PRICE RANK	DESCRIPTION
R568	VRD-ST2EE102J	J	AA	1 kohm,1/4W
R601~625	VRD-ST2CD470J	J	AA	47 ohms,1/6W
R626~629	VRD-ST2CD331J	J	AA	330 ohms,1/6W
R631,632	VRD-ST2CD563J	J	AA	56 kohms,1/6W
R636	VRD-ST2CD102J	J	AA	1 kohm,1/6W
R637,638	VRD-ST2CD563J	J	AA	56 kohms,1/6W
R640	VRD-ST2CD333J	J	AA	33 kohms,1/6W
R641	VRD-ST2CD823J	J	AA	82 kohms,1/6W
R642,643	VRD-ST2CD331J	J	AA	330 ohms,1/6W
R644,645	VRD-ST2CD683J	J	AA	68 kohms,1/6W
R650,651	VRD-ST2CD331J	J	AA	330 ohms,1/6W

OTHER CIRCUITRY PARTS

CN2	9FF33625010201	J		Plug,2Pin
CN4	9FF33625010701	J		Plug,7Pin
CN205	9FF33426301610	J		Connector,Ass'y,6Pin
CN207	9FF33426201710	J		Connector,Ass'y,7Pin
CNH102	9FF33426201510	J		Connector,Ass'y,5Pin
CNH106	9FF33422621610	J		Connector,Ass'y,6Pin
CNH107	9FF33432221310	J		Connector,Ass'y,3Pin
CNH108	9FF33432141410	J		Connector,Ass'y,4Pin
CNH109	9FF33432301210	J		Connector,Ass'y,2Pin
CNH110	9FF33422201210	J		Connector,Ass'y,2Pin
CNS1	9FF33422271750	J		Connector,Ass'y,10Pin
CNS2	9FF33426301210	J		Connector,Ass'y,2Pin
CNS101	9FF33625010601	J		Plug,6Pin
CNS102	9FF33625010501	J		Plug,5Pin
CNS105	9FF33625010100	J		Plug,10Pin
CNS106	9FF33625010601	J		Plug,6Pin
CNS107	9FF33625010301	J		Plug,3Pin
CNS108	9FF33625010401	J	AB	Plug,4Pin
CNS109	9FF33625010201	J		Plug,2Pin
CNS110	9FF33650010201	J		Plug,2Pin
⚠ F1	9FF32305125220	J	AD	Fuse,T1,25A L 250V
⚠ F501	9FF32305200000	J		Fuse,T2A L 250V
J1	9FF26400790000	J		Jack,Headphones
J2	9FF26400790460	J		Jack,CD/Line Input
M501(300-10)	9FF90080790000	J		Motor with Pulley [Tape]
MIC1	9FF26400790004	J		Jack,Microphone
MIC2	9FF26400790004	J		Jack,Microphone
MIC101	9FF28700100022	J		Built-in Microphone
⚠ SO501	9FF25800125000	J	AG	Socket,AC Power Inlet
SP1,2	9FF30338120101	J		Full-Range
SP3,4	9FF30368052100	J		Surround
SW201	9FF29184120000	J	AF	Switch,Slide Type [Band Selector]
SW301	9FF29123090000	J		Switch,Slide Type [Beat Cancel]
SW302	9FF29162000001	J		Switch,Push Type [Record/Playback]
SW401	9FF29142000002	J		Switch,Push Type [Surround Mode Select]
SW402	9FF29122000000	J		Switch,Push Type [Surround ON/OFF]
SW403	9FF29123120000	J		Switch,Slide Type [Dubbing Speed/Built-in Microphone/FM Mode]
SW404	9FF29143120000	J		Switch,Slide Type [Function Selector]
SW501(300-11)	9FF640101149	J		Switch,Leaf Type [Tape 2 Main]
SW502(300-12)	9FF640101149	J		Switch,Leaf Type [Tape 1 Main]
SW503(300-13)	9FF640101149	J		Switch,Leaf Type [Tape 2 Play]
SW504(300-14)	9FF64030204	J		Switch,Slide Type [Tape 2 Direction]
⚠ SW505	9FF29112001000	J	AF	Switch,Slide Type [Voltage Selector]

CABINET PARTS

201	9FF90000790000	J		Front Cabinet Ass'y
201-1	————		—	Front Cabinet (Not Replacement Item)
201-2	9FF45400790010	J		Speaker Net,Left
201-3	9FF45400790020	J		Speaker Net,Right
202	9FF13910790000	J		Paper,Spread-Light
203	9FF60200790000	J		Lens,Dial
204	9FF60210790000	J		Lens,Display
205	9FF18300790000	J		Plate,Hologram

NO.	PART CODE	★	PRICE RANK	DESCRIPTION
206	9FF90060790000	J		Surround Speaker Cover Ass'y, Left
206- 1	————		—	Cover,Surround Speaker,Left (Not Replacement Item)
206- 2	9FF45410790010	J		Speaker Net,Left
207	9FF90070790000	J		Surround Speaker Cover Ass'y, Right
207- 1	————		—	Cover,Surround Speaker,Right (Not Replacement Item)
207- 2	9FF45410790020	J		Speaker Net,Right
208	9FF90010790000	J		Control Panel Ass'y
208- 1	————		—	Panel,Control (Not Replacement Item)
208- 2	9FF80610790010	J		Badge,SHARP
210	9FF80600790010	J		Badge,Auto Reverse
211	9FF80420790010	J		Knob,Mic Volume
212	9FF60610790010	J		Panel,Display
213	9FF80430790010	J		Knob,Volume
215	9FF90020790000	J		Volume Knob Cover Ass'y
215- 1	————		—	Cover,Volume Knob (Not Replacement Item)
215- 2	9FF60710790010	J		Ring,Volume Knob
216	9FF62640790010	J		Holder,Spectrum Analyzer
217	9FF62630790010	J		Holder,LED
218	9FF80200790010	J		Knob,Graphic Equalizer
219	9FF62620790010	J		Holder,Graphic Equalizer Knob
220	9FF13890125010	J	AC	Cushion,Microphone
221	9FF80210790010	J		Knob,Dubbing Speed
222	9FF47300790000	J		Holder,Bar Antenna
223	9FF80210790010	J		Knob,Function Selector
224	9FF80220790010	J		Knob,Band Selector
225	9FF80410790010	J		Knob,Fine Tuning
226	9FF80112790010	J		Button,Surround
227	9FF14000790010	J		Shield Paper,Graphic Equalizer Holder
228	9FF62660790010	J		Plate,Record Switch Holder
229	9FF62650790010	J		Holder,Record Switch Plate
230	9FF15100790010	J		Heat Sink
231	9FF45720790020	J		Gear,PVC
232	9FF45710790010	J		Gear,Tuning Knob
233	9FF80400790010	J		Knob,Tuning
234	9FF62700790010	J		Dial Pointer
244	9FF62610790010	J		Holder,Tuning Knob
245	9FF90050790000	J		Battery Door Ass'y
245- 1	————		—	Door,Battery (Not Replacement Item)
245- 2	9FF1371502015	J	AC	Sponge,Battery Door
247	9FF63000790010	J		Handle
248	9FF90040790000	J		Cassette Door Ass'y [Tape2]
248- 1	————		—	Door,Cassette Holder [Tape2] (Not Replacement Item)
248- 2	9FF60300790020	J		Lens,Cassette Door [Tape2]
249	9FF90030790000	J		Cassette Door Ass'y [Tape1]
249- 1	————		—	Door,Cassette Holder [Tape1] (Not Replacement Item)
249- 2	9FF60300790010	J		Lens,Cassette Door [Tape1]
252	9FF54040790010	J		Spring,Cassette Door
253	9FF62600790010	J		Cassette Holder
254	9FF45700790010	J		Gear,Damper
255	9FF60010790000	J		Top Cabinet
256	9FF80100790010	J		Button,Record [Tape1]
257	9FF80101790010	J		Button,Play [Tape1]
258	9FF80102790010	J		Button,Rewind [Tape1]
259	9FF80103790010	J		Button,Fast Forward [Tape1]
260	9FF80104790010	J		Button,Stop/Eject [Tape1]
261	9FF80105790010	J		Button,Pause [Tape1]
262	9FF80106790010	J		Button,Reverse Mode [Tape2]
263	9FF80107790010	J		Button,Play [Tape2]
264	9FF80108790010	J		Button,Rewind [Tape2]
265	9FF80109790010	J		Button,Fast Forward [Tape2]
266	9FF80110790010	J		Button,Stop/Eject [Tape2]
267	9FF80111790010	J		Button,Direction [Tape2]
268	9FF46104229000	J		Shaft,Cassette Button
269	9FF15600790010	J		Plate,Cassette Button Shaft
270	9FF54030790010	J		Plate,Record Button
271	9FF70800125010	J	AC	Spacer,Power Transformer
272	9FF60910790010	J		Holder,Power Transformer
273	9FF60720125010	J	AB	Cover,AC Power Socket
274	9FF60720790010	J		Cover,Voltage Selector
275	9FF15620125010	J	AB	Plate,Power PWB Mounting
276	9FF62000790010	J		Rear Cabinet
277	9FF30200125000	J	AK	FM/SW Rod Antenna

NO.	PARTS CODE	★	PRICE RANK	DESCRIPTION
278	9FF54050790010	J		Spring,Rod Antenna
279	9FF54020790010	J		Spring,Battery,+/-
280	9FF54010790010	J		Spring,Battery,-
281	9FF54000790010	J		Spring,Battery,+
⚠282	9FF47301000000	J	AC	Fuse Holder
283	9FF16300035141	J	AA	Lead Wire with Lug
284	9FF16323095032	J		Lug
285	9FF20300790021	J		Label,Specifications [For Jordan/Saudi Arabia/ Egypt]
285	9FF20300790031	J		Label,Specifications [For Middle and Near East/ Syria/U.A.E/Middle South America/Russia]
285	9FF20300790011	J		Label,Specifications [For Thailand]
286	9FF20320120020	J		Label,Russian Mark [Russia Only]
287	9FF20320120060	J	AB	Label,Company [Syria/U.A.E/Russia Only]
288	9FF2909010001	J	AF	Ferrite Bar
289	9FF14000790020	J		Paper,Shielding
290	9FF14000790030	J		Paper,Shielding
291	9FF18000790010	J		Paper,PVC
292	9FF47310790010	J		Holder,Tuning Gear
293	9FF54060790010	J		Spring,Antenna
294	9FF20320120030	J	AB	Label,Made in China [Egypt Only]
300	9FF22500790000	J		Tape Mechanism Ass'y
300- 1	9FF192104309	J	AB	Pinch Roller Arm Ass'y
300- 2	9FF195904301	J		Pinch Roller Arm Ass'y,Left
300- 3	9FF195904302	J		Pinch Roller Arm Ass'y,Right
300- 4	9FF26310790148	J		Head,Record/Playback
300- 5	9FF2630212905	J	AF	Head,Erase
300- 6	9FF26300790144	J		Head,Playback
300- 7	9FF19210703	J		FF/REW Belt
300- 8	9FF182112173	J		Main Belt,Tape1 [Record]
300- 9	9FF182112142	J		Main Belt,Tape2 [Auto Reverse]
300-10(M501)	9FF90080790000	J		Motor with Pulley [Tape]
300-11(SW501)	9FF640101149	J		Switch,Leaf Type [Tape 2 Main]
300-12(SW502)	9FF640101149	J		Switch,Leaf Type [Tape1 Main]
300-13(SW503)	9FF640101149	J		Switch,Leaf Type [Tape 2 Play]
300-14(SW504)	9FF64030204	J		Switch,Slide Type [Tape 2 Direction]
601	9FF12920030014	J	AB	Screw,ø2×3mm
602	9FF13026050112	J	AB	Screw,ø2.6×5mm
603	9FF13030080012	J		Screw,ø3×8mm
604	9FF13120060011	J		Screw,ø2×6mm
605	9FF13120060012	J		Screw,ø2×6mm
606	9FF13130080017	J	AB	Screw,ø3×8mm
607	9FF13130080027	J	AB	Screw,ø3×8mm
608	9FF13130100017	J	AB	Screw,ø3×10mm
609	9FF13130200027	J		Screw,ø3×20mm
610	9FF13130080117	J		Screw,ø3×8mm
611	9FF13126100141	J		Screw,ø2.6×10mm
612	9FF15716015030	J	AB	Fiber Washer,ø15×ø3×1.6mm
613	9FF13130200037	J	AB	Screw,ø3×20mm
614	9FF1803006005	J		Washer,ø3×ø6×0.5mm

ACCESSORIES/PACKING PARTS

	9FF13500790010	J		Packing Add.,Left
	9FF13500790020	J		Packing Add.,Right
	9FF19427095401	J	AB	Polyethylene Bag,AC Power Supply Cord
	9FF19488045401	J		Polyethylene Bag,Unit
	9FF20100790011	J		Operation Manual [Except for Thailand/Russia]
	9FF20100790012	J		Operation Manual [Except for Thailand/Russia]
	9FF20100790020	J		Operation Manual [For Thailand]
	9FF20100790030	J		Operation Manual [For Russia]
	9FF20120120011	J		Customer Caution [Russia Only]
	9FF20120790010	J		Caution Card [Russia Only]
	9FF20310790010	J		Label,Bar Code [For Thailand]
	9FF20310790030	J		Label,Bar Code [For Middle South America/ Russia]
	9FF20320120010	J	AB	Label,Company [Syria/U.A.E/Russia Only]
	9FF20320780010	J		Label,Feature
	9FF20330120010	J		Label,Russian Mark [Russia Only]

WQ-790W

	NO.	PART CODE	★	PRICE RANK	DESCRIPTION
		9FF20600790010	J		Packing Case
⚠		9FF24801600292	J	AL	AC Power Supply Cord [For Saudi Arabia]
⚠		9FF24801830210	J	AK	AC Power Supply Cord [Except for Saudi Arabia]
⚠		9FF26802125120	J		Adaptor,AC Plug [For Middle South America]
⚠		9FF26802125210	J		Adaptor,AC Plug [For Saudi Arabia]

P.W.B. ASSEMBLY (Not Replacement Item)

PWB-A		9FF23700790000	J	—	Main
PWB-B1,2		9FF23710790000	J	—	Volume/Graphic Equalizer (Combined Ass'y)
PWB-C		9FF23790790000	J	—	Power

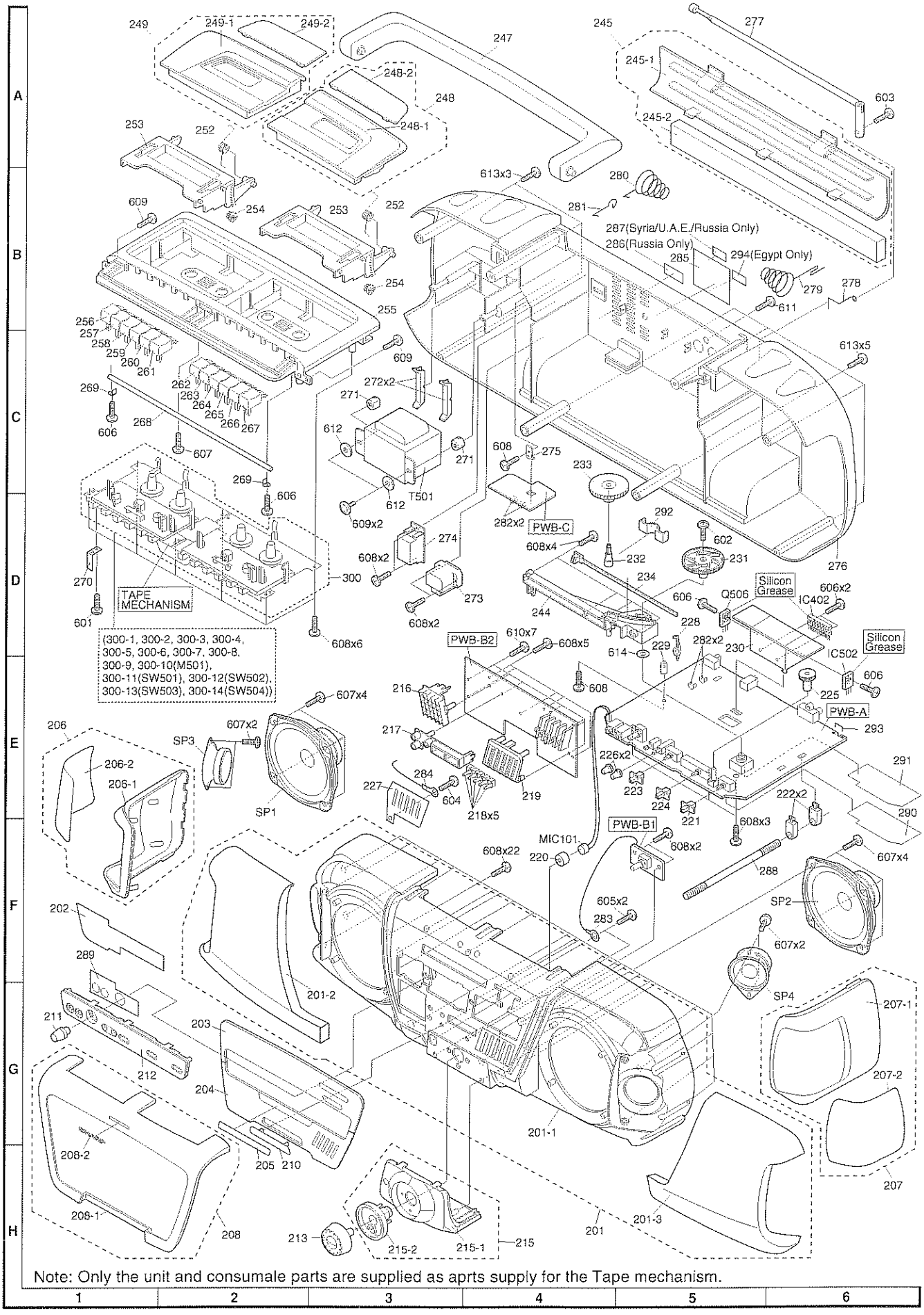

Note: Only the unit and consumale parts are supplied as aprts supply for the Tape mechanism.

Figure 6 CABINET EXPLODED VIEW

WQ-790W

SHARP

COPYRIGHT © 1998 BY SHARP COPORATION

ALL RIGHTS RESERVED.

No part of this publication may be reproduced, stored in a retrieval system, or transmitted in any from or by any means, electronic, mechanical, photocopying, recording, or otherwise, without prior written permission of the publisher.

SHARP CORPORATION
Communication Systems Group
Quality & Reliability Control Center
Higashihiroshima, Hiroshima 739-0192, Japan
Printed in Japan

A9807-1270NS•HA•H

EX • RUS • STL