HYUNDAI

DeluxScan S450/S560

Multiscanning Color Monitor

Technical Service Manual

http://monitor.hei.co.kr

CONTENTS

Safety Precaution ---------- 1
X-Ray Radiation Precaution ---------- 2
General Information ---------- 3
Control Description ---------- 4
Video Input Signal ---------- 6
Video Input Terminal ---------- 8
Connecting with External Equipment ---------- 9
Operational Description ---------- 10
Trouble Shooting ---------- 12
Adjustment Method ---------- 14
Specification ---------- 18
Critical Parts Specification ---------- 19
Block Diagram ---------- 30
Replacement Parts List ---------- 31
Schematic Diagram ---------- 49
Wave Form ---------- 50
PCB Layout ---------- 55
Exploded View ---------- 57

Safety Precaution

WARNING

Service should not be attempted by anyone unfamiliar with the necessary precautions on this monitor. The followings are the necessary precautions to be observed before servicing.

1. Always discharge the high voltage to the CRT conductive coating before handling the CRT. The picture tube is highly evacuated and if broken, glass fragments will be violently exploded. Use shatter proof goggles and keep picture tube away from the bare body while handling.
2. When replacing a chassis in the cabinet, always be certain that all the protective devices are put back in place, such as nonmetallic control knobs, insulating covers, shields, isolation resistor capacitor network etc.
3. Before returning the monitor to the customer, always perform an AC leakage current check on the exposed metallic parts of the cabinet, such as signal connectors, terminals, screw heads, metal overlays, control shafts etc, to be sure the monitor is safe to operate without danger of electrical shock. Plug the AC line cord directly into a AC outlet (do not use a line isolation trasformer during this check.). Use an AC voltmeter having 1500 ohm per volt or more sensitivity in the following manner : Connect ground(water pipe, conduit, etc.) and the exposed metallic parts, one at a time. Measure the AC Voltage across the combination of 1500 ohm resistor and 0.15μF capacitor. Reverse the AC plug at the AC outlet and repeat AC voltage measurements for each exposed metallic part. The Voltage must not exceed 0.3 volts RMS. This corresponds to 0.2 milliamp AC. Any value exceeded this limit constitutes a potential shock hazard and must be corrected immediately.

AC VOLTMETER

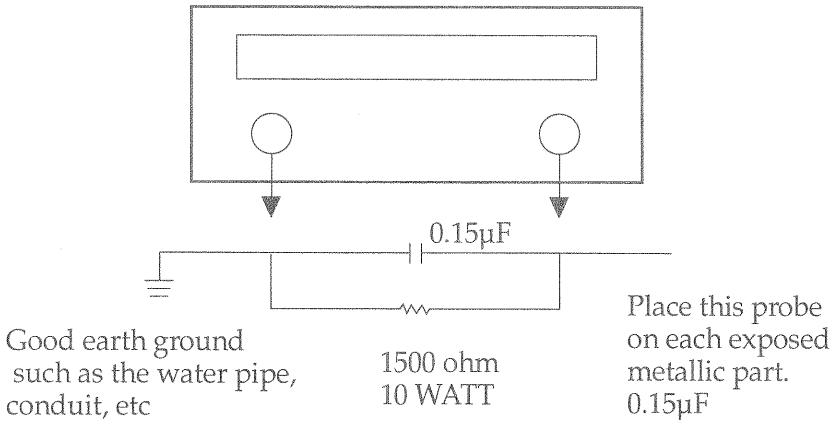

INSTRUCTIONS TO USER

This equipment generates and uses radio frequency energy and if not installed and used properly, that is, in strict accordance with the manufacturer's instruction, may cause interference to radio and television. It has been tested and found to comply with the limits for the specifications in Subpart J of Part 15 FCC Rules, which are designed to provide reasonable protection against such interference in a residential installation. However, there is no guarantee that interference will not occur in a particular installation.

If this equipment does cause interference to radio or television reception, which can be determined by turning the equipment off and on, the user is encouraged to try to correct the interference by one or more of the following measures.

- reorient the receiving antenna
- relocate the computer with respect to the receiver
- plug the computer into a different outlet so that computer and receiver are on different branch circuits.

X-Ray Radiation Precaution

1. Excessive high voltage can produce potentially hazardous X-RAY RADIATION. To avoid such hazards, the high voltage must be under the specified limit. The nominal value of the high voltage of this monitor is 25.0KV±0.5KV at zero beam current(minimun brightness) under a 120V AC power source. The high voltage must not(under any circumstances) exceed 27.5KV. Each time a monitor requires servicing, the high voltage should be checked.
   It is recommended the high voltage be recorded as a part of the service record. It is important to use an accurate and reliable high voltage meter.

2. This monitor is equipped with a protection circuit which prevents the monitor from producing excessively high voltage. Each time the monitor is serviced, the protection circuit must be checked to determine that the circuit is properly functioning.

3. The only source of X-RAY RADIATION in this monitor is the picture-tube.
   For continued X-RAY RADIATION protection, the replacement tube must be exactly the same type tube as specified in the parts list.

4. Some parts in this monitor have special safety-related characteristics for X-RAY RADIATION protection.
   For continued safety, parts replacement should be undertaken only after referring to the product safety notice.

PRODUCT SAFETY NOTICE

Many electrical and mechanical parts in this monitor have special safety-related characteristics. These characteristics are often not evident from visual inspection.
Replacement parts which have these special safety characteristics are identified in this manual; electrical components having such features identified by "⚠" in the replacement parts list and schematic diagram.
For continued protection, replacement parts must be identical to those used in the original circuit. The use of substitute replacement parts which dose not have the same safety characteristics as the factory recommended replacement parts shown in this service manual, may create shock, fire, X-RAY RADIATION or other hazards.

General Information

1. Description

- S450 : 14" (13.2" viewable) color display monitor is operated in R, G, B, drive mode input.
- S560 : 15" (13.7" viewable) color display monitor is operated in R, G, B, drive mode input.

2. Operating instructions

2-1. External instructions

2-2. Front

Power Switch, Brightness, Contrast, H-Position, H-Size, V-Position, V-Size, Pin, RECALL, Function LED, Power(DPMS)LED, Trapezoid, Parallelogram, Pin balance, Zoom, H-Moire, V-Moire, Self Test.

2-3. Rear

Input connection (AC, SIGNAL CABLE)

2-4. Service Instruction(internal controls)

High-Voltage, B+, Focus, Screen, H-Center, R.G.B cut-off, R.B Gain, Corner Pin.

3. Electrical Characteristics

3-1. 100-240 Volt 60Hz/50Hz for use all over the world.

This power supply is a 70 Watt multi output SMPS for monitor.

3-2. Video

Input : 0 to 0.700Vp-p analog signal(at 75 ohm terminated)
Polarity : Positive

3-3. Horizontal Drive

Level : TTL High : 2.4V min
Low : 0.4V max
Polarity : Negative or Positive
Frequency : • S450 : 30KHz~50KHz
• S560 : 30KHz~57KHz

3-4. Vertical Drive

Level : TTL High : 2.4V min
Low : 0.4V max
Polarity : Negative or Positive
Frequency : 50Hz~130Hz

Control Description

Front View

■ **S450**

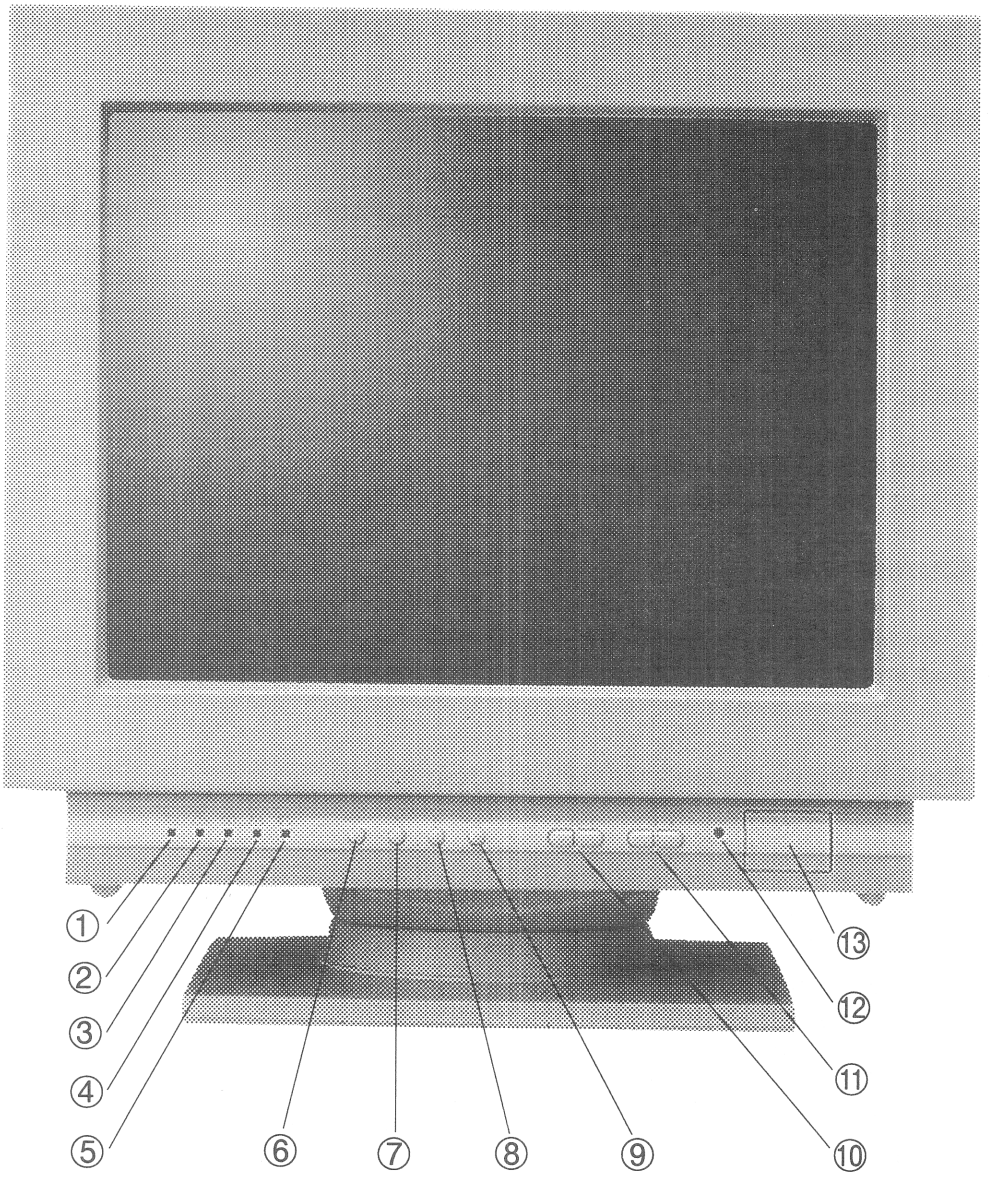

① H-Size LED
② H-Position LED
③ V-Size LED
④ V-Position LED
⑤ Pincushion LED
①+② Trapezoid LED
②+③ Parallelogram LED
③+④ Horizontal Pin Balance LED
④+⑤ H,V Size Up/Down(Zoom) LED
②+④ V Moire LED
③+⑤ H Moire LED

⑥ Select
⑦ Adjust -
⑧ Adjust +
⑥+⑦ H,V Moire
⑥+⑧ Self Test
⑨ Recall
⑩ Brightness - +
⑪ Contrast - +
⑫ Power (DPMS) LED
⑬ Power Switch

■ S560

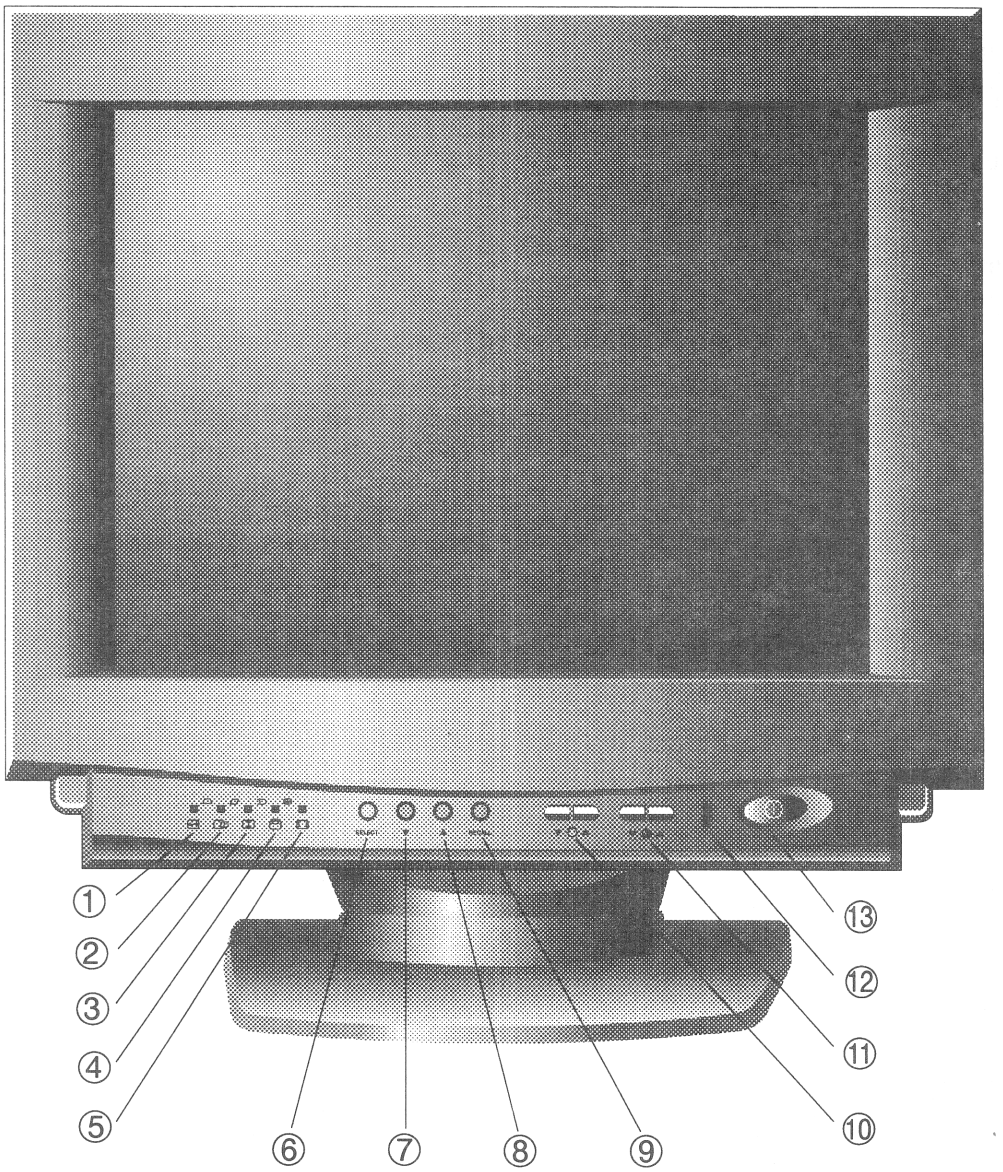

① H-Size LED
② H-Position LED
③ V-Size LED
④ V-Position LED
⑤ Pincushion LED
①+② Trapezoid LED
②+③ Parallelogram LED
③+④ Horizontal Pin Balance LED
④+⑤ H,V Size Up/Down(Zoom) LED
②+④ V Moire LED
③+⑤ H Moire LED

⑥ Select
⑦ Adjust -
⑧ Adjust +
⑥+⑦ H,V Moire
⑥+⑧ Self Test
⑨ Recall
⑩ Brightness - +
⑪ Contrast - +
⑫ Power (DPMS) LED
⑬ Power Switch

Video Input Signal

Recommended signals are shown below.

- **Video Signal**
  Video Level : 0 to 700mV
  Polarty : Positive
  Video Input : RGB separated
  Analog level
  Sync input : H-Sync ; TTL level
  V-Sync ; TTL level

- **Waveform**
  Video input(R, G, B)

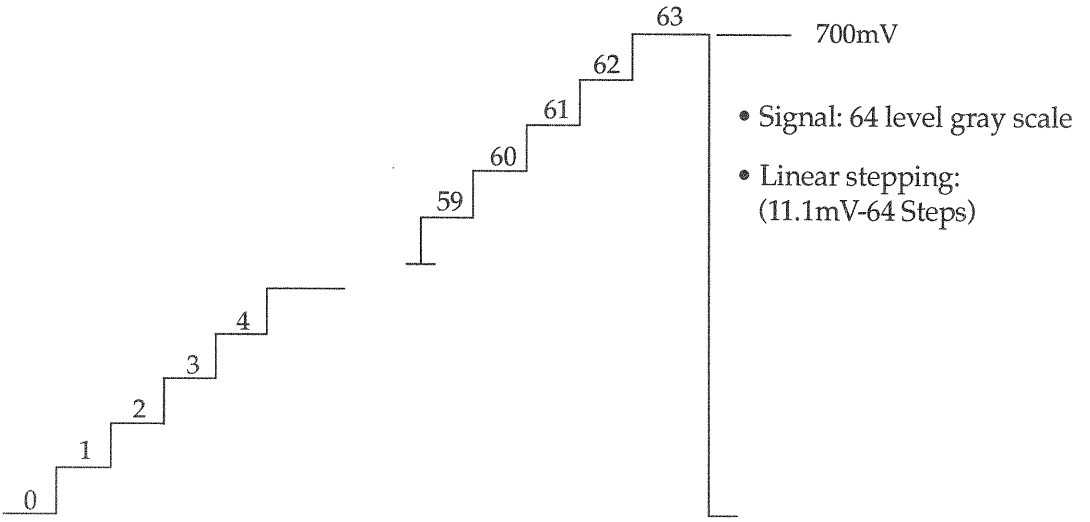

- **H-Sync**

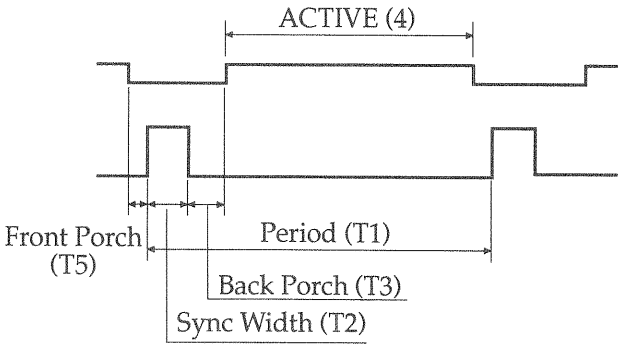

- **V-Sync**

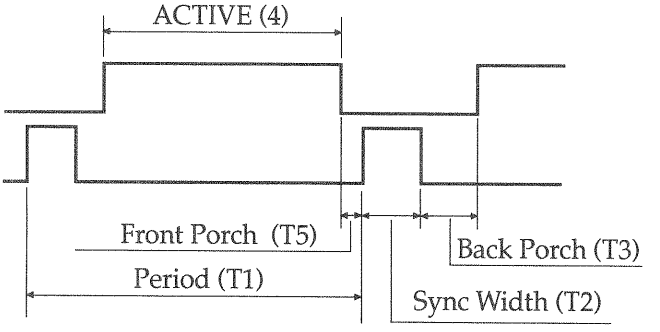

Timing table

Model	S450	*	*	*		*		*	*	
	S560	*	*	*	*	*	*	*	*	*
Horizontal	Dot	720	640	640	640	800	800	800	1024	1024
Frequency	kHz	31.469	31.469	37.500	43.269	46.875	53.674	37.879	48.363	56.476
Period(T1)	μs	31.778	31.778	26.667	23.111	21.333	18.631	26.400	20.677	17.707
Sync Width(T2)	μs	3.813	3.813	2.032	1.556	1.616	1.138	3.200	2.092	1.813
Back Porch(T3)	μs	1.907	1.907	3.810	2.222	3.232	2.702	2.200	2.462	1.920
Active(T4)	μs	25.422	25.422	20.317	17.778	16.162	14.222	20.000	15.754	13.653
Front Porch(T5)	μs	0.636	0.636	0.508	1.556	0.323	0.569	1.000	0.369	0.320
Vertical	Line	400	480	480	480	600	600	600	768	768
Frequency	Hz	70.080	59.940	75.000	85.008	75.000	85.061	60.317	60.004	70.069
Period(T1)	ms	14.269	16.683	13.333	11.764	13.333	11.756	16.579	16.666	14.272
Sync Width(T2)	ms	0.064	0.064	0.080	0.069	0.064	0.056	0.106	0.124	0.106
Back Porch(T3)	ms	1.080	1.048	0.427	0.578	0.448	0.503	0.607	0.600	0.513
Active(T4)	ms	12.711	15.253	12.800	11.093	12.800	11.179	15.840	15.880	13.599
Front Porch(T5)	ms	0.413	0.318	0.027	0.023	0.021	0.019	0.026	0.062	0.053
Interlaced	Y/N	N	N	N	N	N	N	N	N	N
Sync Polar	H	-	-	-	-	+	+	+	-	-
	V	+	-	-	-	+	+	+	-	-

The monitor is compatible with additional modes within the specified frequency ranges provided that they are different at least for one of the following :

Horizontal Freq.: ±1kHz
Vertical Freq.: ±1Hz

Note: *Even if the monitor detects the input timing as a factory preset mode, the size and position may not be able to be set as desired. Check the input timings are under the specifications and adjust the image as you want.*

For better quality of display image, use the timing and polarity shown in the table above. Please see your video card user's guide to ensure compatibility.

Video Input Terminal

A 15 Pin D-sub connector is used as the input signal connector.
Pin and input signals are shown in the table below.

Pin Description

SIGNAL / PIN NO.	SEPERATE SYNC/ DDC 1/2B
1	RED
2	GREEN
3	BLUE
4	N.C
5	GROUND
6	RED GROUND
7	GREEN GROUND
8	BLUE GROUND
9	N.C
10	LOGIC GROUND
11	GROUND
12	SDA
13	H-SYNC(TTL)
14	V-SYNC(VCLK)
15	SCL

D-Sub miniature connector

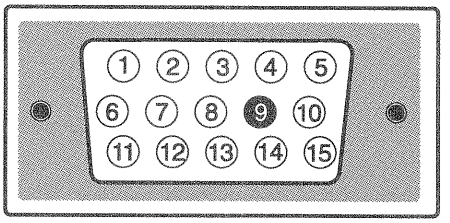

Connecting with External Equipment

Cautions

Be sure to turn off the power of your computer before connecting the monitor.

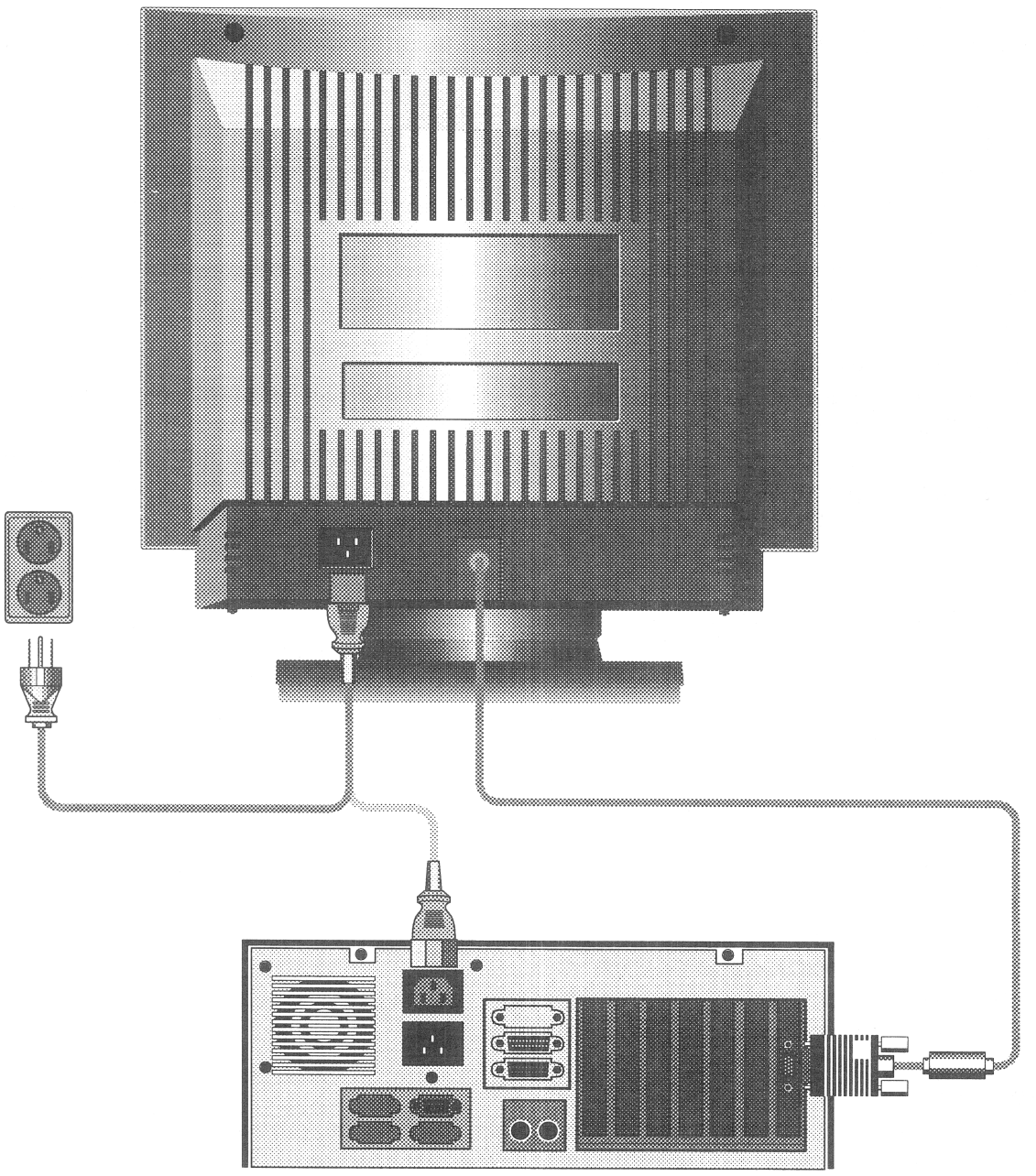

Operational Description

1. SMPS Operation

AC input voltage is rectified by D101, 102, 103 and 104 and filtered at C106. The rectified voltage makes U101 (3842) IC start through R114, Q102, D107 and then T102 & Q103 start the switching operation, and the voltage rectified by D110 enables U101 to keep working through exciting static voltage (DC17V) to Vcc (#7) of U101. The secondary side of T102 outputs voltages of 55V, 72V, 35V, 6.3V, 12V. U102 (7805) outputs 5V from 12V above and this 5V is used as Vcc for MCU (U501), EEPROM (U502) ICs. The synchronizations of monitor frequency and line frequency are done by FBT Sync Wire.

2. MCU & related circuits Operation

MCU recognizes H-sync and V-sync and controls each data. The output from MCU controls H-S, V-P, Size-Pin, TRP, Parallelogram, H-Pin Balance, H-V Zoom, Contrast and Bright. The output of MCU supports CS1, CS2, LED Control.
Stand-by, Suspend, mode indicator LED and Auto Alignment. EEPROM stores Preset Mode Timing and DAC Data of each mode. and one master/slave I^2C Interface.

3. Horizontal Circuit Operation

U301 defines the values of horizontal drive waveform duty and oscillation frequency. The waveform from pin #8 of U301 goes to the gate of Q301, and it makes T301 and Q302 be driven. Q302 also makes T601 (FBT) work. AFC circuit works by the output voltage of pin# 3 of T601. H-Position is controlled by adjusting the input voltage to the pin #15 of U301. X-Ray protect works if the Zener Diode input voltage to pin #2 of U301 is greater than 6.3V. The screen brightness is automatically adjusted by R602.

4. Flyback Transformer input voltage control circuit

This boost up circuit switches Q303 by the square waveform from pin#6 of U301. Horizontal circuit is stabilized by 12V through R317 which also excite U302. Q311 controls the base current of Q312. Also this circuit overlaps E/W waveform to the collector waveform of Q312 and controls H-size by the current control of L302.

5. H-Size and Pincushion circuit

E/W waveform came out from pin #11 of U301. Through Q311, this circuit controls the base current of Q312. Also, this circuit overlaps E/W waveform to the collector waveform of Q312, and controls H-Size by the current control of L302.

6. Size Correction Compensation circuit

High/Low level of CS1 and CS2 came out from MCU makes Q307, 308 on or off, and makes it work in each frequency by controlling the gates of Q309 and 310.

7. Vertical Circuit

Oscillation waveform came out from pin #12, #13 of U301 goes into pin #1, #2 of U201 and goes out to pin #6 of U201, and it makes DY operate. U201 is driven by input of +12V & 35V. and V-Size, V-Position is controlled by the I^2C Data of U501

8. Video Circuit

The input signals from pin #4, #6, #9 of U401 are amplified and go out to pin #16, #20, #25. G-Gain is fixed by R420. R-B gains are adjusted by U501 of I^2C Data
The amplified signal goes into pin #8, #9, #11 of U402 and comes out to pin #1, #3, #5 of U402 and excites cathode of CRT. Bias adjustment is handled by superposing 105V from FBT to Cathode and is adjusted by VR401, 402, 403.

9. CRT Operation

10V output of SMPS is to be dropped down for about 3.7V by R125, R126 registor, and excites 6.3V to Heater. G2 Voltage is adjusted to (S450 : 580V, S560 : 610V) by FBT, and G1 Voltage is adjusted by Bright Level.

10. DPMS Operation

Suspend & Off Mode
Suspend operation is done by turning off Q106 and Q106 cuts off the active voltage of horizontal, vertical, and video circuits. Also off mode operation is done by turning off Q104 and Q104 cuts off the heater voltage

Trouble Shooting

1. Introduction

This trouble shooting guide is arranged by fault conditions. Following each fault condition is a check for a signal on condition to be answered YES or NO.
For NO answer proceed to the right and continue until the fault is located.
For a YES answer continue in the left column to the next numbered check.
Again followed this procedure until the fault is located.

2. Trouble shooting procedure

When Troubleshooting this monitor, some precaution should be observed.
Never connect primary ground and secondary ground together including use with an isolation transformer.
Measure high voltage with respect to chassing ground only, and with a high impedance probe of 1000 mega-ohm or higher and rated for 30KV DC or higher.
Measure Q302 collector pulse with a high quality 100:1 probe rated for 1500 volts or higher.

3. Troubleshooting procedure

Symptom	Check(YES)	Action(NO)
a) Image is scrolling.	1) Check for Vsync at pin 40 of U501	Check 15 pin D-sub connector, cable
	2) Check for positive going Vsync at pin 32 of U501.	Check U301, U501
	3) Will V-sync is locked with input signal? (pin 24 of U301)	Check C302
	4) Check V-ramp at pin 12, 13 of U301.	Replace U301.
b) Image is unstable.	1) Check for Hsync at pin 39 of U501	Check 15 pin D-sub connector, cable
	2) Check for positive going Hsync at pin 33 of U501.	Replace U501
	3) Will H-oscillator is locked with input signal? (pin 29 of U301)	Check C305
	4) Check H-out at pin 8 of U301	Replace U301
	5) Check for flyback pulse at pin 1 of U301.	Check R323
	6) Check monostable pulse at pin 29 of U301.	Replace U301.

Symptom	Check(YES)	Action(NO)
c) Screen is black but high voltage is present.	1) Check for G2, pin4 of CRT. About 580 volts?	Check G2 wire, CRT socket. (• S450 : 580V, • S560 : 610V)
	2) Check for heater voltage at pin 7 of CRT. (about 6.3V)	Check D114, C125, Q104, R125, R126, CRT socket.
	3) Can screen be lit with brightness control at MAX?	Check C605, R608, D601, VR601, CRT socket.
	4) Check for video at pin 2, 4, 6 of U401.	Check 7 pin P501 connector, cable, D407-D412
	5) Check for positive pulse for clamp at pin 19 of U401.	Check U501
	6) Check if contrast controls video level at pin 1, 3, 5 of U401.	Check U501.
	7) Check for video at pin #8, #9, #11 of U402.	Check U402.
	8) Check for video at pin #1, #3, #5 of U402.	Check U402.
	9) Check if R, G, B cut-off control the video DC level of CRT.	Check VR401, VR402, VR403.
	10) Check CRT.	
d) Screen is black but with no high voltage.	1) Check for 55V at cathode of D111, D116.	Check 55V with no load. If no 55V, Check SMPS. If 55V OK, Check Q306, Q304, Q305, Q303, D308, FR302, Pin 6 of U301
	2) Check for 12V at collector of Q106.	Check 12V with no load. If no 12V, Check Q106, FR201, D115 of SMPS. If 12V OK, Check U301, U201, Q306.
	3) Check for 5V output of U102.	Check U102, U501, U502, D107
	4) Check collector pulse of Q302.	Check Q302, D326, D305, D306, D307.
	5) Check feedback voltage at pin 2 of U301. About 6.3V?	Check ZD301, R322, R321, D303, C317, C316.
	6) Check T601(FBT), Yoke.	

Adjustment Method

1. Caution

Extremely high voltage are present in the area around the FBT(T601) and the anode high voltage lead. Do not touch Q101 or its heatsink as high voltage is present on these components.

2. Equipment Required

Digital Voltmeter
Frequency Counter : about 40 Hz to 100 KHz
Color Analyzer
Video Signal Generator
High Voltmeter : up to 30 KV
Alignment Templete : Attachment 1
Factory Adjustment JIG : Attachment 2

3. Before Adjustment

Verify that the video output level is 0.7 Vpp at 75 ohm termination and the video timings are same as standard timing given in specification. Place the AC power switch to the ON position.
Allow the monitor to stabilize thermally for 15 minutes at least before any adjustment about the image parameters. The CRT tube and components of system require time of stabillizing.

4. Adjustment Procedure

4-1 Voltage setting

1) B^+ Setting
- Video Signal : Cross Hatch pattern in VGA mode
- Measuring Point : J107 (use Digital Voltmeter)
- Adjustment : VR101, main board
- Limits : 14.3V ± 0.2V

2) High Voltage Setting
- Video Signal : Black pattern in 31kHz (720 × 400)
- Set the Brightness controls to the cut-off position
- Measuring Point : P303 (use Digital Voltmeter)
- Adjustment : VR301, main board
- Limits : • S450 : 84V ± 0.5V at I_B=0 μA.
  • S560 : 71V ± 0.5V at I_B=0 μA.

3) Screen Voltage Setting
- Video Signal : Black pattern in VGA mode
- Measuring Point : G2 on the CRT board (use High Voltmeter)
- Adjustment : Screen VR, lower VR of FBT
- Limits : • S450 : 580 V ± 10 V
  • S560 : 610 V ± 10 V

4-2 Geometry

- Adhere templete closely to the CRT surface
- Connect the Factory Adjustment JIG to P501 on the main board
- Adjustment : +/- key

1) Horizontal Raster Center Setting
- Video Signal : • S450 : Cross Hatch pattern in 48kHz(1024×768)
  • S560 : Cross Hatch pattern in 56kHz(1024×768)
- Adjusting Point : SW301, main board
- Adjust Raster located in center of Bezel

2) Horizontal Size Setting
- Video Signal : • S450 : Cross Hatch pattern in 48kHz(1024×768)
  • S560 : Cross Hatch pattern in 56kHz(1024×768)
- Set LED ■ □ □ □ □ and make the V-right/left line of display equivalent to the templete

3) Horizontal Position Setting
- Video Signal : • S450 : Cross Hatch pattern in 48kHz(1024×768)
  • S560 : Cross Hatch pattern in 56kHz(1024×768)
- Set LED □ ■ □ □ □ and make the V-center line of display equivalent to the templete

4) Vertical Size Setting
- Video Signal : • S450 : Cross Hatch pattern in 48kHz(1024×768)
  • S560 : Cross Hatch pattern in 56kHz(1024×768)
- Set LED □ □ ■ □ □ and make the H-upper/lower side line of display equivalent to the templete

5) Vertical Position Setting
- Video Signal : • S450 : Cross Hatch pattern in 48kHz(1024×768)
  • S560 : Cross Hatch pattern in 56kHz(1024×768)
- Set LED □ □ □ ■ □ and make the H-center line of display equivalent to the templete

6) Pincushion Setting
- Video Signal : Cross Hatch pattern from 54kHz to 31kHz
- Set LED □ □ □ □ ■ and make straight line to the V-right/left line of display

7) Trapezoid Setting
- Video Signal : • S450 : Cross Hatch pattern in 48kHz(1024×768)
  • S560 : Cross Hatch pattern in 56kHz(1024×768)
- Set LED ■ ■ □ □ □ using select key

8) Parallelogram Setting
- Video Signal : • S450 : Cross Hatch pattern in 48kHz(1024×768)
  • S560 : Cross Hatch pattern in 56kHz(1024×768)
- Set LED □ ■ ■ □ □ and make straight line to the V-right/left line of display

9) Horizontal Pin Balance Setting
- Video Signal : • S450 : Cross Hatch pattern in 48kHz(1024×768)
  • S560 : Cross Hatch pattern in 56kHz(1024×768)
- Set LED □ □ ■ ■ □ and make the V-right/left line of display equivalent to the templete.

10) Corner Pin Setting
- Video Signal : • S450 : Cross Hatch pattern in 48kHz(1024×768)
  • S560 : Cross Hatch pattern in 56kHz(1024×768)
- Set LED ■ □ □ □ ■ and make straight line to the V-right/left line of display

** After adjusting, remove the Factory Adjustment JIG*

4-3 White Balance

- Adhere Color Analyzer sensor closely to CRT center
- Video Input Level : Light white (700mV)
- Connect the Factory Adjustment JIG to P501 on the main board
- Set User Contrast / Bright Key Max.

1) Cut-Off Setting

- Video Signal : • S450 : Black pattern in 48kHz (1024×768) @60Hz
  • S560 : Black pattern in 56kHz (1024×768) @70Hz
- Adjust Sub Bright volume to 2~5 cd/㎡
- Adjust the white balance using the R.G.B cut-off controls
  R cut-off control : VR401
  G cut-off control : VR402
  B cut-off control : VR403
- Limits : x=0.281±0.02, y=0.311±0.02, using VR401, VR402, VR403 in CRT Board.
- Check the Brightness which value 2±0.5cd/㎡

2) Drive Setting

- Adjust the white balance using the R.B drive of MCU controls (connect factory Jig to P501)
- Video Signal : • S450 : 20% Box Pattern (700mV) in 48kHz(1024×768) @60Hz
  • S560 : 20% Box Pattern (700mV) in 56kHz(1024×768) @70Hz

2-1) R,B Drive Setting

R-Drive : Set LED ■ ■ □ □ ■ and Select key, Up/Down key using the R Drive controls
B-Drive : Set LED ■ ■ □ ■ □ and Select key, Up/Down key using the B Drive controls
- Limits : x=0.281±0.02, y=0.311±0.02, Using of Mcu controls
- Check the Brightness which Value is 180±3cd/㎡ or not.

2-2) Max Brightness Setting (After R,B Drive setting)

- Video Signal : • S450 : Light white full pattern (700mV) in 48kHz(1024×768)
  • S560 : Light white full pattern (700mV) in 56kHz(1024×768)
- Set LED □ □ ■ ■ ■ and Select key, Up/Down key using the Max brightness controls
- Check the Brightness which vaule is 115±5cd/㎡

4-4 Focus

- Video Signal : • S450 : " Full H " pattern in 48kHz
  • S560 : " Full H " pattern in 56kHz
- Set max contrast using Contrast key with back raster cut off.
- Adjust the Focus VR on the top of the FBT so that the image of whole screen looks clear

5. X-Ray Protection Test

- In signal input condition, short both end of R321(main board) by using the JIG
- At this moment, check out whether Raster disappears
- Remove the JIG
- After the power switch of the set off and on, check out proper working

6. Burn-In

- Disconnect video cable in normal condition.
- In no signal condition, power on

Attachment 1

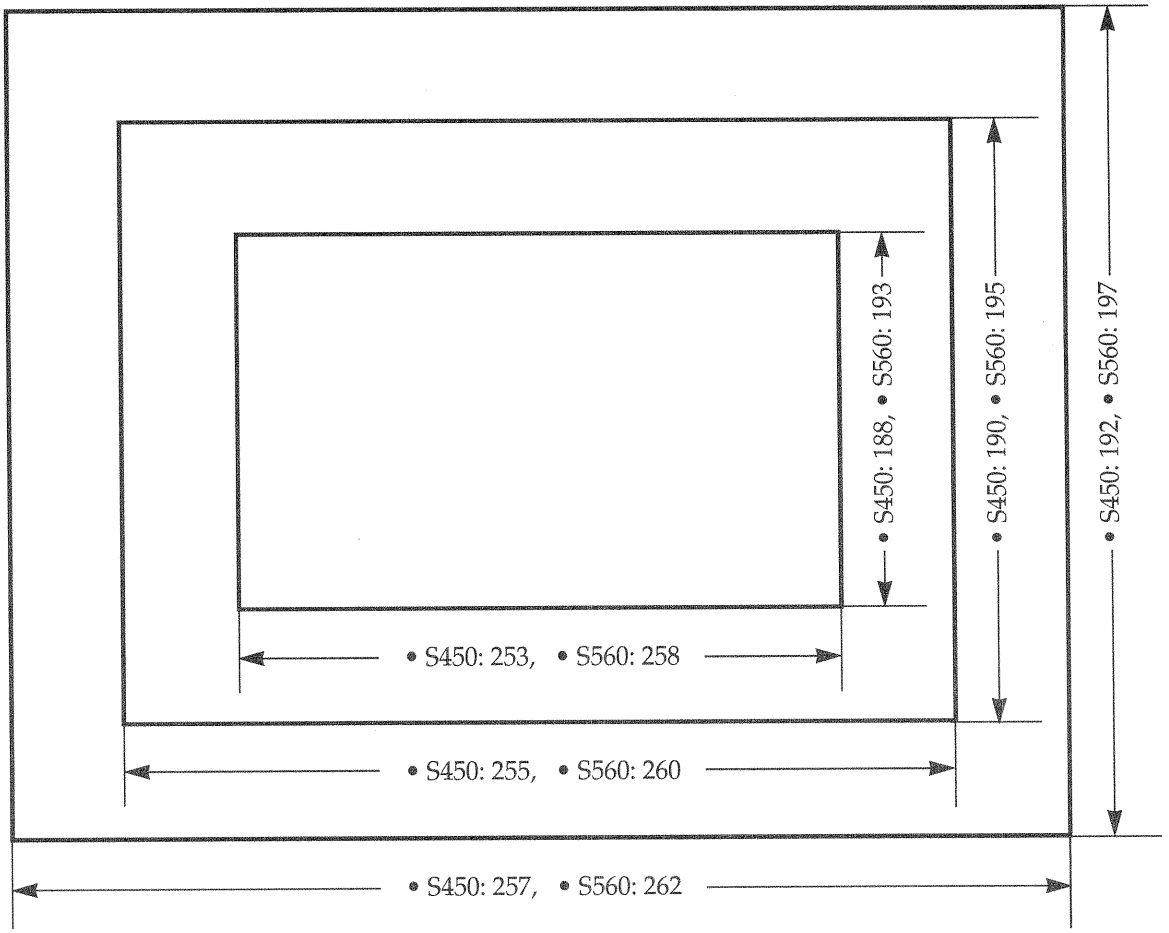

Attachment 2

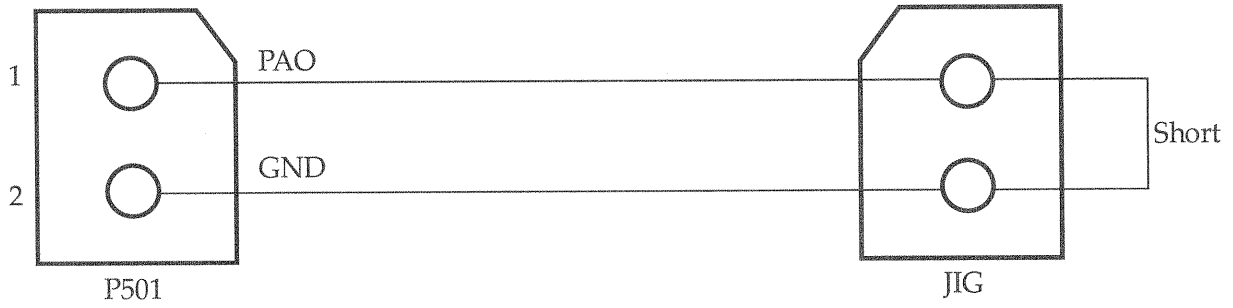

* *Pin 1, 2 Short : Factory Mode Saving Function*

Specification

CRT	SIZE	• S450 : 14"(13.2" viewable) • S560 : 15"(13.7" viewable)
	Dot Pitch	0.28 mm
	Type	Non-glare, VLMF type
Input	Signal	R.G.B Analog
	Connector	15 pin D-Type
SYNC	H-F	• S450 : 30 kHz~50 kHz(Automatic) • S560 : 30 kHz~57 kHz(Automatic)
	V-F	50 Hz~130 Hz(Automatic)
Display	Area(H×V) Color	• S450 : 255×190 mm (Max. Over Scan) • S560 : 260×195 mm (Max. Over Scan) Infinite
Resolution		• S450 : Max. 1024×768 (48kHz/60Hz) • S560 : Max. 1024×768 (56kHz/70Hz)
User Controls		H/V Size, H/V Position, Pincushion, Trapezoid, Parallelogram, H-Pin balance, H.V Size up/down(zoom), Self Test, H.V Moire, Recall, Brightness, Contrast, Power Switch,
Power Management		As per VESA Standard, Lower than EPA's recommendation
VESA DDC 1/2B		Basic
Compatibility		VESA, 8514/A, XGA, EVGA
Power Source		100-240 VAC(Universal Power) 1.3A 70W(Typical)
Safety & Regulation	MPR II	Basic
	EMC	FCC Class B, CE
	Safety	UL, CSA, TÜV-GS, ISO-9241-3, DHHS, NEMKO, DEMKO, FIMKO, SEMKO
Temperature	Operating	5 to 35 degree celsius
	Storage	-30 to 60 degree celsius
Humidity	Operating	35% to 80% (Non-condensing)
	Storage	30% to 85%
Weight		• Uint : 10.5Kg (S450), 12.5Kg (S560) • Carton : 12.5Kg (S450), 14.1Kg (S560)
Dimension(W×H×D mm)		• S450 : 352×360.2×372.5 mm • S560 : 365×374×384 mm

▶ *Specification is subject to change without notice for performance improvement.*

Critical Parts Specification

WT60P1

Digital Monitor Controller

FEATURES

- 8-bit 6502 compatible CPU, 4MHz operating frequency
- 16384 bytes EEPROM, 288 bytes SRAM
- 8MHz crystal oscillator
- Sync signal processor with H+V separation, frequency calculation, H/V polarity detection/control
- DDC interface supports VESA DDC 1/2B standard
- Master/slave I^2C interface

PIN ASSIGNMENT

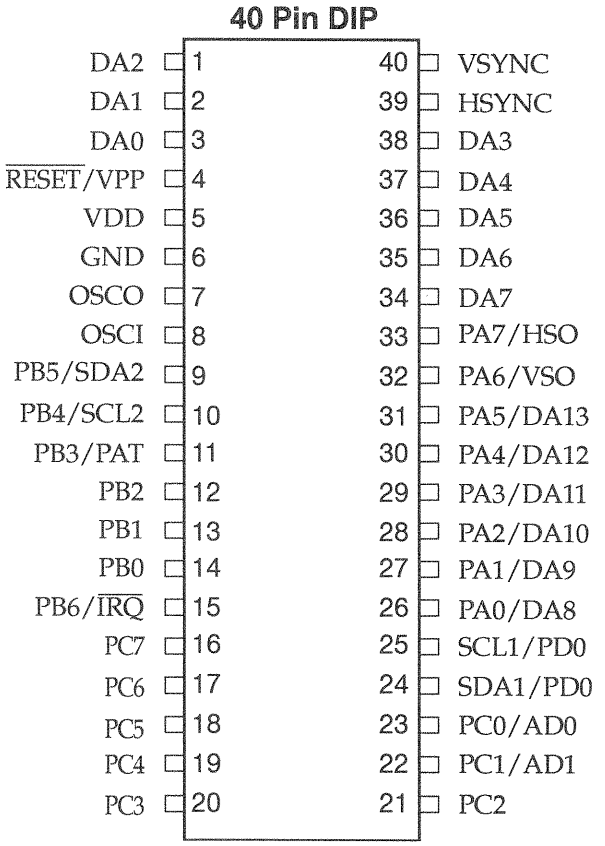

- I^2C is a trademark of Philips Corporation.
- DDC is a trademark of Video Electronics Standard Association (VESA).

PIN DESCRIPTION

Pin No.		Pin Name	I/O	Descriptions
40	42			
1	1	DA2	O	D/A converter 2. Open-drain output.
2	2	DA1	O	D/A converter 1. Open-drain output.
3	3	DA0	O	D/A converter 0.
4	4	/RESET/Vpp	I	Reset or Vpp. Active low reset.
5	5	VDD		Power supply (+5V).
6	7	GND		Ground (0V).
7	8	OSCO	O	Oscillator Output. Connects a 8MHz crystal.
8	9	OSCI	I	Oscillator Input. Connects a 8MHz crystal.
9	10	PB5/SDA2	I/O	I/O Port B5 or I^2C data pin.
10	11	PB4/SCL2	I/O	I/O Port B4 or I^2C clock pin.
11	12	PB3/PAT	I/O	I/O Port B3 or self-test pattern output.
12	13	PB2	I/O	I/O Port B2. Same as PB0.
13	14	PB1	I/O	I/O Port B1. Same as PB0.
14	15	PB0	I/O	I/O Port B0.
15	16	PB6/IRQ	I/O	I/O Port B6 or Interrupt Request.
16	17	PC7	I/O	I/O Port C7.
17	18	PC6	I/O	I/O Port C6. Same as PC7.
18	19	PC5	I/O	I/O Port C5. Same as PC7.
19	20	PC4	I/O	I/O Port C4. Same as PC7.
20	21	PC3	I/O	I/O Port C3. Same as PC7.
21	22	PC2	I/O	I/O Port C2. Same as PC7.
22	23	PC1/AD1	I/O	I/O Port C1 or A/D converter input 0.
23	24	PC0/AD0	I/O	I/O Port C0 or A/D converter input 1.
24	25	SDA1/PD1	I/O	DDC serial data or I/O Port D1.
25	26	SCL1/PD0	I/O	DDC serial clock or I/O Port D0.
26	27	PA0/DA8	I/O	I/O Port A0 or D/A converter 8.
27	28	PA1/DA9	I/O	I/O Port A1 or D/A converter 9.
28	29	PA2/DA10	I/O	I/O Port A2 or D/A converter 10.
29	30	PA3/DA11	I/O	I/O Port A3 or D/A converter 11.
30	31	PA4/DA12	I/O	I/O Port A4 or D/A converter 12.
31	32	PA5/DA13	I/O	I/O Port A5 or D/A converter 13.
32	33	PA6/VSO	I/O	I/O Port A6/VSYNC OUT.
33	34	PA7/HSO	I/O	I/O Port A7/HSYNC OUT.
34	35	DA7	O	D/A converter 7. Open-drain output.
35	36	DA6	O	D/A converter 6. Open-drain output.
36	38	DA5	O	D/A converter 5. Open-drain output.
37	39	DA4	O	D/A converter 4. Open-drain output.
38	40	DA3	O	D/A converter 3. Open-drain output.
39	41	HSYNC	I	HSYNC input.
40	42	VSYNC	I	VSYNC input.

TDA4853

I²C-auto sync deflection controller for PC/TV monitors

FEATURES

Concept features

- Full horizontal plus vertical autosync capability; TV and VCR mode included
- Extended horizontal frequency range from 15 to 130kHz
- Comprehensive set of I²C-bus driven geometry adjustments and functions, including standby mode
- Very good vertical linearity
- Moire cancellation
- Start-up and switch-off sequence for safe operation of all power components
- X-ray protection
- Flexible switched mode B+ supply function block for feedback and feed forward converter
- Internally stabilized voltage reference
- DC controllable inputs for Extremely High Tension (EHT) compensation
- SDIP 32 package.

Synchronization

- Can handle all sync signals (horizontal, vertical, composite and sync-on-video)
- Output for video clamping (leading/trailing edge selectable by I²C-bus), vertical blanking and protection blanking
- Output for fast unlock status of horizontal synchronization and blanking on G1 of picture tube.

Horizontal section

- I²C-bus controllable wide range linear picture position, pin unbalance and parallelogram correction via horizontal phase
- Frequency locked loop for smooth catching of horizontal frequency
- Slimple frequency preset of f_{min} and f_{max} by external resistors
- Low jitter
- Soft start for horizontal and B+ control drive signals.

Vertical section

- I²C-bus controllable vertical picture size, picture position, linearity (S-correction) and linearity balance
- Output for I²C-bus controllable vertical sawtooth and parabola (for pin unbalance and parallelogram)
- Vertical picture size independent of frequency
- Differential current outputs for DC coupling to vertical booster.
- 50 to 160Hz vertical autosync range.

East-West (EW) section

- I²C-bus controllable output for horizontal pincushion, horizontal size, corner and trapezium correction
- Optional tracking of EW drive waveform with line frequency selectable by I²C-bus.

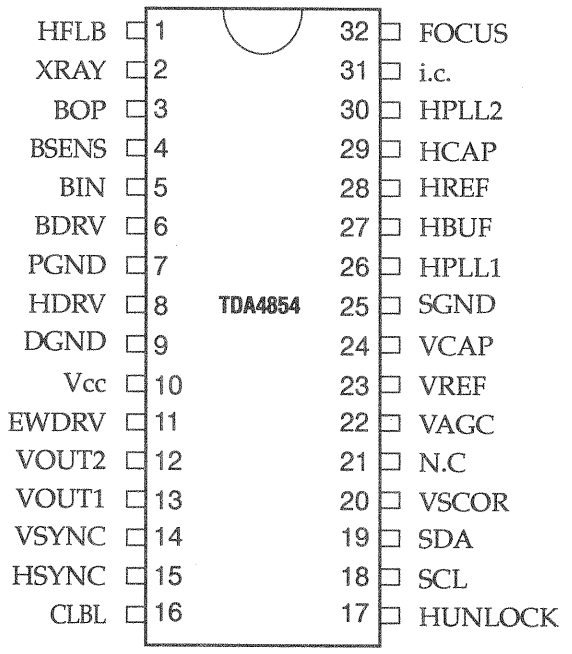

PINNING

SYMBOL		PIN	DESCRIPTION
TDA4853	TDA4854		
HFLB		1	Horizontal flyback input
XRAY		2	X-ray protection input
BOP		3	B+ control OTA output
BSENS		4	B+ control comparator input
BIN		5	B+ control OTA input
BDRV		6	B+ control driver output
PGND		7	Power ground
HDRV		8	Horizontal driver output
i.c.		9	Internal connected; note 1
VCC		10	Supply voltage
EWDRV		11	EW waveform output
VOUT2		12	Vertical output 2 (ascending sawtooth)
VOUT1		13	Vertical output 1 (descending sawtooth)
VSYNC		14	Vertical synchronization input
HSYNC		15	Horizontal/composite synchronization input
CLBL		16	Video clamping pulse/vertical blanking output
HUNLOCK		17	Horizontal synchronization unlock/protection/vertical blanking output
SCL		18	I^2C-bus clock input
SDA		19	I^2C-bus data input
ASCOR		20	Output for asymmetric EW corrections
VSMOD		21	Input for EHT compensation (via vertical size)
VAGC		22	External capacitor for vertical amplitude control
VREF		23	External resistor for vertical oscillator
VCAP		24	External capacitor for vertical oscillator
SGND		25	Signal ground
HPLL1		26	External filter for PLL1
HBUF		27	Buffered f/v voltage output
HREF		28	Reference current for horizontal oscillator
HCAP		29	External capacitor for horizontal oscillator
HPLL2		30	External filter for PLL2/soft start
HSMOD		31	Input for EHT compensation (via horizontal size)
i.c.	-	32	Internal connected; note 1
-	FOCUS	32	Output for horizontal and vertical focus

BLOCK DIAGRAM

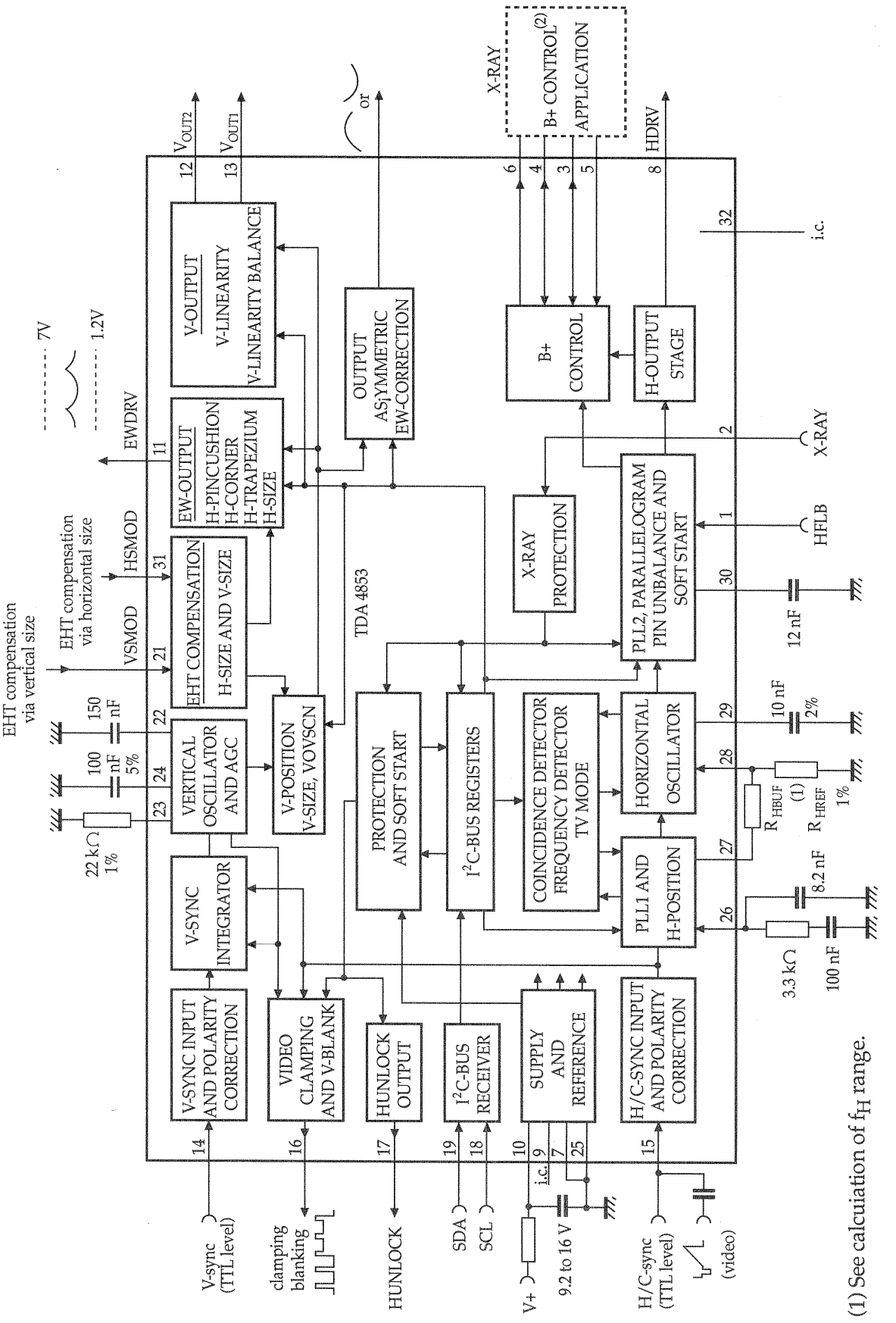

24LC04

4K 2.5V CMOS Serial EEPROMs

FEATURES

- Single supply with operation down to 2.5V
- Low power CMOS technology
  - 1 mA active current typical
  - 10μA standby current typical at 5.5V
  - 5 μA standby current typical at 3.0V
- Organized as two or fore blocks of 256 bytes (2×256×8) and (4×256×8)
- Two wire serial interface bus, I²C™
- Schmitt tigger, filtered inputs for noise suppression
- Output slope control to eliminate ground bounce
- 100kHz (2.5V) and 400kHz (5V) compatibility
- Self-timed write cycle (including auto-erase)
- Page-write buffer for up to 16 bytes
- 2 ms typical write cycle time for page-write
- Hardware write cycle time for page-write
- Can be operated as a serial ROM
- Factory programming (OTP) available
- ESD protection > 4,000V
- 1,000,000 ERASE/WRITE cycles (typical)
- Data retention > 40 years
- 8-pin DIP, 8-lead or 14-lead SOIC packages
- Available for extended temperature ranges
  - Commercial : 0℃ to +70℃
  - Industrial : -40℃ to +85℃

PIN CONFIGURATION

DIP Package

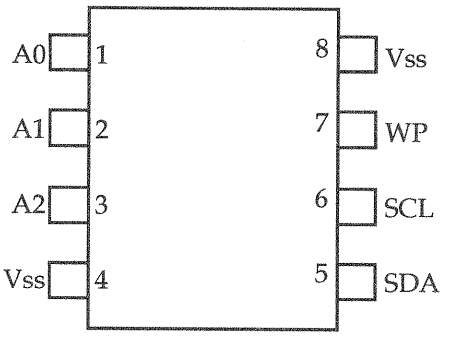

DESCRIPTION

The Microchip Technology Inc. 24LC04B/08B is a 4K-or 8K-bit Electrically Erasable PROM.
The device is organized as two or four blocks of 256×8 bit memory with a two wire serial interface. Low voltage design pemits operation down to 2.5 volts with standby and active currents of obly 5μA and 1mA respectively.
The 24LC04B/08B also has a page-write capability for up to 16 bytes of data. The 24LC04B/08B is available in the standard 8-pin DIP and both 8-lead and 14-lead surface mount SOIC packages.

BLOCK DIAGRAM

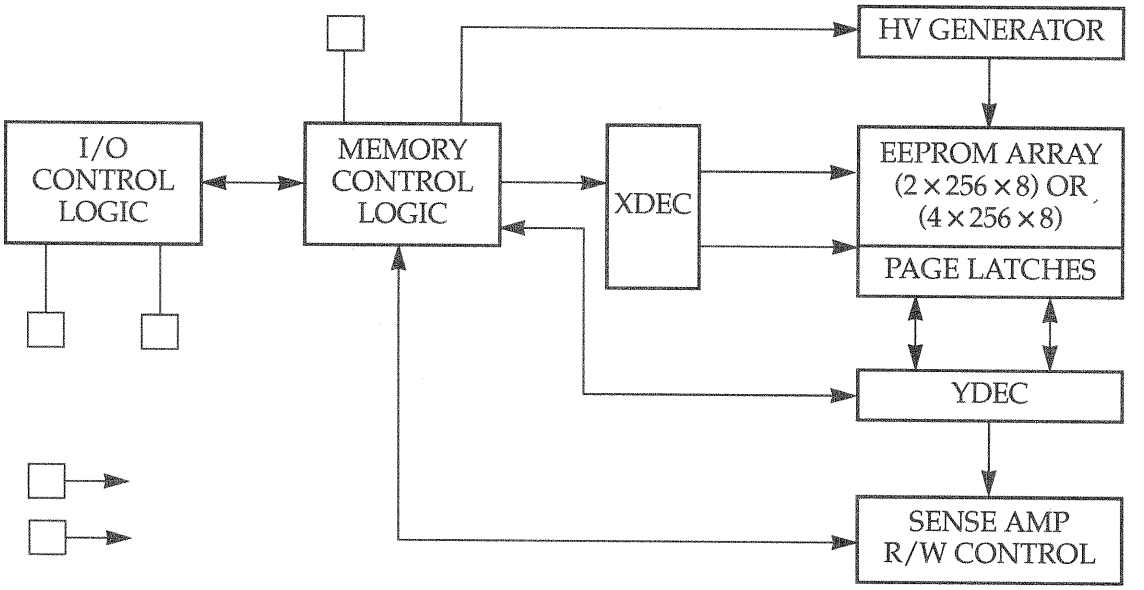

Regulator IC, ULM7805

CONNECTION TABLE	
Pin	TO-220
1	IN
2	Gnd
3	OUT
4	-

TO-220 Package

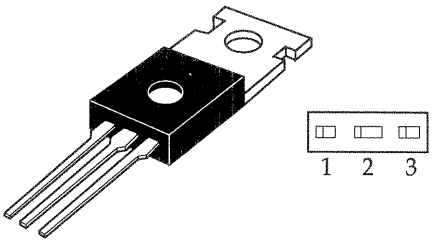

MC 13281 FYP

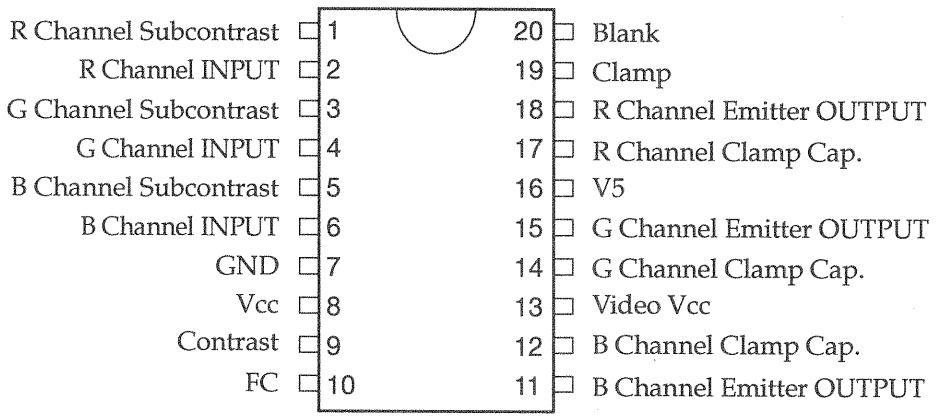

ITEM	Proviso	PIN #	Min	Typ	Max	UNIT
POWER SUPPLY VOLTAGE	-	8.13	7.6	8	8.4	Vdc
CONTRAST CONTROL	-	9	0	-	5	Vdc
SUB-CONTRAST CONTROL	-	1, 3, 5	0	-	5	Vdc
BLANKING INPUT THRESHOLD	-	20	-	1.25	-	V
CLAMPING INPUT THRESHOLD	-	19	-	3.75	-	V
VIDEO SIGNAL INPUT	at 75 Ω TERMINATION	2, 4, 6	-	0.7	1.0	Vpp
OUTPUT SIGNAL AMP.	V2, V4, V6=0.7Vpp V1, V3, V5, V9=5V	11, 15, 18	3.6	4	-	Vpp
EMITTER DC LEVEL	-	11, 15, 18	1.0	1.2	1.5	Vdc
VIDEO BANDWIDTH	-	-	-	100	-	MHz

KA3842

CURRENT MODE PWM CONTROLLER

- OPTIMIZED FOR OFF-LINE AND DC TO DC CONVERTERS
- LOW START-UP CURRENT (<1mA)
- AUTOMATIC FEED FORWARD COMPENSATION
- PULSE-BY-PULSE CURRENT LIMITING
- ENHANCED LOAD RESPONSE CHARACTERISTICS
- UNDER-VOLTAGE LOCKOUT WITH HYSTERESIS
- DOUBLE PULSE SUPPRESSION
- HIGH CURRENT TOTEM POLE OUTPUT
- INTERNALLY TRIMMED BANDGAP REFERENCE
- 500kHz OPERATION
- LOW Ro ERROR AMP

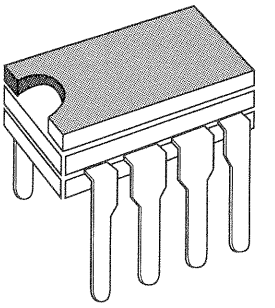

Minidip

PIN CONNECTIONS

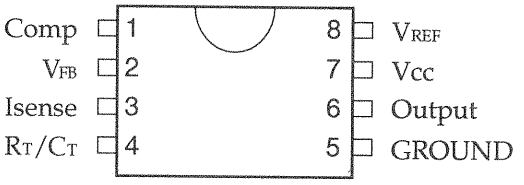

BLOCK DIAGRAM

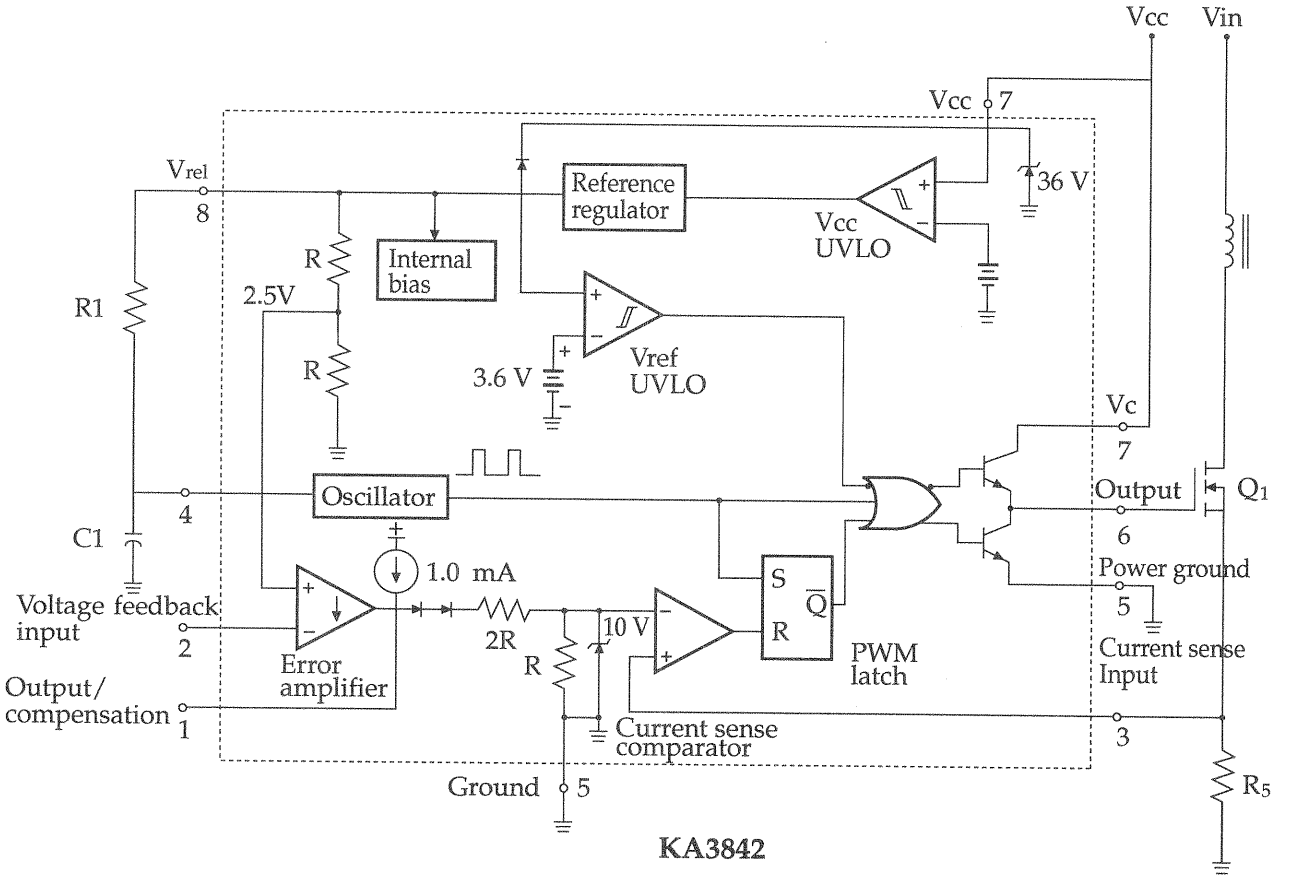

TDA4866

Full bridge current driven vertical deflection booster

PINNING

SYMBOL	PIN	DESCRIPTION
INA	1	input A
INB	2	input B
Vp	3	supply voltage
OUTB	4	output B
GND	5	ground
OUTA	6	output A
V_{FB}	7	flyback supply voltage
GUARD	8	guard output
FEEDB	9	feedback input

The cooling fin is connected to pin 5 (GND)

PIN CONFIGURATION

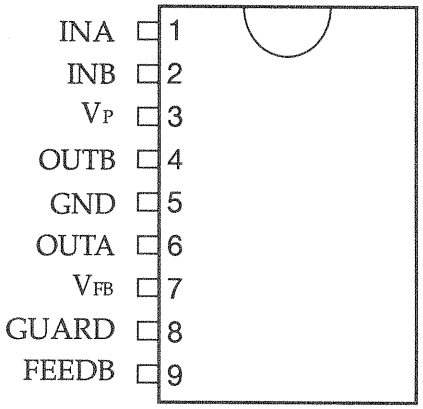

BLOCK DIAGRAM

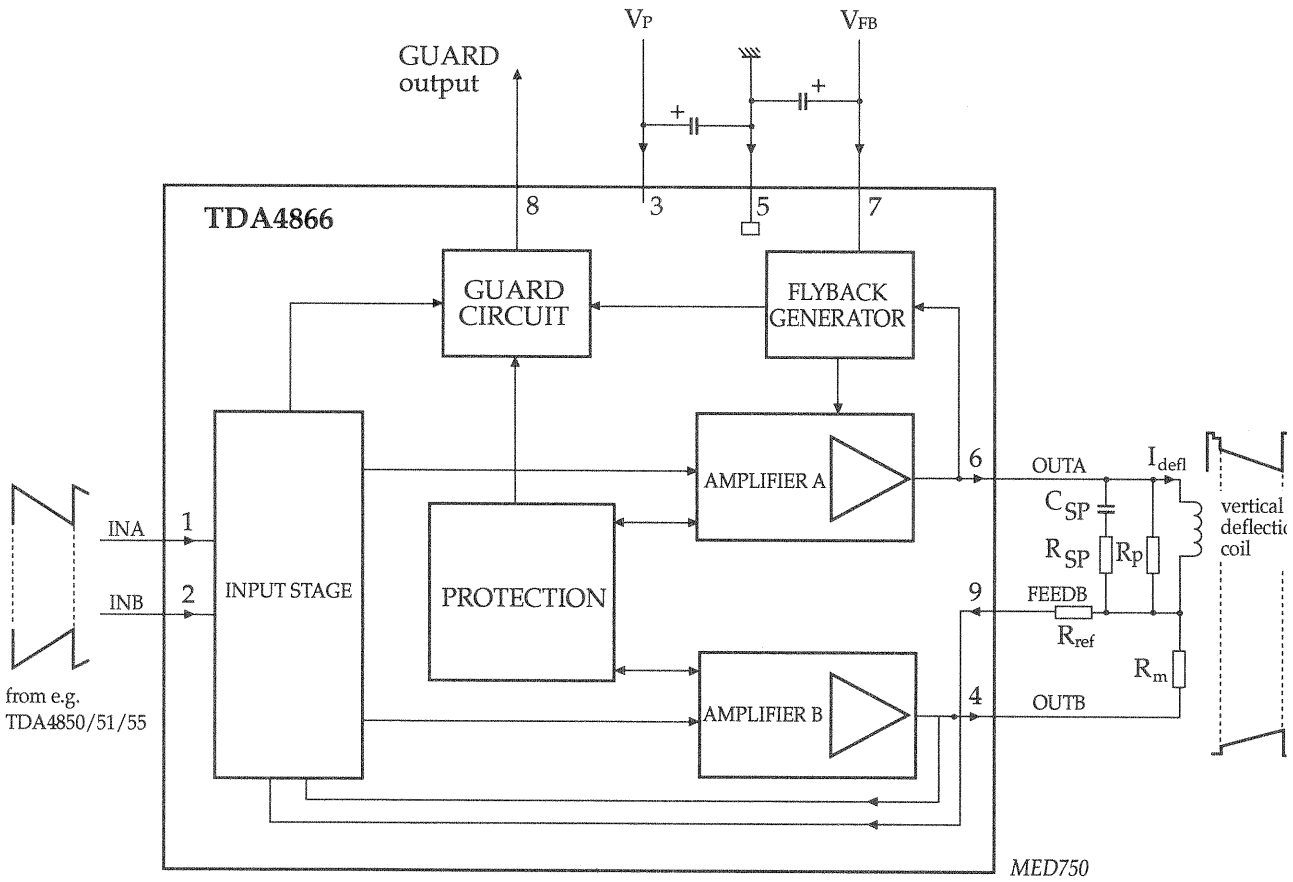

LM2409

Monolithic Triple 9.5 nS CRT Driver

SCHEMATIC and CONNECTION DIAGRAMS

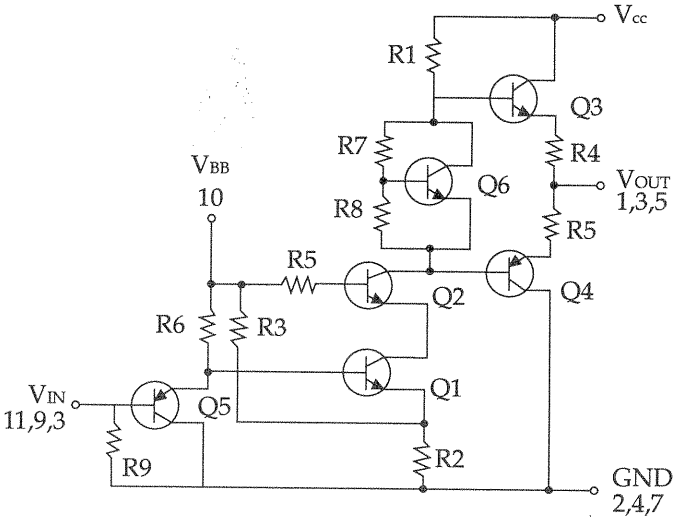

Simplified Schematic Diagram (One Channel)

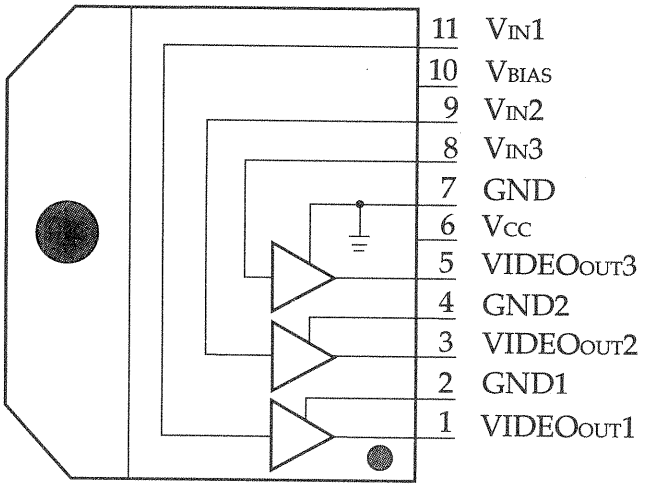

Top View

Absolute Maximum Ratings (Note 1 & 3)

Supply Voltage Vcc	+90V
Bias Voltage, VBB	+16V
Input Voltage, VIN	0V to 6V
Storage Temperature Range, TSTG	-65°C to +150°C
Lead Temperature (Soldering, <10 sec.)	300°C
ESD Tolerance, Machine Model	400V

Operating Ranges (Note 2)

Vcc	+60V to +85V
VBB	+8V to +15V
VIN	+0V to +5V
Vout	+15V to +75V
Case Temperature	-20°C to +115°C

Do not operate the part without a heat sink.

Electrical Characteristics

Unless otherwise noted: Vcc= +80V, VBB= +12V, VIN=+2.7VDC, CL=8pF, Output= 40 Vpp at 1MHz, Tc=50°C.

SYMBOL	PARAMETER	CONDITIONS	LM2409			UNITS
			Min	Typical	Max	
ICC	Supply Current	Per Channel, No Input Signal, No Output Load		8		mA
IBB	Bias Current	All three channels		12		mA
VOUT	DC Output Voltage	No AC Input Signal, Vin=1.2V	62	65	68	VDC
AV	DC Voltage Gain	No AC Input Signal	-12	-14	-16	
ΔAV	Gain Matching	Note 4, No AC Input Signal		1.0		dB
LE	Linearity Error	Notes 4, 5 No AC Input Signal		8		%
tR	Rise Time	Note 6, 10% to 90%		9		nS
tF	Fall Time	Note 6, 90% to 10%		11		nS
OS	Overshoot	Note 6		1		%

KA358

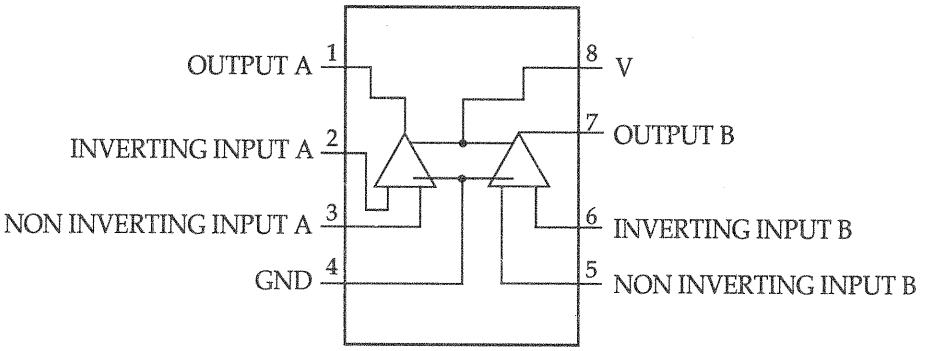

TRANSISTORS

Type No.	MAX. RATINGS			$V_{CE(SET)}$	Max					Package
	V_{CEO} (V)	I_C (mA)	P_C (mW)	(V)	I_C (mA)	I_B (mA)	1	2	3	
KTA200	-50	-500	625	-0.25	-100	-10	E	C	B	TO-92
KTA1273	-30	-2.0A	1W	-2.0	-1.5A	-3.0	E	C	B	TO-92L
KTA1275	-160	-1.0A	1W	-1.5	-500	-50	E	C	B	TO-92L
KTC4368	150	1.5A	20W	1.5	500	50.0	B	C	E	TO-220IS
KRC102M	50	100	400	-0.3	-100	-0.88	E	C	B	TO-92M
KTC200	50	500	625	0.25	100	10	E	C	B	TO-92
KTC3198	50	150	625	0.25	100	10	E	C	B	TO-92
2SC945	50	100	250	0.3	100	20	E	C	B	TO-92
MIPSA45	350	300	625	0.5	20	2.0	E	B	C	TO-92

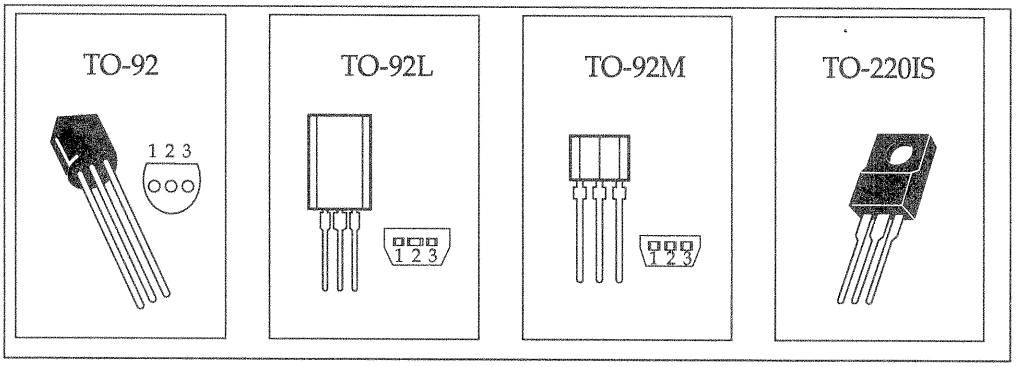

Block Diagram

S450/S560 BLOCK_DIAGRAM
CHASSIS NO : C-1507

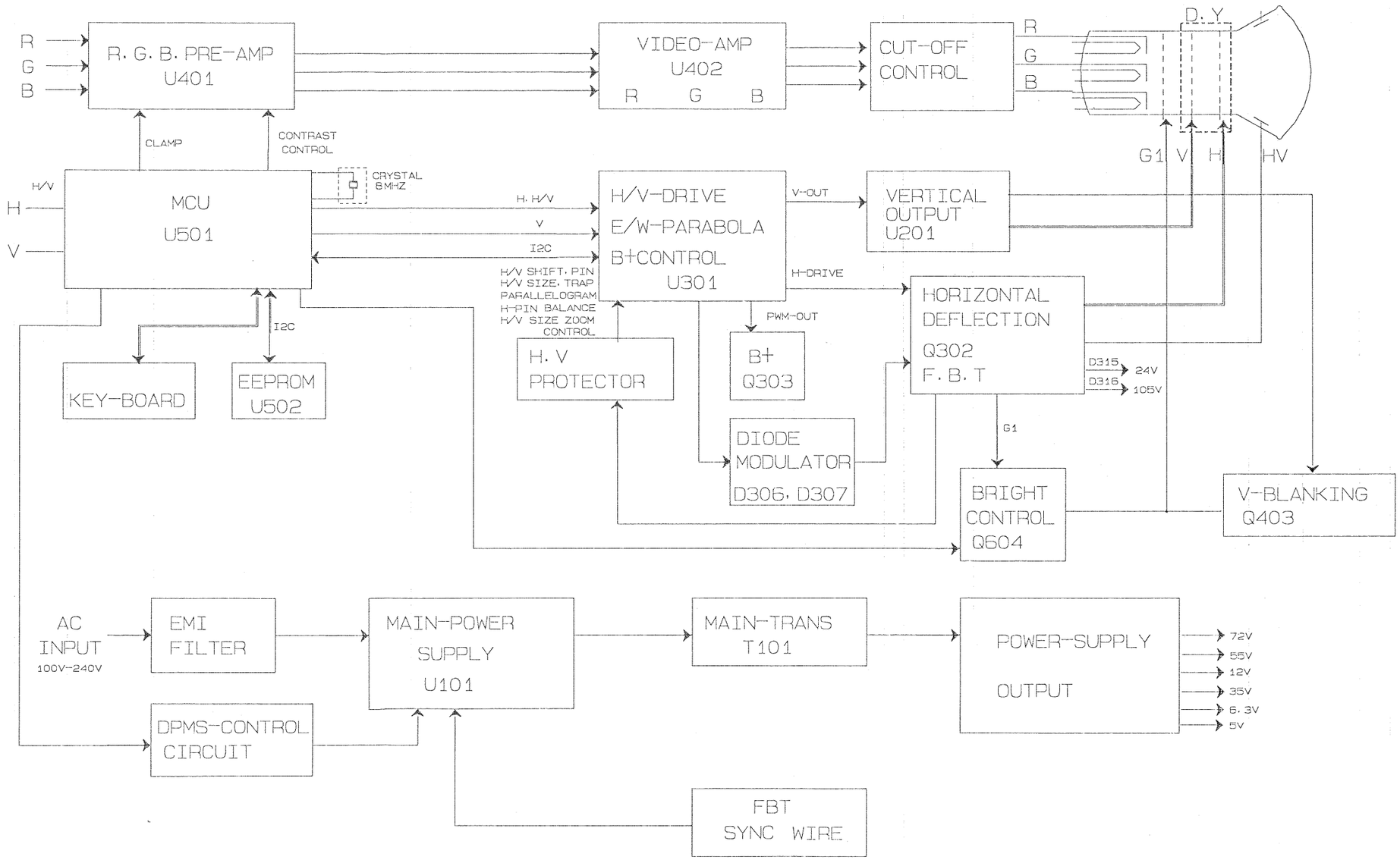

WARNING: THIS EQUIPMENT CONTAINS SAFETY CRITICAL COMPONENTS. ALL PARTS SHOWN IN THE ⚠ MARKS OF THE SCHEMATIC ARE SAFETY. REPLACE SAFETY CRITICAL COMPONENTS ONLY WITH MANUFACTURER'S RECOMMENDED PARTS LIST FOR EXACT REPLACEMENTS.

NOTE:
1. RESISTANCE IS SHOWN IN OHM M=1,000 M=1,000,000 RATED POWER OF RESISTOR NOT NOTED IN SCHEMATIC DIAGRAM IS 1/6W P-CARBON.
2. CAPACITANCE IS SHOWN PF AND NOTED CAPACITANCES IS SHOWN UF. UF=1,000,000PF RATED VOLTAGE OF CONDENSER NOT NOTED IN SCHEMATIC DIAGRAM IS 50V.
3. ANNOTATION AND SYMBOL PP: POLYPROPYLENE PT: POLYESTER
4. THIS SCHEMATIC DIAGRAM IS SUBJECTED TO CHANGE WITHOUT NOTICE FOR FURTHER IMPROVEMENT.

DWG. REV.	A	DESCRIPTION		DOC. NO.	DATE	APPROVAL
DWG. NO.		SIGNATURE		DATE	INSP	SHEET NO.
TITLE: S450 BLOCK DIAGRAM	DWN	D.Y.KIM	1998.11.19			1/1
	CHK	J.W.LEE	1998.11.19			
	APP	J.S.KANG	1998.11.19			

Replacement Parts List

PRODUCT SAFETY NOTICE : COMPONENTS MARKED WITH ⚠ HAVE SPECIAL CHARACTERISTICS IMPORTANT TO SAFETY.

ABBREVIATIONS :

RD R-CARBON
RS R-METAL OXIDE
RX R-CEMENT
RN R-METAL(±1%)

CK C-CERAMIC, HK
CE C-ELECTROLYTIC
CC C-CERAMIC, TEMP
CQ C-POLYESTER, C-POLYPROPYLENE
CF C-METAL POLYESTER C-METAL POLYPROPYLENE

NOTE : COMPONENTS OF THIS PARTS LIST CAN BE CHANGED FOR QUALITY IMPROVEMENT WITHOUT INFORMATION.

NUM.	LOCATION	PART NUMBER	DESCRIPTION	REMARK
1		B4204662200	KIT LAB&MAN,S560 HEA	
2		B4204505100C	LABEL,X-RAY WARNING	
3		B4204513261B	LABEL,B/CODE 48KHZ(DIC30)	
4		B4204700009F	W/CARD,HEA	
5		631202520003	NAME-PL,HL-*848F HEA/HEE	
6		6316226200	STICKER,WARRANTY HEA ALL	
7		6320207600	USER-GUIDE,S450 HEI(EXP)	
8		B4210315101	PACKING ASSY,HL-5854B	
9		B4209501301C	BAG PE,MANUAL T0.03	
10		6243028300	BAG,PE(ST) CLEAR 14"/15"A	
11		6253060300	CUSHION "L",HL-5854B	
12		6253060400	CUSHION "R",HL-5854B	
13		B4210318601	KIT COVER,S560 EXP	
14		B4211512527A	REAR COVER,S560 EXP	
15		6201216107	COVER F.ASSY,S560 HEI	
16		B4214000301A	SPRING COMPRESSION	
17		M13443008012	SCREW ST2 BIN(+)3*8 MSZPC	
18		6201199120	COVER FRONT,HL-5854C HEI	
19		6215174903	KNOB POWER,HL5854C HEI(N)	
20		6215175003	KNOB VR,HL5854C HEI(N)	
21		6215175103	KNOB TACT,HL5854C HEI(N)	
22		6220060400	LED LENS POWER,HL5854B(N)	
23		6220060500	LED LENS,HL-5854B(N)	
24		B4219514875A	BOX CTN,SW-3 S560 EXP	
25		E4205013401	MAIN ASSY/S,S560 EXP	
26		B4008500100A	CABLE TIE	
27		E4208615401	PCBA M+C(T*)/S,S560 EXP	
28		3755000791	WIRE-ASS'Y,CRT GND S560	
29		5004000187	SCR-TT2,BIN(+) MC 4*14	
30		6129026900	SPECIAL,SCREW ST2(+)5*20	
31		3010100105	CRT,M36QAW351X111 5857	
32		3758000166	CBL-PWR,PGS UL/CSA WALL 1	
33		6201193407	SWIVEL&TILT ASSY,HL-5854C	
34		B4209500302A	BAG PE,SWIV(350*300) HEE	
35		B4211506301A	SWIVEL PAD	
36		B4211513215A	SWIVEL UPPER,HL-5854C	
37		5004000187	SCR-TT2,BIN(+) MC 4*14	
38		6201185904	SWIVEL BASE,15"	
39		6262004001	RUBBER FOOT,S450/S560	
40	P101	3500100904	INDUCT-FIX,D-COIL 5854C 1	
41	T601	6261022100	RUBBER PCB,CR60-70 L4848F	

NUM.	LOCATION	PART NUMBER	DESCRIPTION	REMARK
1		B4008500100A	CABLE TIE	
2		B4211505301A	GUIDE POWER SWITCH	
3		B4213501101A	RUBBER BAR	
4		E4208515401	PCBA M+C(I*)/S,S560 EXP	
5		E4208415461	PCBA M+C(A6*)/S,S560	
6		E4208415441	PCBA M+C(A4*)/S,S560	
7		E4208415451	PCBA M+C(A5*)/S,S560	
8		304010079401	PCB-SINGLE,S450/560 MAIN+	
9		M11143008012	SCREW,BIN(+) M3*8 MSZPC	
10		6124032500	H-SINK CRT,S560	
11		3754000017	WIRE-NS-M,1.0T->BRAID->0.	
12		3758500408	CBL-SGN,6P+7P ATTACHABLE	
13		6101137902	CHASSIS MAIN ASSY,S450/S5	
14		6101075403	CHASSIS MAIN,S450/S560	
15		6130020300	PEM,HL-5854C (H=10MM) SUM	
16		6223066501	SUPPORT,BUTTON P910	
17		6110094700	BKT PCB,HL4848F SECC T=1.	
18		6110102600	BKT,FBT SECC HL-7870A	
19		6110186900	BKT REAR,S450/S560	
20		6120033200	SHLD-PL FENCE CRT,S450/S5	
21		6129027600	SPECIAL,T.T/W(+) 3*8 MSZP	
22		6223056000	SUPPORT BOARD	
23	B101	3540200059	BD-FER,BFS3580	
24	B102	3540200059	BD-FER,BFS3580	
25	B103	3540200059	BD-FER,BFS3580	
26	B104	3540200059	BD-FER,BFS3580	
27	B105	3540200058	BD-FER,BFS3550	
28	B106	3540200058	BD-FER,BFS3550	
29	B107	3540200058	BD-FER,BFS3550	
30	B108	3540200058	BD-FER,BFS3550	
31	B109	3540200058	BD-FER,BFS3550	
32	B110	3540200059	BD-FER,BFS3580	
33	B304	3540200058	BD-FER,BFS3550	
34	B305	3540200059	BD-FER,BFS3580	
35	B306	3540200058	BD-FER,BFS3550	
36	B307	3540200058	BD-FER,BFS3550	
37	B401	3540200059	BD-FER,BFS3580	
38	B405	3540200058	BD-FER,BFS3550	
39	B409	3540200058	BD-FER,BFS3550	
40	B501	3540200058	BD-FER,BFS3550	
41	B502	3540200059	BD-FER,BFS3580	
42	B503	3540200058	BD-FER,BFS3550	
43	C101	E42007027050	CAP-CD,Y2 2200PF M TAP	
44	C102	E42007027050	CAP-CD,Y2 2200PF M TAP	
45	C103	E4200700909A	CAP-X,250VAC 0.22UF M FOR	

NUM.	LOCATION	PART NUMBER	DESCRIPTION	REMARK
46	C104	2101020018	CAP-CD,1000PF Y2 K TAP	
47	C105	2101020018	CAP-CD,1000PF Y2 K TAP	
48	C106	2001210001	CAP-AL,120UF 400V M 22*30	
49	C107	2101030035	CAP-CER,0.01UF 1KV K Y5P	
50	C110	2001010091	CAP-AL,100UF 25V M 6.3*11	
51	C111	2146840005	CAP-MPP,0.68UF 250V J FOR	
52	C112	CQ92BT2A222J	CAP-PE,100V 0.0022UF J	
53	C113	E44007011070	CAP-MCD,Z5U 50V 0.1UF Z	
54	C114	CQ92BT2A473J	CAP-PE,100V 0.047UF J	
55	C115	CF93BT1J334J	CAP-MPE,63V 0.33UF J	
56	C116	CF93BT1J334J	CAP-MPE,63V 0.33UF J	
57	C117	CQ92BT2A332J	CAP-PE,100V 3300PF J	
58	C118	CQ92BT2A103J	CAP-PE,100V 0.01UF J	
59	C119	CQ92BT2A332J	CAP-PE,100V 3300PF J	
60	C120	CK45BT3A221K	CAP-CD,1KV 220PF K TAP	
61	C121	210222001501	CAP-CER,Y1 2200PF M N-CUT	
62	C122	2002210076	CAP-AL,220UF 100V M 13*25	
63	C123	2001010097	CAP-AL,100UF 160V M 13*25	
64	C124	CE04BT1H221M	CAP-EL,SMS 50V 220UF M	
65	C125	2004710049	CAP-AL,470UF 25V M 10*16	
66	C126	CE04BT1C101M	CAP-EL,SMS 16V 100UF M	
67	C127	2001020038	CAP-AL,1000UF 25V M 12.5*	
68	C128	2004710049	CAP-AL,470UF 25V M 10*16	
69	C129	2101510007	CAP-CER,150PF 1KV K Y5P	
70	C130	CK45BT3A101K	CAP-CD,1KV 100PF 10%	
71	C131	CE04BT1C471M	CAP-EL,SMS 16V 470UF M	
72	C133	CQ92BT2A104J	CAP-PE,100V 0.1UF J	
73	C201	E44007011070	CAP-MCD,Z5U 50V 0.1UF Z	
74	C202	2001020038	CAP-AL,1000UF 25V M 12.5*	
75	C203	CQ92BT2A272J	CAP-PE,100V 0.0027UF J	
76	C204	CQ92BT2A333J	CAP-PE,100V 0.033UF J	
77	C205	CE04BT1H101M	CAP-EL,SMS 50V 100UF M	
78	C206	E44007011070	CAP-MCD,Z5U 50V 0.1UF Z	
79	C207	CQ92BT2A683J	CAP-PE,100V 0.068UF J	
80	C208	CQ92BT2A333J	CAP-PE,100V 0.033UF J	
81	C301	CF93BT1J154J	CAP-MPE,63V 0.15UF J	
82	C302	CF93BT1J104J	CAP-MPE,63V 0.1UF J	
83	C303	CF93BT1J104J	CAP-MPE,63V 0.1UF J	
84	C304	CQ92BT2A822J	CAP-PE,100V 0.0082UF J	
85	C305	E42007019070	CAP-PP/PE,100V 0.01UF J	
86	C306	2171230005	CAP-P-F,0.012UF 100V J RA	
87	C307	2133300004	CAP-MULT,33PF 50V J AXI	
88	C308	CQ92BT2A272J	CAP-PE,100V 0.0027UF J	
89	C309	2131010003	CAP-MULT,100PF 50V J AXI	
90	C310	2131010003	CAP-MULT,100PF 50V J AXI	

NUM.	LOCATION	PART NUMBER	DESCRIPTION	REMARK
91	C311	E44007011070	CAP-MCD,Z5U 50V 0.1UF Z	
92	C312	CQ92BT2A472J	CAP-PE,100V 0.0047UF J	
93	C313	CQ92BT2A223J	CAP-PE,100V 0.022UF J	
94	C314	CE04BT1C101M	CAP-EL,SMS 16V 100UF M	
95	C315	CE04BT1C102M	CAP-EL,SMS 16V 1000UF M	
96	C316	CE04BT1C470M	CAP-EL,SMS 16V 47UF M	
97	C317	CE04BT1V470M	CAP-EL,SMS 35V 47UF M	
98	C318	2134700002	CAP-MULT,47PF 50V J AXI	
99	C319	CE04BT1C101M	CAP-EL,SMS 16V 100UF M	
100	C320	CF93BT1J104J	CAP-MPE,63V 0.1UF J	
101	C321	CQ92BT2A272J	CAP-PE,100V 0.0027UF J	
102	C322	2001010093	CAP-AL,100UF 35V M 8*11.5	
103	C324	CK45BT3A331K	CAP-CE,1KV 330PF K TAP	
104	C325	2002200060	CAP-AL,22UF 250V M 16*31.	
105	C326	CF93BT1J104J	CAP-MPE,63V 0.1UF J	
106	C327	2175420002	CAP-P-F,5400PF 1.6KV J RA	
107	C328	2175620011	CAP-P-F,5600PF 630V J RAD	
108	C329	E44007011070	CAP-MCD,Z5U 50V 0.1UF Z	
109	C330	E44007011070	CAP-MCD,Z5U 50V 0.1UF Z	
110	C331	CK45BT3A222K	CAP-CD,1KV 2200PF K	
111	C332	2174540001	CAP-P-F,0.45UF 250V J FOR	
112	C333	2141340001	CAP-MP,0.13UF 250V J RAD	
113	C334	2144740017	CAP-MPP,0.47UF 250V J	
114	C335	CQ92BT2A153J	CAP-PE,100V 0.015UF J	
115	C336	CQ92BT2A153J	CAP-PE,100V 0.015UF J	
116	C337	2172230012	CAP-P-F,0.022UF 400V J RA	
117	C338	2142240021	CAP-M-P,0.22UF 250V J RAD	
118	C340	CE04BT1V101M	CAP-EL,SMS 35V 100UF M	
119	C341	CE04BT2C220M	CAP-EL,SMS 160V 22UF M	
120	C343	E44007011070	CAP-MCD,Z5U 50V 0.1UF Z	
121	C344	2131010003	CAP-MULT,100PF 50V J AXI	
122	C345	2141050009	CAP-M-P,1UF 100V J RAD	
123	C346	CQ92BT2A153J	CAP-PE,100V 0.015UF J	
124	C347	CQ92BT2A152J	CAP-PE,100V 1500PF J	
125	C348	CF93BT2A104J	CAP-MPE,100V 0.1UF J	
126	C349	CF93BT2A104J	CAP-MPE,100V 0.1UF J	
127	C350	CQ92BT2A472J	CAP-PE,100V 0.0047UF J	
128	C401	2132210004	CAP-MULT,220PF 50V J AXI	
129	C402	CF93BT1J104J	CAP-MPE,63V 0.1UF J	
130	C403	2141040020	CAP-M-P,0.1UF 250V J RAD	
131	C404	E44007011070	CAP-MCD,Z5U 50V 0.1UF Z	
132	C405	E44007011070	CAP-MCD,Z5U 50V 0.1UF Z	
133	C406	E44007011070	CAP-MCD,Z5U 50V 0.1UF Z	
134	C407	E44007011070	CAP-MCD,Z5U 50V 0.1UF Z	
135	C408	CE04BT1C331M	CAP-EL,SMS 16V 330UF M	

NUM.	LOCATION	PART NUMBER	DESCRIPTION	REMARK
136	C409	CE04BT1C101M	CAP-EL,SMS 16V 100UF M	
137	C413	E44007011070	CAP-MCD,Z5U 50V 0.1UF Z	
138	C414	E44007011070	CAP-MCD,Z5U 50V 0.1UF Z	
139	C415	E44007011070	CAP-MCD,Z5U 50V 0.1UF Z	
140	C416	E44007011070	CAP-MCD,Z5U 50V 0.1UF Z	
141	C417	CE04BT1C470M	CAP-EL,SMS 16V 47UF M	
142	C418	E44007011070	CAP-MCD,Z5U 50V 0.1UF Z	
143	C419	E44007011070	CAP-MCD,Z5U 50V 0.1UF Z	
144	C420	E44007011070	CAP-MCD,Z5U 50V 0.1UF Z	
145	C424	2001090053	CAP-AL,1UF 100V M 5*11 NP	
146	C425	2141040020	CAP-M-P,0.1UF 250V J RAD	
147	C426	CE04BT1C470M	CAP-EL,SMS 16V 47UF M	
148	C427	2001090053	CAP-AL,1UF 100V M 5*11 NP	
149	C428	2141040020	CAP-M-P,0.1UF 250V J RAD	
150	C430	CQ92BT2A104J	CAP-PE,100V 0.1UF J	
151	C431	E44007011070	CAP-MCD,Z5U 50V 0.1UF Z	
152	C432	2001090053	CAP-AL,1UF 100V M 5*11 NP	
153	C433	2141040020	CAP-M-P,0.1UF 250V J RAD	
154	C436	CK45BF2H103K	CAP-CD,500V 0.01UF K	
155	C437	2101030035	CAP-CER,0.01UF 1KV K Y5P	
156	C438	E44007011070	CAP-MCD,Z5U 50V 0.1UF Z	
157	C439	CE04BT2A101M	CAP-EL,SMS 100V 100UF M	
158	C440	2001000074	CAP-AL,10UF 160V M 10*13	
159	C441	CE04BT1H4R7M	CAP-EL,SMS 50V 4.7UF M	
160	C442	CE04BT1H4R7M	CAP-EL,SMS 50V 4.7UF M	
161	C443	E44007011070	CAP-MCD,Z5U 50V 0.1UF Z	
162	C501	E42007019220	CAP-PP/PE,100V 680PF J	
163	C502	2133300004	CAP-MULT,33PF 50V J AXI	
164	C503	CQ92BT2A103J	CAP-PE,100V 0.01UF J	
165	C504	E44007011070	CAP-MCD,Z5U 50V 0.1UF Z	
166	C505	E44007011070	CAP-MCD,Z5U 50V 0.1UF Z	
167	C506	E44007011070	CAP-MCD,Z5U 50V 0.1UF Z	
168	C507	E44007011070	CAP-MCD,Z5U 50V 0.1UF Z	
169	C508	E44007011070	CAP-MCD,Z5U 50V 0.1UF Z	
170	C509	E44007011070	CAP-MCD,Z5U 50V 0.1UF Z	
171	C510	CE04BT1H4R7M	CAP-EL,SMS 50V 4.7UF M	
172	C511	CE04BT1HR47M	CAP-EL,SMS 50V 0.47UF M	
173	C512	CE04BT1C221M	CAP-EL,SMS 16V 220UF M	
174	C513	E44007011070	CAP-MCD,Z5U 50V 0.1UF Z	
175	C514	2132200002	CAP-MULT,22PF 50V J AXI	
176	C515	2132200002	CAP-MULT,22PF 50V J AXI	
177	C516	E44007011070	CAP-MCD,Z5U 50V 0.1UF Z	
178	C517	2131010003	CAP-MULT,100PF 50V J AXI	
179	C518	CQ92BT2A104J	CAP-PE,100V 0.1UF J	
180	C601	CQ92BT2A153J	CAP-PE,100V 0.015UF J	

NUM.	LOCATION	PART NUMBER	DESCRIPTION	REMARK
181	C602	CQ92BT2A104J	CAP-PE,100V 0.1UF J	
182	C603	CE04BT1H4R7M	CAP-EL,SMS 50V 4.7UF M	
183	C604	CE04BT1C470M	CAP-EL,SMS 16V 47UF M	
184	C605	CE04BT2E100M	CAP-EL,SMS 250V 10UF M	
185	C606	CE04BT1C221M	CAP-EL,SMS 16V 220UF M	
186	C607	CE04BT1C470M	CAP-EL,SMS 16V 47UF M	
187	C608	CE04BT1H2R2M	CAP-EL,SMS 50V 2.2UF M	
188	C609	CE04BT1C470M	CAP-EL,SMS 16V 47UF M	
189	D101	DT1N5398	DIODE 1N5398 TAPING	
190	D102	DT1N5398	DIODE 1N5398 TAPING	
191	D103	DT1N5398	DIODE 1N5398 TAPING	
192	D104	DT1N5398	DIODE 1N5398 TAPING	
193	D105	DTBYV26E	DIODE,BYV26E SORTED	
194	D106	DT1N4148	DIODE,1N4148 TAPING	
195	D107	DT1N4007	DIODE,1000V 1.0A TAP	
196	D108	DT1N4148	DIODE,1N4148 TAPING	
197	D109	DT1N4148	DIODE,1N4148 TAPING	
198	D110	DT1N4936	DIODE,400V 1.0A 1N4936	
199	D111	3100500142	DI-SW,SUF15JL-5700 LEAD	
200	D112	DTBYV26E	DIODE,BYV26E SORTED	
201	D113	DTRGP10G	DIODE,400V 1.0A	
202	D114	3100500086	DI-SW,S3L20U-4004P15 LEAD	
203	D115	3100500086	DI-SW,S3L20U-4004P15 LEAD	
204	D116	3100500142	DI-SW,SUF15JL-5700 LEAD	
205	D301	DT1N4148	DIODE,1N4148 TAPING	
206	D302	DT1N4148	DIODE,1N4148 TAPING	
207	D303	DT1N4936	DIODE,400V 1.0A 1N4936	
208	D305	6130014200	EYELET,1.6PAI BRASS T=0.4	
209	D305	M11143008012	SCREW,BIN(+) M3*8 MSZPC	
210	D305	M31100030012	NUT HEX,6N1-3 MSZPC	
211	D305	3102000210	DI-REC,5TUZ47C LEAD	
212	D306	3100500093	DI-SW,S3L60-4004P15 LEAD	
213	D307	3100500093	DI-SW,S3L60-4004P15 LEAD	
214	D308	3100500140	DI-SW,UF5404L-5705 LEAD	
215	D309	DT1N4148	DIODE,1N4148 TAPING	
216	D310	DT1N4007	DIODE,1000V 1.0A TAP	
217	D311	DT1N4007	DIODE,1000V 1.0A TAP	
218	D312	DT1N4936	DIODE,400V 1.0A 1N4936	
219	D313	DT1N4936	DIODE,400V 1.0A 1N4936	
220	D314	3100500091	DI-SW,RGP15G LEAD	
221	D315	DT1N4936	DIODE,400V 1.0A 1N4936	
222	D316	DT1N4936	DIODE,400V 1.0A 1N4936	
223	D317	DTSB130	DIODE,SCHOTTKY 30V 1A	
224	D326	3100500094	DI-SW,3TH41(LC6-20) LEAD	
225	D401	DTISS81	DIODE,SWITCHING ISS81	

NUM.	LOCATION	PART NUMBER	DESCRIPTION	REMARK
226	D402	DTISS81	DIODE,SWITCHING ISS81	
227	D403	DTISS81	DIODE,SWITCHING ISS81	
228	D404	DTISS81	DIODE,SWITCHING ISS81	
229	D405	DTISS81	DIODE,SWITCHING ISS81	
230	D406	DTISS81	DIODE,SWITCHING ISS81	
231	D407	DT1N4148	DIODE,1N4148 TAPING	
232	D408	DT1N4148	DIODE,1N4148 TAPING	
233	D409	DT1N4148	DIODE,1N4148 TAPING	
234	D410	DT1N4148	DIODE,1N4148 TAPING	
235	D411	DT1N4148	DIODE,1N4148 TAPING	
236	D412	DT1N4148	DIODE,1N4148 TAPING	
237	D413	DTISS81	DIODE,SWITCHING ISS81	
238	D414	DTISS81	DIODE,SWITCHING ISS81	
239	D415	DTISS81	DIODE,SWITCHING ISS81	
240	D601	DT1N4936	DIODE,400V 1.0A 1N4936	
241	D603	DT1N4148	DIODE,1N4148 TAPING	
242	D604	DT1N4148	DIODE,1N4148 TAPING	
243	D605	DT1N4148	DIODE,1N4148 TAPING	
244	F101	E42076013010	FUSE CLIP,TAPING	
245	F101	E42025012060	FUSE,TIME LAG 19181 3.15A	
246	FL401	E42029012020	NOISE FILTER,TH28123MA	
247	FL403	E42029012020	NOISE FILTER,TH28123MA	
248	FR201	2540228001	RES-FUS,0.22 0.5W J A	
249	FR202	2540478001	RES-FUS,0.47 1W J A	
250	FR302	2540338002	RES-FUS,0.33 1W J A	
251	FR601	2540478002	RES-FUS,0.47 0.5W J A	
252	IN101	E4204531904	BRKT AC INLET ASSY,L5857C	
253	J102	375300002401	WIRE-NS-S43MM TAP. SDA 1/	
254	J103	375300002401	WIRE-NS-S43MM TAP. SDA 1/	
255	J104	375300002401	WIRE-NS-S43MM TAP. SDA 1/	
256	J105	375300002401	WIRE-NS-S43MM TAP. SDA 1/	
257	J106	375300002401	WIRE-NS-S43MM TAP. SDA 1/	
258	J107	375300002401	WIRE-NS-S43MM TAP. SDA 1/	
259	J109	375300002401	WIRE-NS-S43MM TAP. SDA 1/	
260	J110	375300002401	WIRE-NS-S43MM TAP. SDA 1/	
261	J111	375300002401	WIRE-NS-S43MM TAP. SDA 1/	
262	J112	375300002401	WIRE-NS-S43MM TAP. SDA 1/	
263	J113	375300002401	WIRE-NS-S43MM TAP. SDA 1/	
264	J201	375300002401	WIRE-NS-S43MM TAP. SDA 1/	
265	J202	375300002401	WIRE-NS-S43MM TAP. SDA 1/	
266	J203	375300002401	WIRE-NS-S43MM TAP. SDA 1/	
267	J204	375300002401	WIRE-NS-S43MM TAP. SDA 1/	
268	J205	375300002401	WIRE-NS-S43MM TAP. SDA 1/	
269	J206	375300002401	WIRE-NS-S43MM TAP. SDA 1/	
270	J207	375300002401	WIRE-NS-S43MM TAP. SDA 1/	

NUM.	LOCATION	PART NUMBER	DESCRIPTION	REMARK
271	J208	375300002401	WIRE-NS-S43MM TAP. SDA 1/	
272	J301	375300002401	WIRE-NS-S43MM TAP. SDA 1/	
273	J302	375300002401	WIRE-NS-S43MM TAP. SDA 1/	
274	J303	375300002401	WIRE-NS-S43MM TAP. SDA 1/	
275	J305	375300002401	WIRE-NS-S43MM TAP. SDA 1/	
276	J306	375300002401	WIRE-NS-S43MM TAP. SDA 1/	
277	J309	375300002401	WIRE-NS-S43MM TAP. SDA 1/	
278	J310	375300002401	WIRE-NS-S43MM TAP. SDA 1/	
279	J311	375300002401	WIRE-NS-S43MM TAP. SDA 1/	
280	J312	375300002401	WIRE-NS-S43MM TAP. SDA 1/	
281	J313	375300002401	WIRE-NS-S43MM TAP. SDA 1/	
282	J314	375300002401	WIRE-NS-S43MM TAP. SDA 1/	
283	J315	375300002401	WIRE-NS-S43MM TAP. SDA 1/	
284	J316	375300002401	WIRE-NS-S43MM TAP. SDA 1/	
285	J318	375300002401	WIRE-NS-S43MM TAP. SDA 1/	
286	J319	375300002401	WIRE-NS-S43MM TAP. SDA 1/	
287	J320	375300002401	WIRE-NS-S43MM TAP. SDA 1/	
288	J321	375300002401	WIRE-NS-S43MM TAP. SDA 1/	
289	J322	375300002401	WIRE-NS-S43MM TAP. SDA 1/	
290	J324	375300002401	WIRE-NS-S43MM TAP. SDA 1/	
291	J325	375300002401	WIRE-NS-S43MM TAP. SDA 1/	
292	J326	375300002401	WIRE-NS-S43MM TAP. SDA 1/	
293	J327	375300002401	WIRE-NS-S43MM TAP. SDA 1/	
294	J330	375300002401	WIRE-NS-S43MM TAP. SDA 1/	
295	J331	375300002401	WIRE-NS-S43MM TAP. SDA 1/	
296	J332	375300002401	WIRE-NS-S43MM TAP. SDA 1/	
297	J334	375300002401	WIRE-NS-S43MM TAP. SDA 1/	
298	J335	375300002401	WIRE-NS-S43MM TAP. SDA 1/	
299	J336	375300002401	WIRE-NS-S43MM TAP. SDA 1/	
300	J337	375300002401	WIRE-NS-S43MM TAP. SDA 1/	
301	J338	375300002401	WIRE-NS-S43MM TAP. SDA 1/	
302	J339	375300002401	WIRE-NS-S43MM TAP. SDA 1/	
303	J340	375300002401	WIRE-NS-S43MM TAP. SDA 1/	
304	J341	375300002401	WIRE-NS-S43MM TAP. SDA 1/	
305	J342	375300002401	WIRE-NS-S43MM TAP. SDA 1/	
306	J343	375300002401	WIRE-NS-S43MM TAP. SDA 1/	
307	J344	375300002401	WIRE-NS-S43MM TAP. SDA 1/	
308	J345	375300002401	WIRE-NS-S43MM TAP. SDA 1/	
309	J346	375300002401	WIRE-NS-S43MM TAP. SDA 1/	
310	J347	375300002401	WIRE-NS-S43MM TAP. SDA 1/	
311	J401	375300002401	WIRE-NS-S43MM TAP. SDA 1/	
312	J403	375300002401	WIRE-NS-S43MM TAP. SDA 1/	
313	J407	375300002401	WIRE-NS-S43MM TAP. SDA 1/	
314	J408	375300002401	WIRE-NS-S43MM TAP. SDA 1/	
315	J414	375300002401	WIRE-NS-S43MM TAP. SDA 1/	

NUM.	LOCATION	PART NUMBER	DESCRIPTION	REMARK
316	J415	375300002401	WIRE-NS-S43MM TAP. SDA 1/	
317	J418	375300002401	WIRE-NS-S43MM TAP. SDA 1/	
318	J450	375300002401	WIRE-NS-S43MM TAP. SDA 1/	
319	J451	375300002401	WIRE-NS-S43MM TAP. SDA 1/	
320	J452	375300002401	WIRE-NS-S43MM TAP. SDA 1/	
321	J453	375300002401	WIRE-NS-S43MM TAP. SDA 1/	
322	J455	375300002401	WIRE-NS-S43MM TAP. SDA 1/	
323	J457	375300002401	WIRE-NS-S43MM TAP. SDA 1/	
324	J458	375300002401	WIRE-NS-S43MM TAP. SDA 1/	
325	J460	375300002401	WIRE-NS-S43MM TAP. SDA 1/	
326	J461	375300002401	WIRE-NS-S43MM TAP. SDA 1/	
327	J462	375300002401	WIRE-NS-S43MM TAP. SDA 1/	
328	J463	375300002401	WIRE-NS-S43MM TAP. SDA 1/	
329	J464	375300002401	WIRE-NS-S43MM TAP. SDA 1/	
330	J466	375300002401	WIRE-NS-S43MM TAP. SDA 1/	
331	J467	3540200059	BD-FER,BFS3580	
332	J469	375300002401	WIRE-NS-S43MM TAP. SDA 1/	
333	J470	375300002401	WIRE-NS-S43MM TAP. SDA 1/	
334	J471	375300002401	WIRE-NS-S43MM TAP. SDA 1/	
335	J473	375300002401	WIRE-NS-S43MM TAP. SDA 1/	
336	J474	375300002401	WIRE-NS-S43MM TAP. SDA 1/	
337	J475	375300002401	WIRE-NS-S43MM TAP. SDA 1/	
338	J476	375300002401	WIRE-NS-S43MM TAP. SDA 1/	
339	J501	375300002401	WIRE-NS-S43MM TAP. SDA 1/	
340	J502	375300002401	WIRE-NS-S43MM TAP. SDA 1/	
341	J503	375300002401	WIRE-NS-S43MM TAP. SDA 1/	
342	J504	375300002401	WIRE-NS-S43MM TAP. SDA 1/	
343	J505	375300002401	WIRE-NS-S43MM TAP. SDA 1/	
344	J506	375300002401	WIRE-NS-S43MM TAP. SDA 1/	
345	J507	375300002401	WIRE-NS-S43MM TAP. SDA 1/	
346	J508	375300002401	WIRE-NS-S43MM TAP. SDA 1/	
347	J509	375300002401	WIRE-NS-S43MM TAP. SDA 1/	
348	J510	375300002401	WIRE-NS-S43MM TAP. SDA 1/	
349	J511	375300002401	WIRE-NS-S43MM TAP. SDA 1/	
350	J512	375300002401	WIRE-NS-S43MM TAP. SDA 1/	
351	J513	375300002401	WIRE-NS-S43MM TAP. SDA 1/	
352	J514	375300002401	WIRE-NS-S43MM TAP. SDA 1/	
353	J515	375300002401	WIRE-NS-S43MM TAP. SDA 1/	
354	J516	375300002401	WIRE-NS-S43MM TAP. SDA 1/	
355	J517	375300002401	WIRE-NS-S43MM TAP. SDA 1/	
356	J518	375300002401	WIRE-NS-S43MM TAP. SDA 1/	
357	J521	375300002401	WIRE-NS-S43MM TAP. SDA 1/	
358	J522	375300002401	WIRE-NS-S43MM TAP. SDA 1/	
359	J523	375300002401	WIRE-NS-S43MM TAP. SDA 1/	
360	J524	375300002401	WIRE-NS-S43MM TAP. SDA 1/	

NUM.	LOCATION	PART NUMBER	DESCRIPTION	REMARK
361	J525	375300002401	WIRE-NS-S43MM TAP. SDA 1/	
362	J526	375300002401	WIRE-NS-S43MM TAP. SDA 1/	
363	J527	375300002401	WIRE-NS-S43MM TAP. SDA 1/	
364	J528	375300002401	WIRE-NS-S43MM TAP. SDA 1/	
365	J529	375300002401	WIRE-NS-S43MM TAP. SDA 1/	
366	J530	375300002401	WIRE-NS-S43MM TAP. SDA 1/	
367	J531	375300002401	WIRE-NS-S43MM TAP. SDA 1/	
368	J532	375300002401	WIRE-NS-S43MM TAP. SDA 1/	
369	J533	375300002401	WIRE-NS-S43MM TAP. SDA 1/	
370	J534	375300002401	WIRE-NS-S43MM TAP. SDA 1/	
371	J535	375300002401	WIRE-NS-S43MM TAP. SDA 1/	
372	J536	375300002401	WIRE-NS-S43MM TAP. SDA 1/	
373	J537	375300002401	WIRE-NS-S43MM TAP. SDA 1/	
374	J539	375300002401	WIRE-NS-S43MM TAP. SDA 1/	
375	J541	375300002401	WIRE-NS-S43MM TAP. SDA 1/	
376	J542	375300002401	WIRE-NS-S43MM TAP. SDA 1/	
377	J601	375300002401	WIRE-NS-S43MM TAP. SDA 1/	
378	J602	375300002401	WIRE-NS-S43MM TAP. SDA 1/	
379	J604	375300002401	WIRE-NS-S43MM TAP. SDA 1/	
380	J606	375300002401	WIRE-NS-S43MM TAP. SDA 1/	
381	L101	3520200073	FILTER LC,SQE2930 30MH MI	
382	L102	3520200074	FILTER-LC,UU1116 1MH MIN	
383	L301	E42019105040	CHOKE COIL,110UH DR1420 4	
384	L301	6130014200	EYELET,1.6PAI BRASS T=0.4	
385	L302	6130014200	EYELET,1.6PAI BRASS T=0.4	
386	L302	3500100510	INDUCT-FIX,DR1420 150UH 5	
387	L303	6130014200	EYELET,1.6PAI BRASS T=0.4	
388	L303	3500100903	INDUCT-FIX,H-LIN. 22.5T S	
389	L304	3500100523	INDUCT-FIX,DR0808 8.2MH M	
390	L410	3500101324	INDUCT-FIX,AL03TB1ROM M A	
391	L411	3500101324	INDUCT-FIX,AL03TB1ROM M A	
392	L412	3500101324	INDUCT-FIX,AL03TB1ROM M A	
393	LD101	3330600363	LED,339-1YGW/F45-12	
394	LD501	3330600329	LED,SM5511-F7T	
395	LD501	B4211516201B	HOLDER LED, POWER	
396	LD502	3330600329	LED,SM5511-F7T	
397	LD503	3330600329	LED,SM5511-F7T	
398	LD504	3330600329	LED,SM5511-F7T	
399	LD505	3330600329	LED,SM5511-F7T	
400	LD506	B4211516301A	HOLDER LED	
401	P101	3720101217	CONN-M,AC INNET,LOCKING 3	
402	P101	E42043055040	CONN,POST 2P 14MM	
403	P102	M17744006012	SCREW,BIN(+) M4*6 MSZPC	
404	P302	E42043055030	CONN,POST 4P 34MM	
405	P303	6130014100	EYELET,2.7PAI BRASS T=0.4	

NUM.	LOCATION	PART NUMBER	DESCRIPTION	REMARK
406	P401	3720101388	CONN-M,SMW200-06P	
407	P402	372500415201	CONN-A,6P FLAT 230MM RED	
408	P403	3,7201E+11	CONN-M,POST 1P DEGT235 14	
409	P404	3720101316	CONN-M,DPP-150 1	
410	P405	3725004152	CONN-A,6P FLAT 230MM BK	
411	P501	E42043007010	CONN POST,2P 5267-02A	
412	P502	3720101389	CONN-M,SMW200-07P	
413	Q101	M11143008012	SCREW,BIN(+) M3*8 MSZPC	
414	Q101	3114000105	FET,2SK2564-4112 LEAD	
415	Q101	6124030600	H-SINK MN,HL-5854C	
416	Q102	TTKSP45	TR,KSP45	
417	Q103	TTKTC1815Y	TR,KTC3198Y	
418	Q104	TTKTA966AY	TR,KTA1273Y	
419	Q105	TTKRC102M	TR,SWITCHING KRC102M	
420	Q106	TTKTA966AY	TR,KTA1273Y	
421	Q107	TTKRC102M	TR,SWITCHING KRC102M	
422	Q301	3114000138	FET,VN1206L LEAD	
423	Q302	6130014100	EYELET,2.7PAI BRASS T=0.4	
424	Q302	M11143008012	SCREW,BIN(+) M3*8 MSZPC	
425	Q302	M31100030012	NUT HEX,6N1-3 MSZPC	
426	Q302	3110100600	TR-GEN,2SC5386 LEAD	
427	Q303	M11143008012	SCREW,BIN(+) M3*8 MSZPC	
428	Q303	3114000107	FET,YTA630/IRF630M LEAD	
429	Q303	6124020504	H-SINK POWER(35MM),L5854C	
430	Q304	TTKTC1815Y	TR,KTC3198Y	
431	Q305	TTKTA1015Y	TR,KTA1266Y	
432	Q306	TTKTC1815Y	TR,KTC3198Y	
433	Q307	TTKTC1815Y	TR,KTC3198Y	
434	Q308	TTKTC1815Y	TR,KTC3198Y	
435	Q309	3114000107	FET,YTA630/IRF630M LEAD	
436	Q310	TNIRF640	TR,FET IRF640(WITH BUSHIN	
437	Q311	TTKTA1275Y	TR,KTA1275Y	
438	Q312	M11143008012	SCREW,BIN(+) M3*8 MSZPC	
439	Q312	M31100030012	NUT HEX,6N1-3 MSZPC	
440	Q312	3110100665	TR-GEN,KTD2061-Y LEAD	
441	Q401	TTKTC1815Y	TR,KTC3198Y	
442	Q402	TTKTC1815Y	TR,KTC3198Y	
443	Q403	TTKTC1815Y	TR,KTC3198Y	
444	Q501	TTKTC1815Y	TR,KTC3198Y	
445	Q502	TTKTC1815Y	TR,KTC3198Y	
446	Q601	TTKSA733CY	TR,KSA733C-Y	
447	Q602	TTKTA1275Y	TR,KTA1275Y	
448	Q603	TTKTC1815Y	TR,KTC3198Y	
449	Q604	TTKTA1275Y	TR,KTA1275Y	
450	Q605	TTKTC1815Y	TR,KTC3198Y	

NUM.	LOCATION	PART NUMBER	DESCRIPTION	REMARK
451	Q606	TTKSA733CY	TR,KSA733C-Y	
452	R101	RD-2P0T0105J	RES-CF,RD 1/2W 1M OHM J	
453	R102	2461802001	RES-MOF,18K 2W J M	
454	R103	RD-2P0T0120J	RES-CF,RD 1/2W 12 OHM J	
455	R104	RD-8P0T0154J	RES-CF,RD 1/8W 150K OHM J	
456	R105	RD-8P0T0393J	RES-CF,RD 1/8W 39K OHM J	
457	R106	RD-8P0T0220J	RES-CF,RD 1/8W 22 OHM J	
458	R107	RD-8P0T0391J	RES-CF,RD 1/8W 390 OHM J	
459	R108	RD-8P0T0102J	RES-CF,RD 1/8W 1K OHM J	
460	R109	2460228004	RES-MOF,0.22 2W J A	
461	R110	RD-8P0T0243J	RES-CF,RD 1/8W 24K OHM J	
462	R111	RD-8P0T0204J	RES-CF,RD 1/8W 200K OHM J	
463	R112	RD-8P0T0472J	RES-CF,RD 1/8W 4.7K OHM J	
464	R113	RD-8P0T0154J	RES-CF,RD 1/8W 150K OHM J	
465	R114	2461502004	RES-MOF,15K 1W J M	
466	R115	RD-8P0T0824J	RES-CF,RD 1/8W 820K OHM J	
467	R116	RD-8P0T0221J	RES-CF,RD 1/8W 220 OHM J	
468	R117	RD-8P0T0470J	RES-CF,RD 1/8W 47 OHM J	
469	R118	RD-8P0T0681J	RES-CF,RD 1/8W 680 OHM J	
470	R119	RD-4P0T0681J	RES-CF,RD 1/4W 680 OHM J	
471	R120	2461802001	RES-MOF,18K 2W J M	
472	R121	2464709006	RES-MOF,47 1W J M	
473	R122	2461500004	RES-MOF,150 2W J M	
474	R123	RD-8P0T0681J	RES-CF,RD 1/8W 680 OHM J	
475	R124	RD-2P0T0102J	RES-CF,RD 1/2W 1K OHM J	
476	R125	2463308005	RES-MOF,3.3 2W J M	
477	R126	2463308005	RES-MOF,3.3 2W J M	
478	R127	RD-8P0T0473J	RES-CF,RD 1/8W 47K OHM J	
479	R129	2464709006	RES-MOF,47 1W J M	
480	R201	RD-8P0T0222J	RES-CF,RD 1/8W 2.2K OHM J	
481	R202	RD-8P0T0102J	RES-CF,RD 1/8W 1K OHM J	
482	R203	RD-8P0T0102J	RES-CF,RD 1/8W 1K OHM J	
483	R205	2400918002	RES-CF,0.91 0.25W J A	
484	R206	RD-2P0T0271J	RES-CF,RD 1/2W 270 OHM J	
485	R207	RD-4P0T0220J	RES-CF,RD 1/4W 22 OHM J	
486	R208	RD-4P0T0333J	RES-CF,RD 1/4W 33K OHM J	
487	R209	2468208002	RES-MOF,8.2 2W J M	
488	R301	RD-8P0T0221J	RES-CF,RD 1/8W 220 OHM J	
489	R302	RD-8P0T0221J	RES-CF,RD 1/8W 220 OHM J	
490	R303	RD-8P0T0473J	RES-CF,RD 1/8W 47K OHM J	
491	R304	RD-8P0T0223J	RES-CF,RD 1/8W 22K OHM J	
492	R305	RD-8P0T0332J	RES-CF,RD 1/8W 3.3K OHM J	
493	R306	2447500002	RES-MF,750 0.125W F A	
494	R307	2442871001	RES-MF,2.87K 0.125W F A	
495	R308	RD-8P0T0563J	RES-CF,RD 1/8W 56K OHM J	

NUM.	LOCATION	PART NUMBER	DESCRIPTION	REMARK
496	R310	RD-8P0T0101J	RES-CF,RD 1/8W 100 OHM J	
497	R311	RD-8P0T0102J	RES-CF,RD 1/8W 1K OHM J	
498	R312	RD-8P0T0101J	RES-CF,RD 1/8W 100 OHM J	
499	R313	RD-8P0T0101J	RES-CF,RD 1/8W 100 OHM J	
500	R314	RD-8P0T0471J	RES-CF,RD 1/8W 470 OHM J	
501	R315	RD-8P0T0472J	RES-CF,RD 1/8W 4.7K OHM J	
502	R316	RD-8P0T0102J	RES-CF,RD 1/8W 1K OHM J	
503	R317	RD-8P0T0472J	RES-CF,RD 1/8W 4.7K OHM J	
504	R318	RD-8P0T0154J	RES-CF,RD 1/8W 150K OHM J	
505	R319	RN-8P0T7501F	RES-MF,RN 1/8W 7.5KOHM F	
506	R321	RN-8P0T1202F	RES-MF,RN 1/8W 12KOHM F	
507	R322	RN-8P0T1002F	RES-MF,RN 1/8W 10K OHM F	
508	R323	RD-8P0T0393J	RES-CF,RD 1/8W 39K OHM J	
509	R324	2461009007	RES-MOF,10 2W J M	
510	R325	RD-8P0T0220J	RES-CF,RD 1/8W 22 OHM J	
511	R326	RD-2P0T0121J	RES-CF,RD 1/2W 120 OHM J	
512	R327	RD-2P0T01R0J	RES-CF,RD 1/2W 1.0 OHM J	
513	R328	RD-8P0T0470J	RES-CF,RD 1/8W 47 OHM J	
514	R330	RD-4P0T0274J	RES-CF,RD 1/4W 270K OHM J	
515	R331	2461501001	RES-MOF,1.5K 1W J A	
516	R332	RD-8P0T0472J	RES-CF,RD 1/8W 4.7K OHM J	
517	R334	RD-8P0T0220J	RES-CF,RD 1/8W 22 OHM J	
518	R335	RD-8P0T0273J	RES-CF,RD 1/8W 27K OHM J	
519	R337	2460508003	RES-MOF,0.5 2W J M	
520	R339	RS01P0T0221J	RES-MOF,RS 1W 220 OHM J	
521	R340	RD-8P0T0472J	RES-CF,RD 1/8W 4.7K OHM J	
522	R341	RD-8P0T0223J	RES-CF,RD 1/8W 22K OHM J	
523	R342	RD-8P0T0223J	RES-CF,RD 1/8W 22K OHM J	
524	R343	RD-8P0T0472J	RES-CF,RD 1/8W 4.7K OHM J	
525	R344	RD-8P0T0104J	RES-CF,RD 1/8W 100K OHM J	
526	R345	2460478003	RES-MOF,0.47 1W J M	
527	R346	RD-8P0T0473J	RES-CF,RD 1/8W 47K OHM J	
528	R347	RD-8P0T0104J	RES-CF,RD 1/8W 100K OHM J	
529	R348	RD-8P0T0473J	RES-CF,RD 1/8W 47K OHM J	
530	R349	2461500004	RES-MOF,150 2W J M	
531	R351	RD-8P0T0473J	RES-CF,RD 1/8W 47K OHM J	
532	R352	RD-8P0T0154J	RES-CF,RD 1/8W 150K OHM J	
533	R353	RD-8P0T0394J	RES-CF,RD 1/8W 390K OHM J	
534	R354	RD-8P0T0153J	RES-CF,RD 1/8W 15K OHM J	
535	R355	RD-8P0T0104J	RES-CF,RD 1/8W 100K OHM J	
536	R356	RD-2P0T0152J	RES-CF,RD 1/2W 1.5KOHM J	
537	R357	2461201005	RES-MOF,1.2K 1W J M	
538	R358	RD-8P0T0912J	RES-CF,RD 1/8W 9.1K OHM J	
539	R359	RD-8P0T0563J	RES-CF,RD 1/8W 56K OHM J	
540	R360	RD-8P0T0332J	RES-CF,RD 1/8W 3.3K OHM J	

NUM.	LOCATION	PART NUMBER	DESCRIPTION	REMARK
541	R361	RD-8P0T0473J	RES-CF,RD 1/8W 47K OHM J	
542	R362	2461500004	RES-MOF,150 2W J M	
543	R363	RD-8P0T0102J	RES-CF,RD 1/8W 1K OHM J	
544	R364	RD-8P0T0103J	RES-CF,RD 1/8W 10KOHM J	
545	R365	RD-8P0T0394J	RES-CF,RD 1/8W 390K OHM J	
546	R366	RD-8P0T0102J	RES-CF,RD 1/8W 1K OHM J	
547	R368	RD-4P0T0330J	RES-CF,RD 1/4W 33 OHM J	
548	R401	RD-8P0T0223J	RES-CF,RD 1/8W 22K OHM J	
549	R402	RD-8P0T0562J	RES-CF,RD 1/8W 5.6K OHM J	
550	R403	RD-8P0T0333J	RES-CF,RD 1/8W 33K OHM J	
551	R404	RD-8P0T0102J	RES-CF,RD 1/8W 1K OHM J	
552	R405	RD-8P0T0562J	RES-CF,RD 1/8W 5.6K OHM J	
553	R406	RD-8P0T0682J	RES-CF,RD 1/8W 6.8K OHM J	
554	R407	RD-8P0T0512J	RES-CF,RD 1/8W 5.1K OHM J	
555	R408	RD-8P0T0750J	RES-CF,RD 1/8W 75 OHM J	
556	R409	RD-8P0T0750J	RES-CF,RD 1/8W 75 OHM J	
557	R410	RD-8P0T0750J	RES-CF,RD 1/8W 75 OHM J	
558	R411	RD-4P0T0511J	RES-CF,RD 1/4W 510 OHM J	
559	R412	2465609005	RES-MOF,56 2W J M	
560	R413	RD-8P0T0331J	RES-CF,RD 1/8W 330 OHM J	
561	R414	RD-8P0T0330J	RES-CF,RD 1/8W 33 OHM J	
562	R415	RD-8P0T0331J	RES-CF,RD 1/8W 330 OHM J	
563	R416	RD-8P0T0330J	RES-CF,RD 1/8W 33 OHM J	
564	R417	RD-8P0T0331J	RES-CF,RD 1/8W 330 OHM J	
565	R418	RD-8P0T0330J	RES-CF,RD 1/8W 33 OHM J	
566	R419	RD-8P0T0223J	RES-CF,RD 1/8W 22K OHM J	
567	R420	RD-8P0T0103J	RES-CF,RD 1/8W 10KOHM J	
568	R422	RD-8P0T0824J	RES-CF,RD 1/8W 820K OHM J	
569	R423	RD-8P0T0182J	RES-CF,RD 1/8W 1.8K OHM J	
570	R427	RD-8P0T0824J	RES-CF,RD 1/8W 820K OHM J	
571	R428	RD-8P0T0182J	RES-CF,RD 1/8W 1.8K OHM J	
572	R432	RD-8P0T0824J	RES-CF,RD 1/8W 820K OHM J	
573	R433	RD-8P0T0182J	RES-CF,RD 1/8W 1.8K OHM J	
574	R436	RD-2P0T0220J	RES-CF,RD 1/2W 22 OHM J	
575	R437	RD-2P0T0220J	RES-CF,RD 1/2W 22 OHM J	
576	R438	RD-2P0T0220J	RES-CF,RD 1/2W 22 OHM J	
577	R439	RD-4P0T0102J	RES-CF,RD 1/4W 1K OHM J	
578	R440	RD-4P0T0510J	RES-CF,RD 1/4W 51 OHM J	
579	R441	RD-4P0T0510J	RES-CF,RD 1/4W 51 OHM J	
580	R442	RD-4P0T0510J	RES-CF,RD 1/4W 51 OHM J	
581	R455	RD-4P0T0241J	RES-CF,RD 1/4W 240 OHM J	
582	R467	RD-4P0T0102J	RES-CF,RD 1/4W 1K OHM J	
583	R501	RD-8P0T0561J	RES-CF,RD 1/8W 560 OHM J	
584	R502	RD-8P0T0271J	RES-CF,RD 1/8W 270 OHM J	
585	R503	RD-8P0T0820J	RES-CF,RD 1/8W 82 OHM J	

NUM.	LOCATION	PART NUMBER	DESCRIPTION	REMARK
631	R550	RD-8P0T0103J	RES-CF,RD 1/8W 10KOHM J	
632	R601	RD-8P0T0102J	RES-CF,RD 1/8W 1K OHM J	
633	R602	RD-8P0T0333J	RES-CF,RD 1/8W 33K OHM J	
634	R603	RD-8P0T0102J	RES-CF,RD 1/8W 1K OHM J	
635	R604	RD-8P0T0101J	RES-CF,RD 1/8W 100 OHM J	
636	R605	RD-8P0T0153J	RES-CF,RD 1/8W 15K OHM J	
637	R606	RD-8P0T0473J	RES-CF,RD 1/8W 47K OHM J	
638	R607	RD-8P0T0333J	RES-CF,RD 1/8W 33K OHM J	
639	R608	RD-8P0T0683J	RES-CF,RD 1/8W 68K OHM J	
640	R609	RD-4P0T0824J	RES-CF,RD 1/4W 820K OHM J	
641	R610	RD-8P0T0224J	RES-CF,RD 1/8W 220KOHM J	
642	R611	RD-8P0T0472J	RES-CF,RD 1/8W 4.7K OHM J	
643	R612	RD-8P0T0821J	RES-CF,RD 1/8W 820 OHM J	
644	R613	RD-8P0T0222J	RES-CF,RD 1/8W 2.2K OHM J	
645	R614	RD-8P0T0104J	RES-CF,RD 1/8W 100K OHM J	
646	R615	RD-8P0T0152J	RES-CF,RD 1/8W 1.5K OHM J	
647	R616	RD-8P0T0152J	RES-CF,RD 1/8W 1.5K OHM J	
648	R617	RD-8P0T0822J	RES-CF,RD 1/8W 8.2K OHM J	
649	R618	RD-8P0T0103J	RES-CF,RD 1/8W 10KOHM J	
650	R619	RD-8P0T0393J	RES-CF,RD 1/8W 39K OHM J	
651	R620	RD-8P0T0153J	RES-CF,RD 1/8W 15K OHM J	
652	R621	RD-8P0T0473J	RES-CF,RD 1/8W 47K OHM J	
653	R622	RD-8P0T0563J	RES-CF,RD 1/8W 56K OHM J	
654	R623	RD-8P0T0103J	RES-CF,RD 1/8W 10KOHM J	
655	R624	RD-8P0T0472J	RES-CF,RD 1/8W 4.7K OHM J	
656	R625	RD-8P0T0184J	RES-CF,RD 1/8W 180K OHM J	
657	RP101	341130001002	POSISTOR,9OHM 3PIN +-10%	
658	RT101	E4207708409A	THERMISTOR 18OHM 13PAI TA	
659	SG401	3411100043	VARISTOR,S23 1500V 1500V	
660	SK401	E42043096010	CRT SOCKET,033-0-5500-4	
661	SW101	E42027035010	SWITCH PWR,1101A20TS-B	
662	SW301	E42027014010	LEVER SWITCH,30'C 3P	
663	SW501	E42027039010	SWITCH TACT,5MM 160GF VER	
664	SW502	E42027039010	SWITCH TACT,5MM 160GF VER	
665	SW503	E42027039010	SWITCH TACT,5MM 160GF VER	
666	SW504	E42027039010	SWITCH TACT,5MM 160GF VER	
667	SW505	E42027039010	SWITCH TACT,5MM 160GF VER	
668	SW506	E42027039010	SWITCH TACT,5MM 160GF VER	
669	SW507	E42027039010	SWITCH TACT,5MM 160GF VER	
670	SW508	E42027039010	SWITCH TACT,5MM 160GF VER	
671	T101	6130014100	EYELET,2.7PAI BRASS T=0.4	
672	T101	351020008501	TRAN-PW,EER3541 5854/7C	
673	T301	E42031123020	TRANS HDT,EI1916	
674	T601	6130014100	EYELET,2.7PAI BRASS T=0.4	
675	T601	3510500065	FBT,S560	

NUM.	LOCATION	PART NUMBER	DESCRIPTION	REMARK
676	T601	6120029000	SHLD-CASE,FENCE FBT 5854C	
677	T601	B4211008901A	SOLDER GRIP	
678	T601	6120028500	SHIELD FENCE FBT,L5854C	
679	T601	3540400006	MAG-FER,BFR180611N2NA	
680	T601	5004000187	SCR-TT2,BIN(+) MC 4*14	
681	T601	6261022100	RUBBER PCB,CR60-70 L4848F	
682	U101	UKA3842B	IC,CURRENT PWM CONTROLLER	
683	U102	ULM7805CT	IC,VOL REGULATOR,LM7805CT	
684	U201	M11143008012	SCREW,BIN(+) M3*8 MSZPC	
685	U201	3200000763	IC-LIN,TDA4866 SIP	
686	U201	6124030601	H-SINK MN(2 HOLES),L5854C	
687	U301	3200000945	IC-LIN,TDA4853 DIP	
688	U302	ULM358N	IC,OP-AMP LM358N	
689	U401	3200000777	IC-LIN,MC13281FYP DIP	
690	U402	3200001177	IC-LIN,LM2409 SIP	
691	U501	3205001205	IC-U,6017-N400HD-03AB DIP	
692	U502	U24LC04BP	IC,EEPROM 24LC04B-P	
693	VR101	E42015047090	V-SEMI,VERT 0.2W B10K TAP	
694	VR301	E42015047060	V-SEMI,VERT 0.2W B2K TAP	
695	VR401	E42015047120	V-SEMI,VERT 0.2W B50K TAP	
696	VR402	E42015047120	V-SEMI,VERT 0.2W B50K TAP	
697	VR403	E42015047120	V-SEMI,VERT 0.2W B50K TAP	
698	VR601	E42015047130	V-SEMI,VERT 0.2W B100K TA	
699	X501	E4402100117A	X-TAL,8MHZ TAPING HC-49U	
700	ZD101	DTUZ-18BSB	DIODE,ZENER UZ-18BSB	
701	ZD301	DTUZ-8.2BSB	DIODE,ZENER UZ-8.2BSB TAP	
702	ZD302	DTUZ-12BSB	DIODE,ZENER UZ-12BSB TAP	
703	ZD401	DTUZ-8.2BSB	DIODE,ZENER UZ-8.2BSB TAP	
704	ZD501	DTUZ-5.1BSB	DIODE,ZENER UZ-5.1BSB TAP	
705	ZD502	DTUZ-5.1BSB	DIODE,ZENER UZ-5.1BSB TAP	
706	ZD503	DTUZ-5.1BSB	DIODE,ZENER UZ-5.1BSB TAP	
707	ZD504	DTUZ-5.1BSB	DIODE,ZENER UZ-5.1BSB TAP	
708	ZD505	DTUZ-5.1BSB	DIODE,ZENER UZ-5.1BSB TAP	

Schematic Diagram

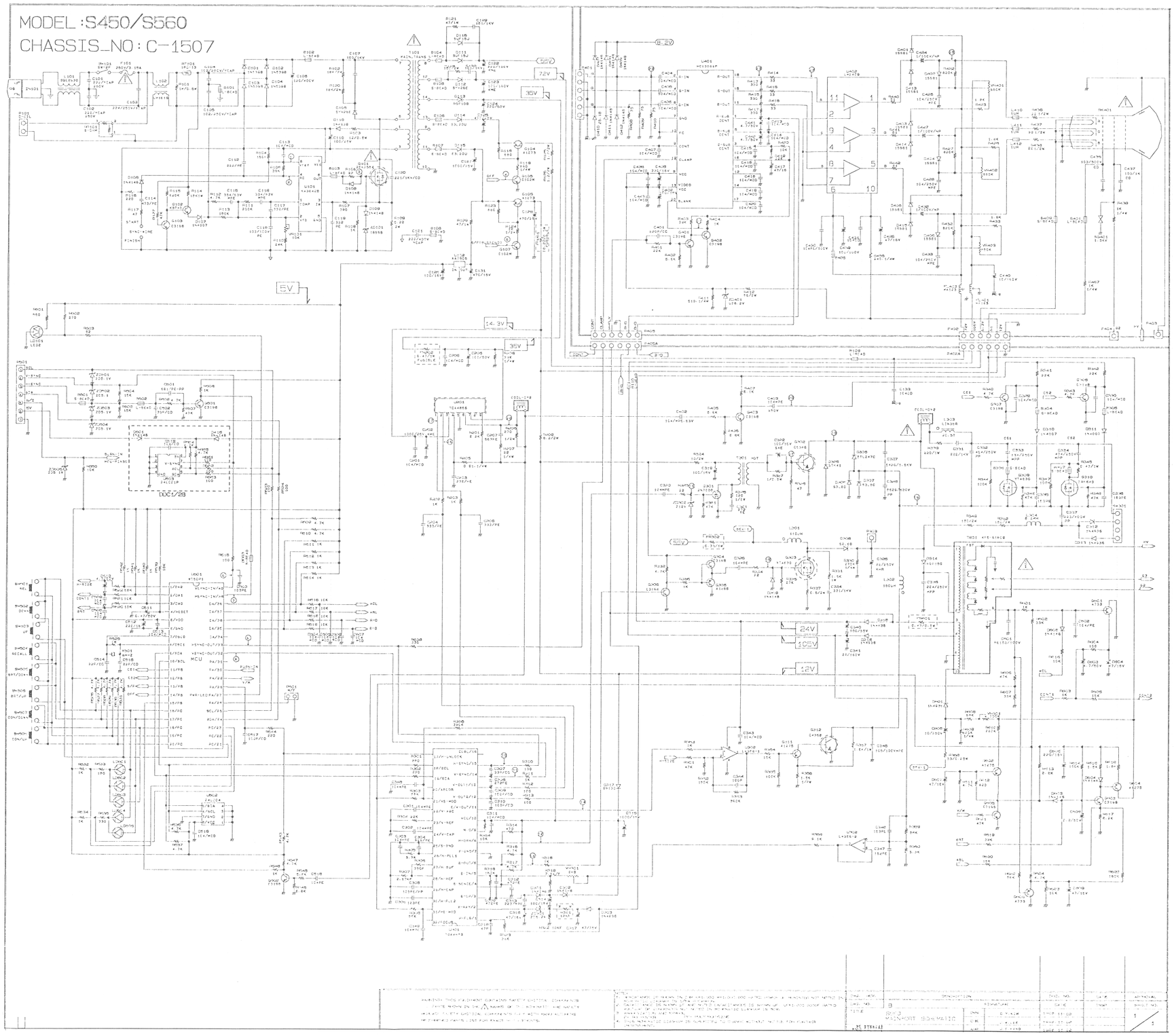

Wave Form

1-WAVE

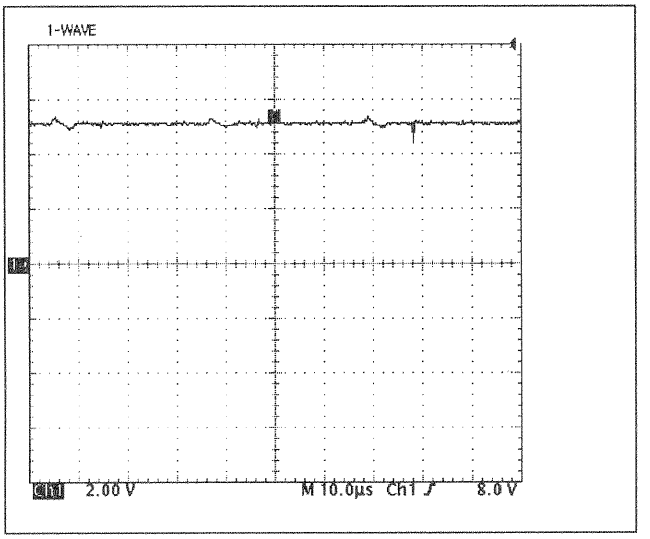

2-WAVE

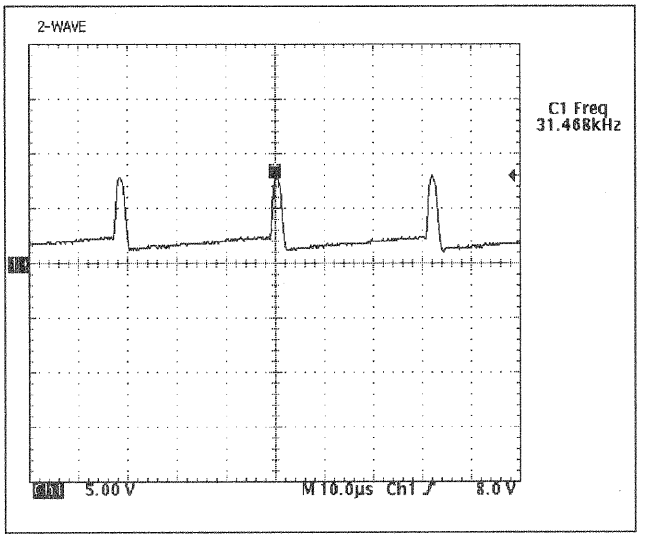

3-WAVE

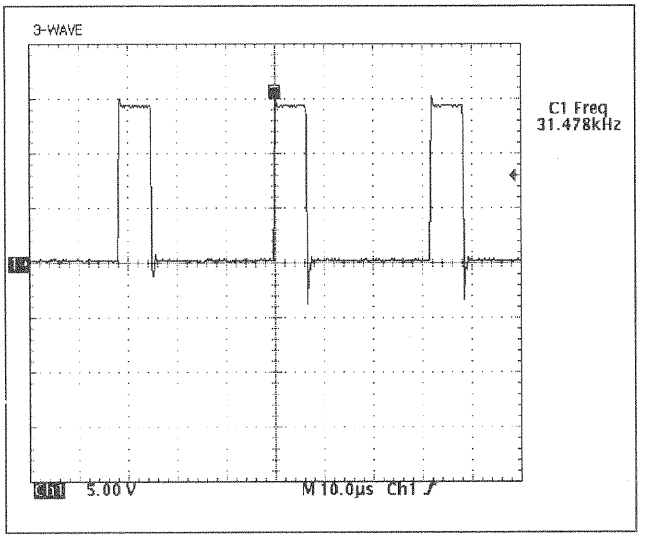

4-WAVE

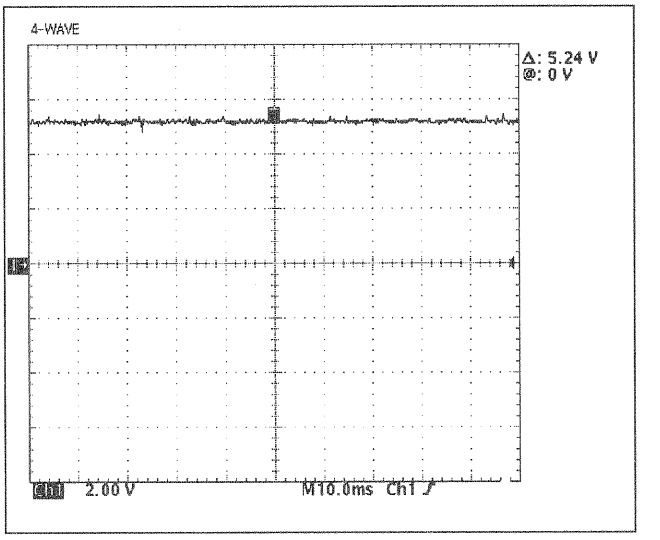

5-WAVE

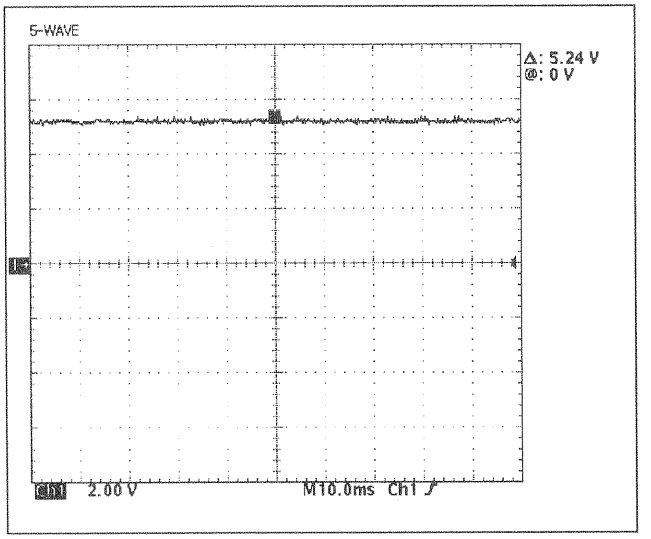

6-WAVE(V-SYNC INPUT)

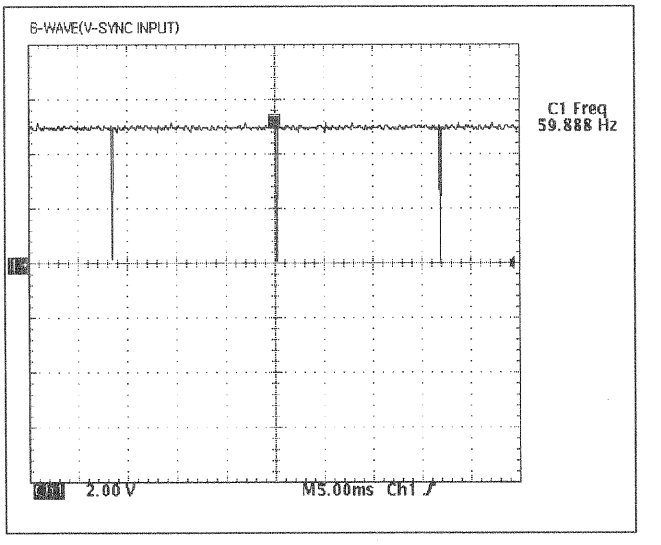

13-WAVE(U301-B+ OUTPUT)

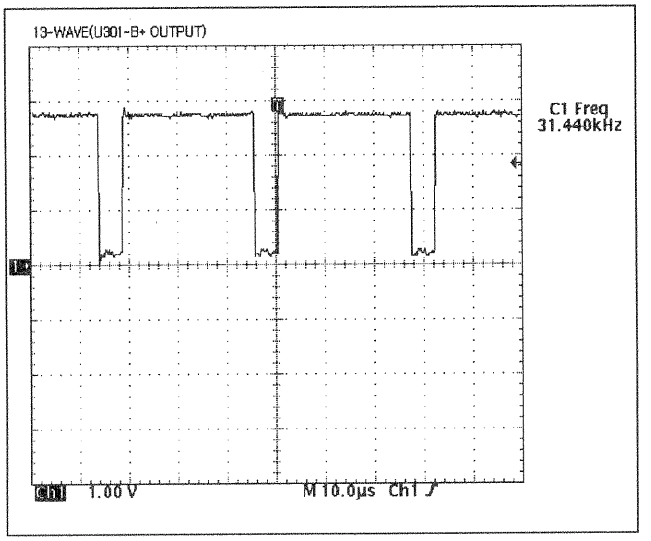

14-WAVE(U301-E/W OUTPUT)

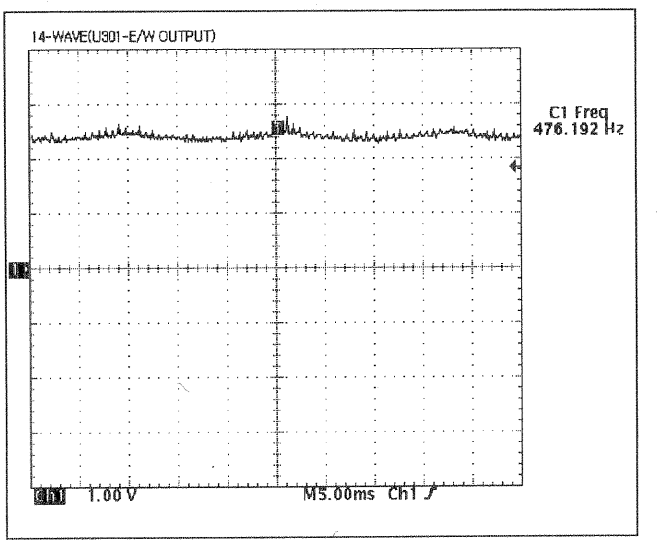

15-WAVE(Q303 GATE-B+DRV)

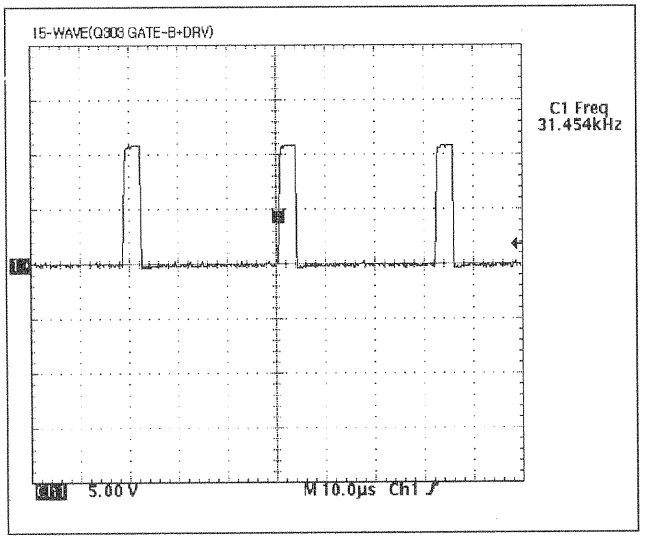

16-WAVE(Q301 GATE-HDRV)

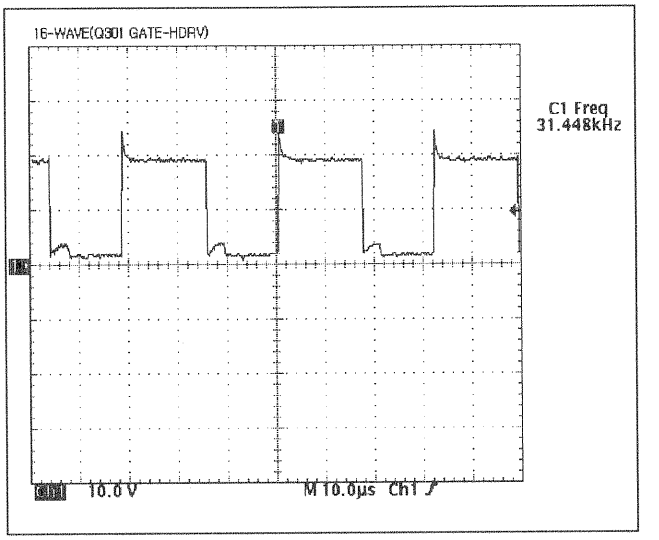

17-WAVE(Q302 GATE - HDRV)

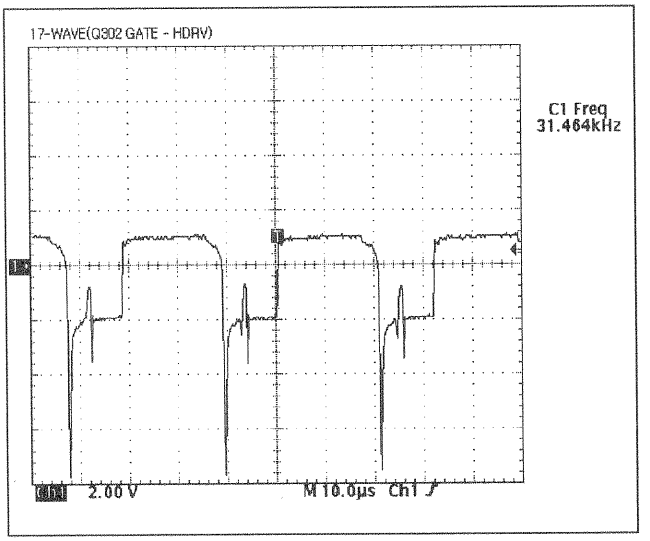

18-WAVE(Q302 COLLECTOR - VCP),*NOTE : USING OF 100:1 PROBE

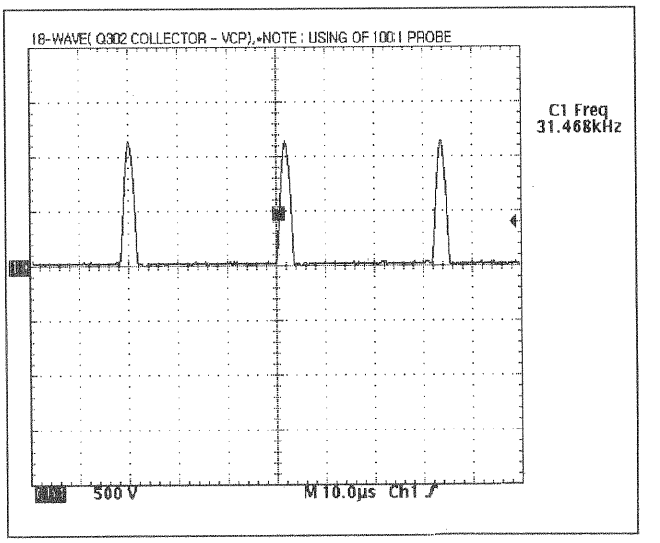

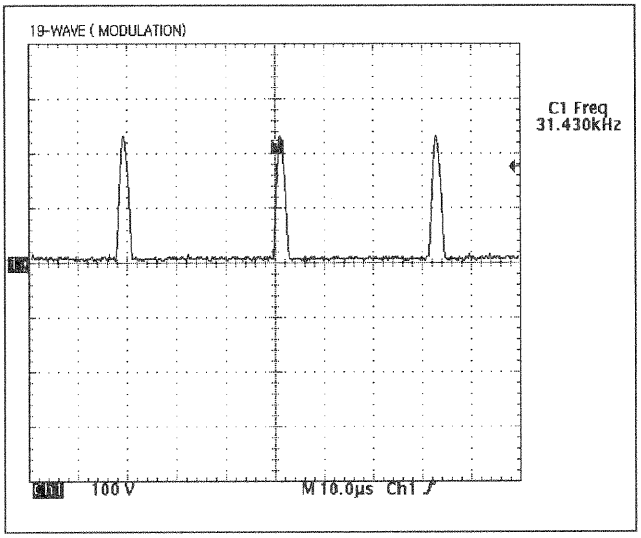
19-WAVE (MODULATION)
C1 Freq
31.430kHz
100 V
M 10.0µs Ch1

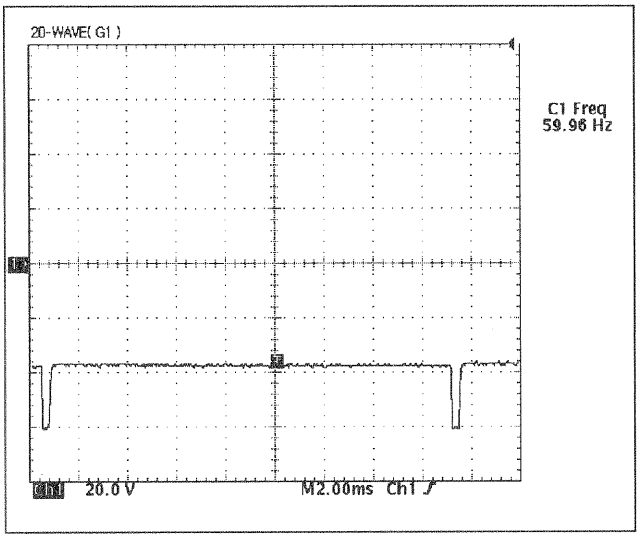
20-WAVE(G1)
C1 Freq
59.96 Hz
20.0 V
M2.00ms Ch1

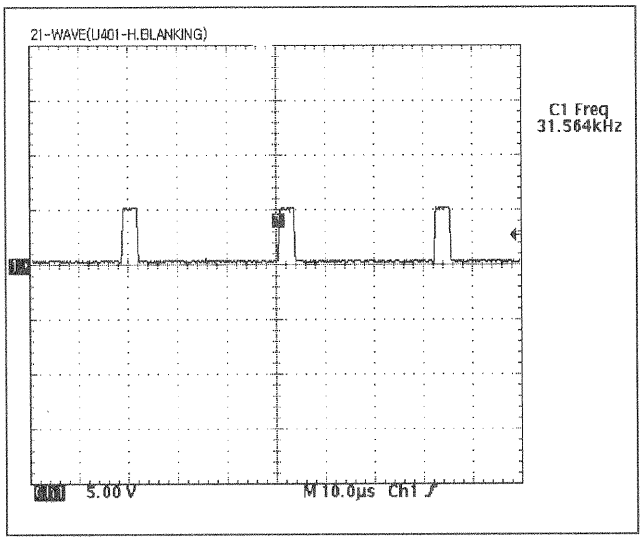
21-WAVE(U401-H.BLANKING)
C1 Freq
31.564kHz
5.00 V
M 10.0µs Ch1

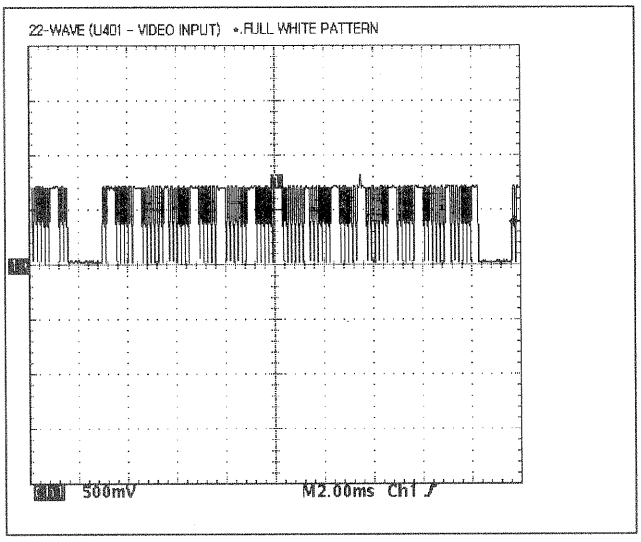
22-WAVE (U401 - VIDEO INPUT) *.FULL WHITE PATTERN
500mV
M2.00ms Ch1

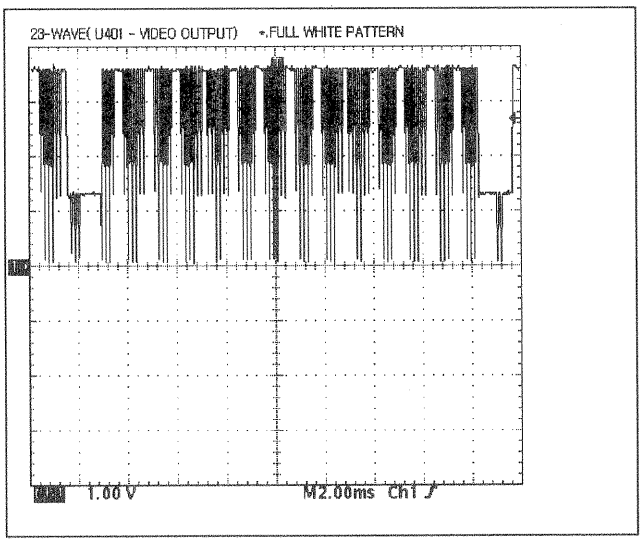
23-WAVE(U401 - VIDEO OUTPUT) *.FULL WHITE PATTERN
1.00 V
M2.00ms Ch1

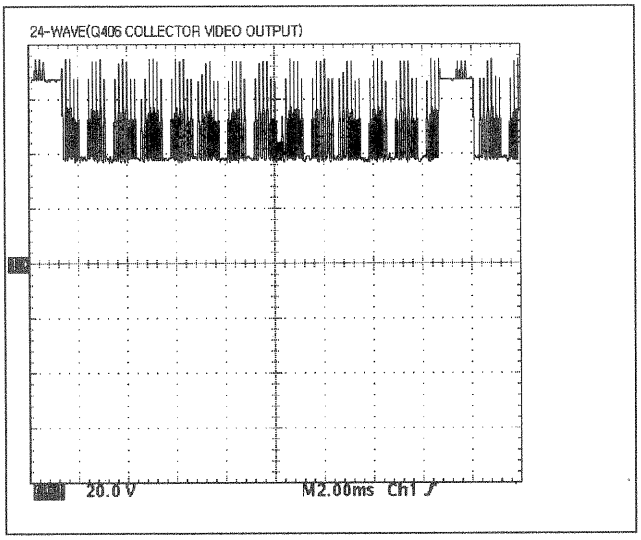
24-WAVE(Q406 COLLECTOR VIDEO OUTPUT)
20.0 V
M2.00ms Ch1

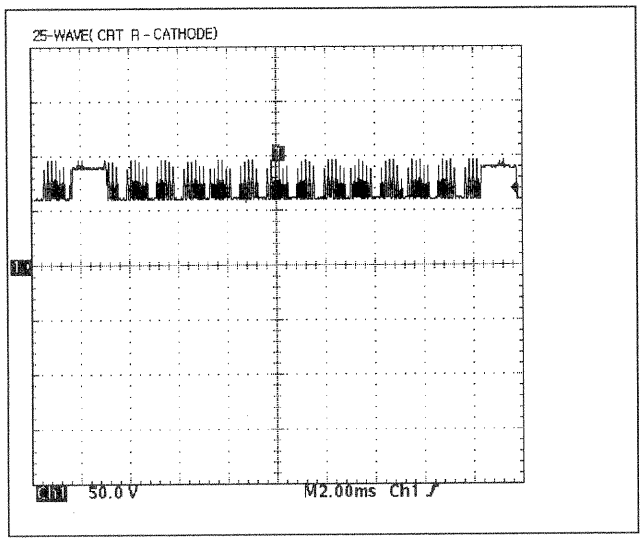
25-WAVE(CRT R - CATHODE)
Ch1 50.0 V
M2.00ms Ch1

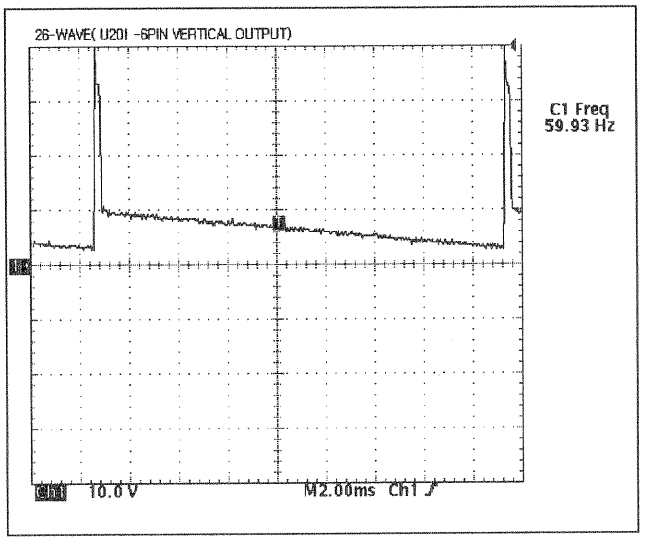
26-WAVE(U201 -6PIN VERTICAL OUTPUT)
C1 Freq
59.93 Hz
Ch1 10.0 V
M2.00ms Ch1

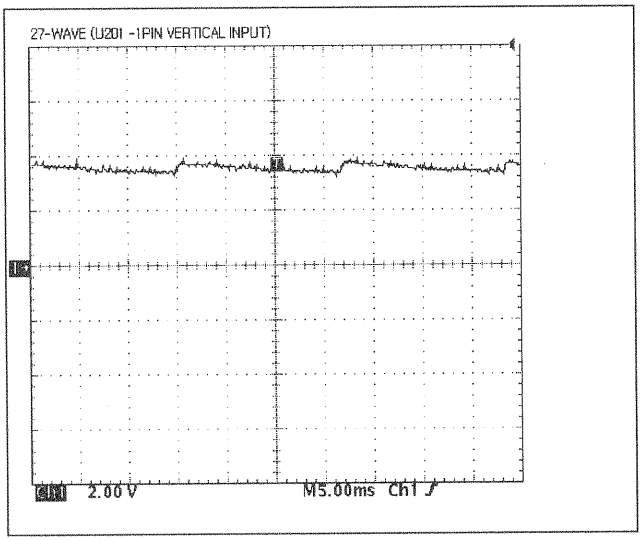
27-WAVE (U201 -1PIN VERTICAL INPUT)
Ch1 2.00 V
M5.00ms Ch1

PCB Layout

- MAIN + CRT Component Side

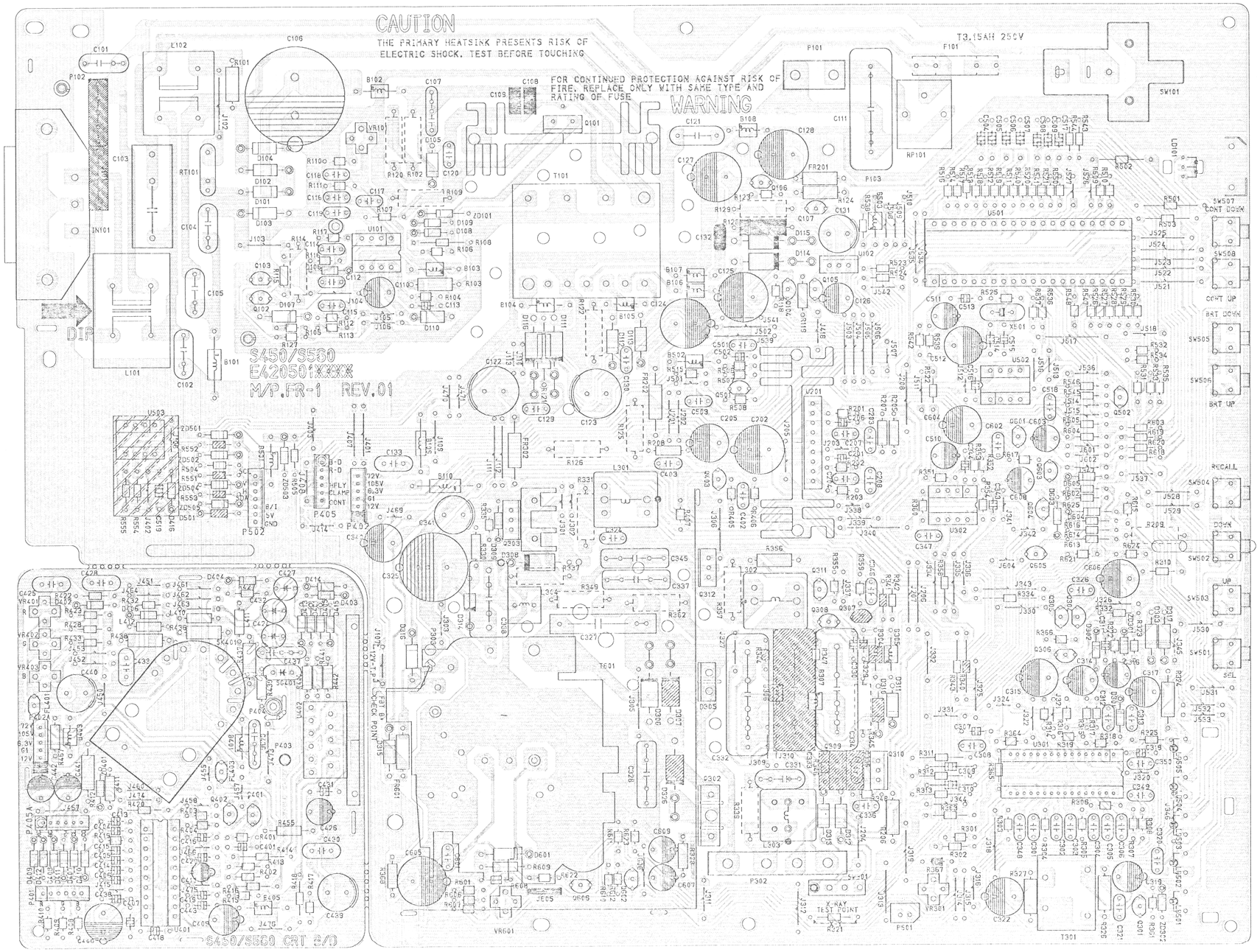

Exploded View

- S450

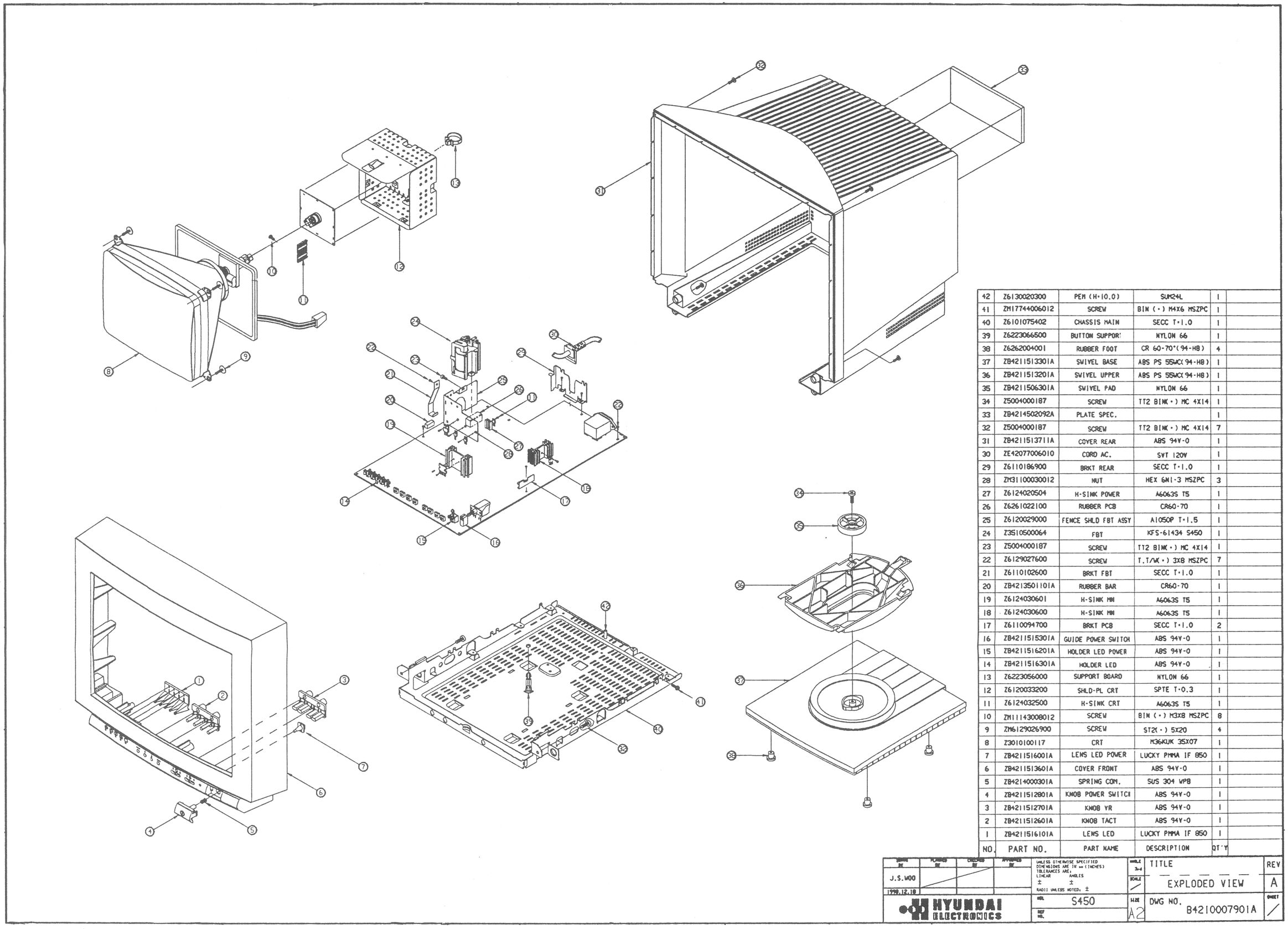

NO.	PART NO.	PART NAME	DESCRIPTION	QTY
42	Z6130020300	PEM (H=10.0)	SUM24L	1
41	ZM17744006012	SCREW	BIN (-) M4X6 MSZPC	1
40	Z6101075402	CHASSIS MAIN	SECC T=1.0	1
39	Z6223066500	BUTTON SUPPORT	NYLON 66	1
38	Z6262004001	RUBBER FOOT	CR 60-70°(94-HB)	4
37	ZB4211513301A	SWIVEL BASE	ABS PS 55WC(94-HB)	1
36	ZB4211513201A	SWIVEL UPPER	ABS PS 55WC(94-HB)	1
35	ZB4211506301A	SWIVEL PAD	NYLON 66	1
34	Z5004000187	SCREW	TT2 BIN(-) MC 4X14	1
33	ZB4214502092A	PLATE SPEC.		1
32	Z5004000187	SCREW	TT2 BIN(-) MC 4X14	7
31	ZB4211513711A	COVER REAR	ABS 94V-0	1
30	ZE42077006010	CORD AC.	SVT 120V	1
29	Z6110186900	BRKT REAR	SECC T=1.0	1
28	ZM311000300012	NUT	HEX 6N1-3 MSZPC	3
27	Z6124020504	H-SINK POWER	A6063S T5	1
26	Z6261022100	RUBBER PCB	CR60-70	1
25	Z6120029000	FENCE SHLD FBT ASSY	A1050P T=1.5	1
24	Z3510500064	FBT	KFS-61434 S450	1
23	Z5004000187	SCREW	TT2 BIN(-) MC 4X14	1
22	Z6129027600	SCREW	T.T/W(-) 3X8 MSZPC	7
21	Z6110102600	BRKT FBT	SECC T=1.0	1
20	ZB4213501101A	RUBBER BAR	CR60-70	1
19	Z6124030601	H-SINK MN	A6063S T5	1
18	Z6124030600	H-SINK MN	A6063S T5	1
17	Z6110094700	BRKT PCB	SECC T=1.0	2
16	ZB4211515301A	GUIDE POWER SWITCH	ABS 94V-0	1
15	ZB4211516201A	HOLDER LED POWER	ABS 94V-0	1
14	ZB4211516301A	HOLDER LED	ABS 94V-0	1
13	Z6223056000	SUPPORT BOARD	NYLON 66	1
12	Z6120033200	SHLD-PL CRT	SPTE T=0.3	1
11	Z6124032500	H-SINK CRT	A6063S T5	1
10	ZM111430008012	SCREW	BIN(-) M3X8 MSZPC	8
9	ZM6129026900	SCREW	ST2(-) 5X20	4
8	Z3010100117	CRT	M36KUK 35X07	1
7	ZB4211516001A	LENS LED POWER	LUCKY PMMA IF 850	1
6	ZB4211513601A	COVER FRONT	ABS 94V-0	1
5	ZB4214000301A	SPRING COM.	SUS 304 WPB	1
4	ZB4211512801A	KNOB POWER SWITCH	ABS 94V-0	1
3	ZB4211512701A	KNOB YR	ABS 94V-0	1
2	ZB4211512601A	KNOB TACT	ABS 94V-0	1
1	ZB4211516101A	LENS LED	LUCKY PMMA IF 850	1

DRAWN BY: J.S.WOO	CHECKED BY	APPROVED BY	UNLESS OTHERWISE SPECIFIED DIMENSIONS ARE IN mm (INCHES) TOLERANCES ARE: LINEAR ± ANGLES ± RADII UNLESS NOTED, ±
1998.12.10			
HYUNDAI ELECTRONICS			MODEL S450
SCALE 3=4	TITLE: EXPLODED VIEW		REV A
SIZE A2	DWG NO. B42100079O1A		SHEET 1

• S560

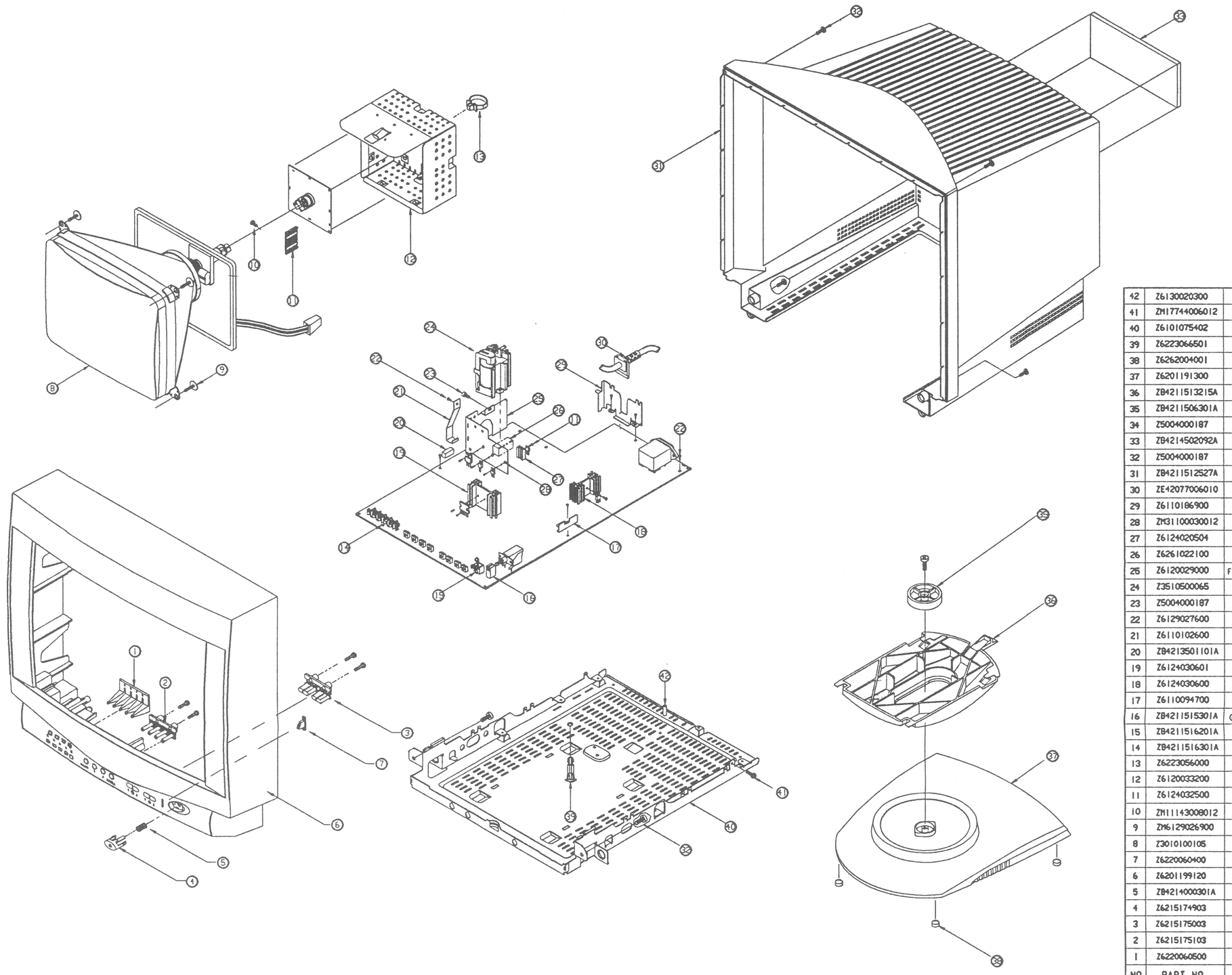

NO.	PART NO.	PART NAME	DESCRIPTION	QT'Y	
42	Z6130020300	PEM (H=10.0)	SUM24L	1	
41	ZM17744006012	SCREW	BIN (+) M4X6 MSZPC	1	
40	Z6101075402	CHASSIS MAIN	SECC T=1.0	1	
39	Z6223066501	BUTTON SUPPORT	NYLON 66	1	
38	Z6262004001	RUBBER FOOT	CR 60-70°(94-HB)	4	
37	Z6201191300	SWIVEL BASE	ABS PS 55WC(94-HB)	1	
36	ZB4211513215A	SWIVEL UPPER	ABS PS 55WC(94-HB)	1	
35	ZB4211506301A	SWIVEL PAD	NYLON 66	1	
34	Z5004000187	SCREW	TT2 BIN(+) MC 4X14	1	
33	ZB4214502092A	PLATE SPEC.		1	
32	Z5004000187	SCREW	TT2 BIN(+) MC 4X14	7	
31	ZB4211512527A	COVER REAR	ABS 94V-0	1	
30	ZE42077006010	CORD AC.	SVT 120V	1	
29	Z6110186900	BRKT REAR	SECC T=1.0	1	
28	ZM31100030012	NUT	HEX 6N1-3 MSZPC	3	
27	Z6124020504	H-SINK POWER	A6063S T5	1	
26	Z6261022100	RUBBER PCB	CR60-70	1	
25	Z6120029000	FENCE SHLD FBT ASSY	A1050P T=1.5	1	
24	Z3510500065	FET	KFS-61434 S560	1	
23	Z5004000187	SCREW	TT2 BIN(+) MC 4X14	1	
22	Z6129027600	SCREW	T.T/W(+) 3X8 MSZPC	7	
21	Z6110102600	BRKT FBT	SECC T=1.0	1	
20	ZB4213501101A	RUBBER BAR	CR60-70	1	
19	Z6124030601	H-SINK MN	A6063S T5	1	
18	Z6124030600	H-SINK MN	A6063S T5	1	
17	Z6110094700	BRKT PCB	SECC T=1.0	1	
16	ZB4211515301A	GUIDE POWER SWITCH	ABS 94V-0	1	
15	ZB4211516201A	HOLDER LED POWER	ABS 94V-0	1	
14	ZB4211516301A	HOLDER LED	ABS 94V-0	1	
13	Z6223056000	SUPPORT BOARD	NYLON 66	1	
12	Z6120033200	SHLD-P. CRT	SPTE T=0.3	1	
11	Z6124032500	H-SINK CRT	A6063S T5	1	
10	ZM11143008012	SCREW	BIN (+) M3X8 MSZPC	8	
9	ZM6129026900	SCREW	ST2(+) 5X20	4	
8	Z3010100105	CRT	M3600AW351X111 5857	1	
7	Z6220060400	LENS LED POWER	LUCKY PMMA IF 850	1	
6	Z6201199120	COVER FRONT	ABS 94V-0	1	
5	ZB4214000301A	SPRING COM.	SUS 304 WPB	1	
4	Z6215174903	KNOB POWER	ABS 94V-0	1	
3	Z6215175003	KNOB VR	ABS 94V-0	1	
2	Z6215175103	KNOB TACT	ABS 94V-0	1	
1	Z6220060500	LENS LED	LUCKY PMMA IF 850	1	

DRAWN BY	PLANNED BY	CHECKED BY	APPROVED BY	UNLESS OTHERWISE SPECIFIED DIMENSIONS ARE IN mm (INCHES) TOLERANCES ARE: LINEAR ± ANGLES ± RADII UNLESS NOTED: ±	ANGLE 3rd	TITLE	REV
J.S.WOO					SCALE /	EXPLODED VIEW	A
1999.02.01							
HYUNDAI ELECTRONICS				MODEL S560	SIZE A2	DWG NO. B4210008001A	SHEET /