HITACHI

TP | No.0004E

C1420VT Series

SERVICE MANUAL
Wartungsanleitung
Documentation Technique

HITA-02915

C1420VT-311

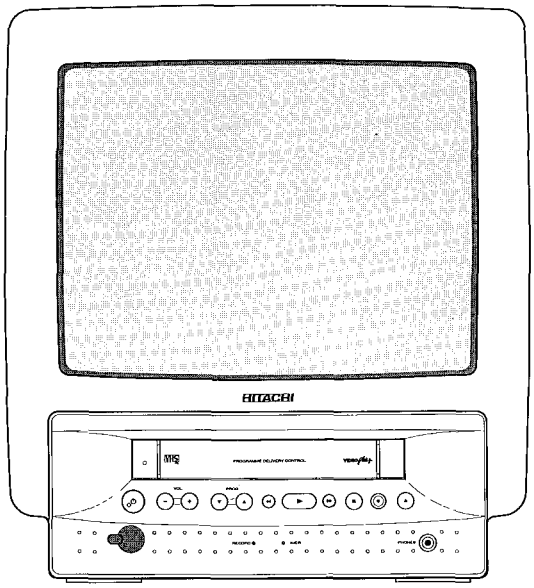

VHS

This video deck is a VHS type video recorder. For proper operation, only the VHS type cassette must be used.

VHS

Dieser Video-Recorder entspricht dem VHS-Format. Für richtigen Betrieb müssen daher VHS-Magnetband-Casseten verwendet werden.

VHS

Cet appareil est un magnétoscope format VHS. Pour un fonctionnement optimal n'utiliser que des cassettes VHS.

SPECIFICATIONS AND PARTS ARE SUBJECT TO CHANGE FOR IMPROVEMENT
Änderungen der Technischen Daten und Teile im Sinne ständiger Verbesserung vorbehalten.
A des fins d'amélioration, les spécifications et les pièces sont sujets à modifications.

VIDEO CASSETTE RECORDER
Video-Cassettenrecorder
Magnétoscope à cassette

PCS 77341

January 1997 HITACHI HOME ELECTRONICS EUROPE

TABLE OF CONTENTS

Front page 1-1
Table of contents 1-2
Survey of features and boards 1-3
Technical data - Safety instructions 1-4

I. SUMMARY
A. Description of controls and connections 1-6
B Service and caution notes 1-8

II. ADJUSTMENT PROCEDURES
A. Mechanical adjustment procedures 2-1
1. Dismantling cabinet parts 2-1
2. Procedure for cleaning the head drum 2-4
3. Adjustment procedures 2-5

B Service tools and fixtures 2-19

C. Circuit description 2-21

D. Electrical adjustment procedures 2-35
1. Test equipment 2-35
2. How to read the adjustment procedures 2-35
3. Adjustment procedures 2-36

III. SCHEMATICS
Interconnection wiring diagram 3-1

Large signal and TV part - Block diagram 3-2
I/O, video processing; audio processing and
head amplifier - Block diagram 3-3
Deck electronics and control - Block diagram 3-4

Large signal board (GSPD14)
Schematic diagram 3-5
CRT board (GSPD14)
Schematic diagram 3-6

Small signal board I (KSMDMx) - Tuner/TV/Demodulator (TV)
Schematic diagram 3-7
Small signal board II (KSMDMx) - Video processing (VS)
Schematic diagram 3-8
Small signal board III (KSMDMx) - Teletext (TXT)
Schematic diagram 3-9
Sensor print - Keyboard
Schematic diagram 3-10
Small signal board IV (KSMDMx) - Deck electronics (DE)
Schematic diagram 3-11
Small signal board V (KSMDMx) - Control (CO)
Schematic diagram 3-12
Small signal board VI (KSMDMx) - Audio processing (AL)
Schematic diagram 3-13
Small signal board VII (KSMDMx) - I/O switching (I/O)
Schematic diagram 3-14
Small signal board (KSMDMx) VIII- Tuner 2 (TU2)
Schematic diagram 3-15
Head amplifier (OHA)
Schematic diagram 3-16

IV. CIRCUIT BOARD DIAGRAMS
Large signal board (GSPD14) 4-1
CRT board - Switch module (GSPD14) 4-2

Small signal board (KSMDMx) - copper side
TV - VS - DE - CO - TU2 - AL - TXT 4-3

Small signal board (KSMDMx) - components side
TV - VS - DE - CO - TU2 - AL - TXT 4-4

Sensor print & Keyboard Print 4-5
Head amplifier (OHA) 4-6
Wave form photographs 4-7

V. EXPLODED VIEWS AND PARTS LIST
1 Deck exploded view (top) 5-1
2. Deck exploded view (bottom) 5-2
3 Mechanical parts list 5-3
4 Chassis frame exploded view 5-4
5. Electrical parts list 5.5

SURVEY OF FEATURES

C1420VT-311	
•	TUBE 14"
•	PAL I
•	1 TUNER
•	MONO SOUND
•	1 LOUDSPEAKER
•	2 VIDEO HEADS
•	VIDEO LONG PLAY PAL (8H)
•	NTSC PLAYBACK IN COLOR (SP - LP - SLP)
•	CHILD LOCK
•	GEMSTAR VIDEO+
•	VPS
•	PDC
•	TRANSMITTER IDENTIFICATION VIA VPS/PDC
•	TELETEXT
•	ACI (AUTO CABLE INSTALL)
•	OTR (ONE TOUCH RECORDING)
•	NON LINEAR COUNTER
•	HEADPHONES (3,5mm)
•	1 SCART (R-G-B INPUTS)

SURVEY OF THE BOARDS

C1420VT-311	
	LARGE SIGNAL BOARD
•	GSPD14
	SMALL SIGNAL BOARD
•	KSMDM1/ILPPVX
	KEYBOARD
•	PCKB1
	HEAD AMPLIFIER
•	OHA2/0LP
	TAPE DECK
•	WDB-P2/0LP

(I) Avvertimenti

• Le prescrizioni di sicurezza richiedono che l'apparecchio sia ricondotto alle condizioni originali e che siano usati ricambi originali. Componenti di sicurezza sono marcati con ⚠

• Tutti gli IC e semiconduttori sono sensibili a scariche elettrostatiche (ESD). Noncuranze durante la riparazione di semiconduttori possono danneggiarli o condurre ad una riduzione drastica della durata. Durante la riparazione assicurarsi di essere collegati allo stesso potenziale attraverso un bracciale di protezione contro scariche elettrostatiche. Inoltre tenere anche tutti i componenti e gli attrezzi a questo potenziale.
• Apparecchi da riparare bisogna collegarli sempre via un trasformatore isolante (separatore) alla tensione normale.
– Non scambiare moduli o altri componenti quando l'apparecchio è in funzione.
• Per l'accordo usare soltanto attrezzi di plastica (non usare attrezzi metallici). Cosí si evitano cortocircuiti e collegamenti instabili.

Osservazioni

• Misurare le tensioni continue e gli oscillogrammi riferiendosi alla massa dell'apparecchio
• Le tensioni continue e gli oscillogrammi indicati negli schemi di collegamento devono essere misurati secondo le condizioni seguenti: segnale barre colore, portante dell'immagine su· 503 25 MHz (C25).
• Gli oscillogrammi e le tensioni continue sono misurati in RECORD o PLAYBACK.
• I componenti indicati nelle liste sono intercambiabili con quelli nell'apparecchio nonostante l'eventuale denominazione di modelli.

(E) Avisos

• Las instrucciones de seguridad exigen que después de la reparación el aparato se encuentre en el estado original y que las piezas de repuesto, utilizadas para la reparación, sean idénticas a las originales.
Los componentes de seguridad estan marcados con ⚠

• Todos los IC y semiconductores son sensibles a descargas electrostáticas (ESD). Un tratamiento no conforme a las instrucciones de semiconductores en caso de reparación, podría llevar a la destrucción de estos componentes, o a una reducción drástica de la duración. Tenga cuidado de que, en caso de reparación, estar al mismo potencial que la masa del aparato, por una pulsera con resistencia. Ponga todos los componentes, herramientas y recursos al mismo potencial.
• Para reparar un aparato hay que conectarlo siempre a la alimentación a traves de un transformador de aislamiento.
• Cuando un aparato está en marcha no pueden ser cambiados módulos u otras piezas de repuesto.
• Para los ajustes hay que utilizar exclusivamente herramientas de plástico (nunca herramientas metálicas) Así se evitaran cortocircuitos y circuitos inestables.

Notas

• Hay que medir las tensiones continuas y los oscilogramas contra la masa del aparato.
• Las tensiones continuas y los oscilogramas mencionados en los esquemas tienen que ser medidos de manera siguiente: señal barra de color portadora de imagen en 503.25MHz (C25)
• Los oscilogramas y las tensiones continuas son medidas en „RECORD" y „PLAYBACK"
• Los componentes mencionados en las listas se los puede cambiar por los componentes en el aparato, a pesar de eventuales designaciones de tipos

---

(GB) TECHNICAL DATA	(D) TECHNISCHE DATEN	(F) CARACTERISTIQUES	
Mains voltage	Netzspannung	Tension secteur	196 - 265 V
Mains frequency	Netzfrequenz	Fréquence	45 - 65 Hz
Power consumption	Leistungsaufnahme	Puissance absorbée	48W
Ambient temperature	Raumtemperatur	Température ambiante	+10°C to +35°C
Relative humidity	Relative Luftfeuchtigkeit	Humidité relative	20 - 80 %
Dimensions	Abmessungen	Encombrement	365 x 402 x 360mm
Weight	Gewicht	Poids	13kg
Fast forward/rewind time	Vor-/Rückspulzeit	Temps (re-)bobinage	170s (E180)
Video resolution	Video-Auflösung	Résolution vidéo	>240 lines
Audio	Audio	Audio SP:	80Hz - 10kHz (±8dB)
		Audio LP:	80Hz - 5kHz (±8dB)

(NL) TECHNISCHE GEGEVENS	(E) DATOS TECNICOS	(I) DATI TECNICI	
Netspanning	Tensión de red	Tensione di alimentazione	196 - 265 V
Netfrequentie	Frecuencia de red	Frequenza di rete	45 - 65 Hz
Opgenomen vermogen	Consumo de potencia	Potenza assorbita	48W
Omgevingstemperatuur	Temperatura ambiente	Temperatura ambiente	+10°C to +35°C
Relatieve vochtigheid	Humedad relativa	Umiditá relativa	20 - 80 %
Afmetingen	Dimensiones	Dimensioni	365 x 402 x 360mm
Gewicht	Peso	Peso	13kg
Vooruit/terugspoeltijd	tiempo de (re-)bobinado	Tempo di (ri-)avvolgimento	170s (E180)
Opplossend vermogen	Resolución video	Risoluzione video	>240 lines
Audio	Audio	Audio SP:	80Hz - 10kHz (±8dB)
		Audio LP:	80Hz - 5kHz (±8dB)

(GB) Safety instructions

• Safety regulations demand that the set be restored to its original condition and that components identical with the original types be used.
Safety components are marked by the symbol ⚠

• All ICs and many other semi-conductors are susceptible to electrostatic discharges (ESD). Careless handling during repair may reduce life drastically. When repairing, make sure that you are conneted with the same potential as the mass of the set via a wrist wrap with resistance. Keep components and tools on the same potential.
• A set to be repaired should always be connected to the mains via a suitable isolating transformer.
• Never replace any modules or any other parts while the set is switched on.
• Use plastic instead of metal alignment tools. This in order to prelude short-circuit or to prevent a specific circuit from being rendered unstable.

Remarks

• The direct voltages and oscillograms ought to be measured relative to the set mass.
• The direct voltages and oscillograms mentioned in the diagrams ought to be measured with a colour bar signal and the picture carrier at 503.25 MHz (C25)
• The oscillograms and direct voltages have been measured in RECORD or PLAY mode.
• The semiconductors, which are mentioned in the circuit diagram and in the parts lists, are fully exchangeable per position with the semiconductors in the set, irrespective of the type designation of these semiconductors

(F) Avertissements

• Les normes de sécurité exigent qu'après réparation, l'appareil soit remis dans son état d'origine et que soient utilisées les pièces détachées d'origine.
Les composants de sécurité sont marqués ⚠

• Tous les circuits intégrés, ainsi que beaucoup d'autres semi-conducteurs, sont sensibles aux décharges statiques (ESD). Leur longévité pourrait être considérablement écourtée si aucune précaution n'est prise pendant leur manipulation. Lors de réparations, assurez vous de bien être relié au même potentiel que la masse de l'appareil et enfilez un bracelet serti d'une résistance de sécurité. Veiller à ce que les composants ainsi que les outils que vous utilisez soient également à ce potentiel
• Veiller à toujours alimenter un appareil à réparer à travers un transformateur d'isolement.
• Ne jamais remplacer de modules ni d'autres composants quand l'appareil est sous tension.
• Pour les réglages, utiliser des outils en plastique plutôt que des instruments métalliques; ceci afin d'éviter les court-circuits et d'exclure l'instabilité dans certains circuits.

Observations

• La mesure des tensions continues et des oscillogrammes doit se faire par rapport à la masse de l'appareil.
• Les tensions continues et les oscillogrammes figurant sur les schémas ont été relevés avec une mire de barre couleur modulée sur 503 25 MHz (C25).
• Les oscillogrammes et les tensions sont mesurés en mode ENREGISTREMENT ou LECTURE.
• Pour un repère donné, les composants indiqués dans la nomenclature sont complètement interchangeables avec ceux montés dans l'appareil, et ce quelles que soient les indications de type ou de désignation portées sur ces composants

(D) Sicherheitshinweise

• Die Sicherheitsvorschriften erfordern es, daß sich das Gerät nach der Reparatur in seinem originalen Zustand befindet und daß die zur Reparatur benutzten Ersatzteile mit den Originalersatzteilen identisch sind.
Sicherheits-Bauteile sind mit der Markierung ⚠ versehen.

• Alle IC's und Halbleiter sind empfindlich gegen elektrostatische Entladungen (ESD). Unvorschriftmässige Behandlung von Halbleitern im Reparaturfall kann zur Zerstörung dieser Bauteile oder zu einer drastischen Reduzierung der Lebensdauer führen Sorgen Sie dafür, daß Sie sich im Reparaturfall über ein Armband mit Widerstand auf dem gleichen Potential, wie die Masse des Gerätes befinden. Alle Bauteile, Werkzeuge und Hilfsmittel sind auf das gleiche Potential zu legen
• Ein zu reparierendes Gerät ist immer über einen Trenntransformator an die Netzspannung anzuschließen
• Bei eingeschaltetem Gerät dürfen keine Module oder sonstige Einzelteile ausgetauscht werden
• Zum Abgleich sind ausschließlich Kunststoffwerkzeuge zu benutzen (keine Metallwerkzeuge verwenden) Dadurch wird vermieden, daß ein Kurzschluß entstehen kann oder eine Schaltung instabil wird.

Anmerkungen

• Die Gleichspannung und Oszillogramme sind gegen Gerätemasse zu messen.
• Die Gleichspannungen und Oszillogramme angeführt in den Schaltbildern sollen unter folgenden Bedingungen gemessen werden: Farbbalkensignal, Bildträger auf 503 25 MHz (C25)
• Die Oszillogramme und Gleichspannungen sind in RECORD oder PLAY gemessen. Die in den Stücklisten aufgeführten Bauteile sind positionsweise voll auswechselbar gegen die Bauteile in dem Gerät, ungeachtet der etwaigen Typenbezeichungen

(NL) Veiligheidsinstructies

• Veiligheidsbepalingen vereisen, dat het apparaat in zijn oorspronkelijke toestand wordt teruggebracht en dat onderdelen, indentiek aan de oorspronkelijke, worden toegepast
De veiligheidsonderdelen zijn aangeduid met het symbool ⚠

• Alle IC's en vele andere halfgeleiders zijn gevoelig voor elektrostatische ontladingen (ESD) Onzorgvuldig behandelen tijdens reparatie kan de levensduur drastisch doen verminderen Zorg ervoor, dat U tijdens reparatie via een polsband met weerstand verbonden bent met hetzelfde potentiaal als de massa van het apparaat Houd componenten en hulpmiddelen ook op ditzelfde potentiaal.
• Sluit een apparaat dat gerepareerd wordt altijd via een scheidingstransformator aan op de netspanning
• Verwissel nooit modules of andere onderdelen terwijl het apparaat is ingeschakeld.
• Gebruik voor het afregelen plastic i p.v metalen gereedschap Dit om mogelijke kortsluiting te voorkomen of een bepaalde schakeling instabiel te maken.

Opmerkingen

• De gelijksspanningen en oscillogrammen dienen gemeten te worden ten opzichte van de apparaat aarde
• De gelijksspanningen en oscillogrammen vermeld in de schema's dienen gemeten te worden met een kleurbalkensignaal beelddraaggolf op 503 25 MHz (C25).
• De oscillogrammen en gelijksspanningen zijn in RECORD of PLAY mode gemeten.
• De halfgeleiders, die in het pricipeschema en in de stuklijsten, zijn vermeld, zijn per positie volledig uitwisselbaar met de halfgeleiders in het apparaat, ongeacht de typeaanduiding op deze halfgeleiders.

I. SUMMARY
A. DESCRIPTION OF CONTROLS AND CONNECTIONS

This section describes the controls of the set, its connections and the remote control.

C1420VT-311

The remote control

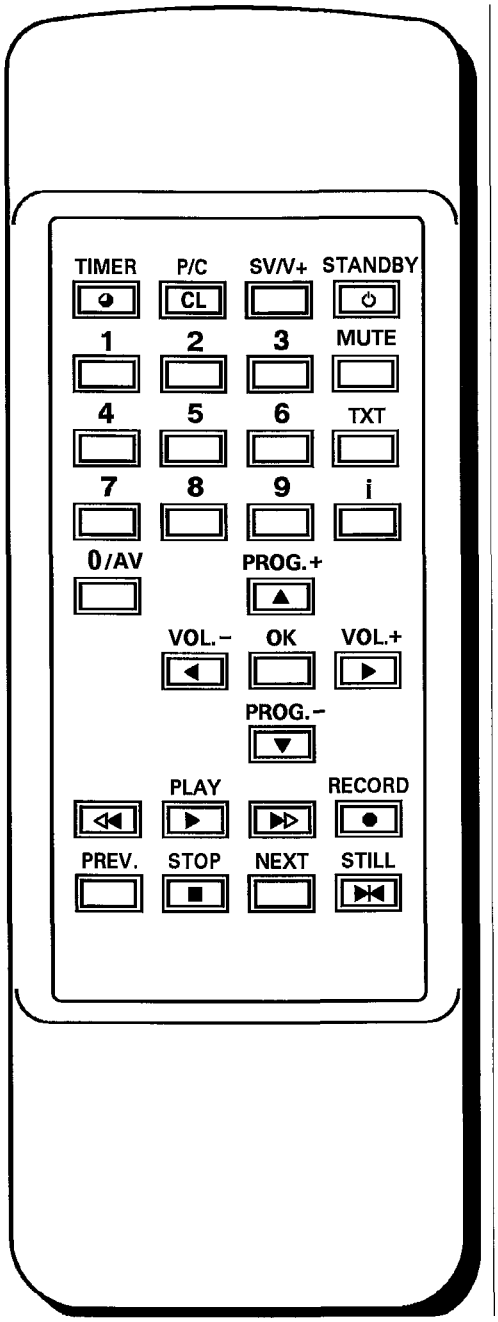

TIMER ⏲	TIMER programming on the VCR
P/C	Reset/clear
SV/V+	Programming with Show View
STANDBY ⏻	Standby
0/AV-9	Digit buttons 0-9 and A/V
MUTE	Mute
TXT	Teletext on/off
I	Menu
PROG +/-	Channel number +/-
VOL. +/-	Volume +/-
OK	Button of confirmation
◁◀	Rewind/ Reverse scanning
PLAY ▶	Play
▶▷	Wind/ Scanning forward
RECORD ●	Record
PREV.	Index search (previous)
STOP ■	Pause/Stop
NEXT	Index search (next)
STILL ▶◀	Still picture

Front view of the set

STANDBY ⏻	Standby	▶▶	Wind/ Scanning forward
VOL. +/-	Volume	■	Pause/Stop
PROG. ▲/▼	Channel number UP/DOWN	RECORD ●	Record
◀◀	Rewind/ Reverse scanning	EJECT ⏏	Eject
▶	Play	RECORD	Record LED
		TIMER	Timer LED
		🎧	Socket headphones

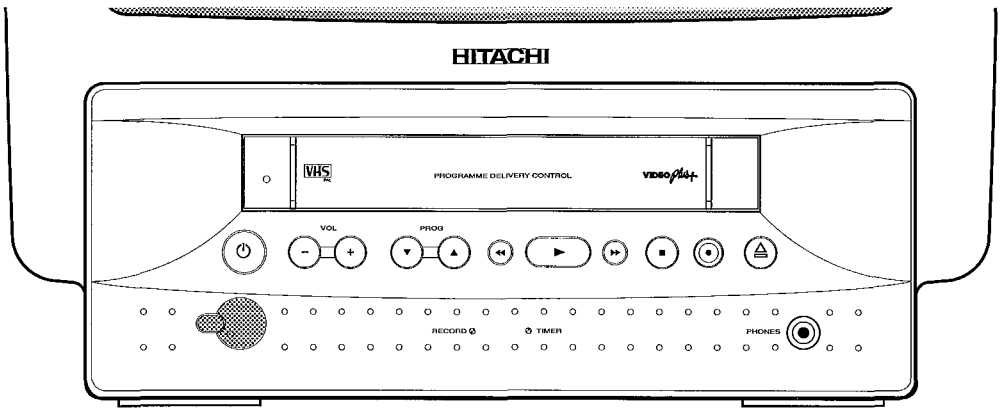

Rear view of the set

⊤⊤	Aerial input socket	ⓘ	Mains switch
EXTERNAL	Scart socket		

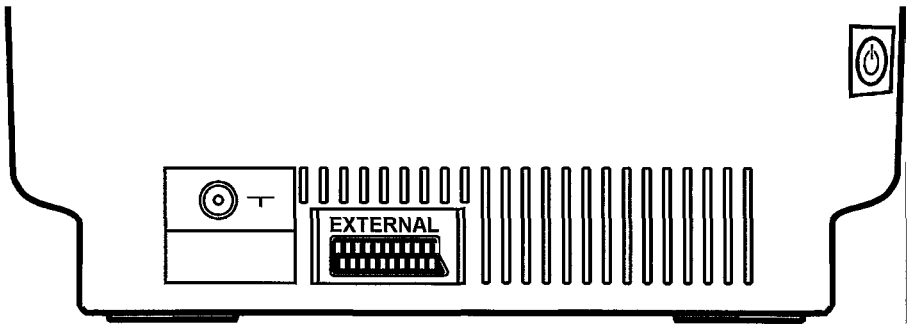

B. SERVICE AND CAUTION NOTES

When servicing, note the following items

A. Servicing the VCR section and the TV

A.1 Service position of the VCR unit

The service position is used to check and replace mechanical and electrical parts. Check the movement of mechanical parts of the mechanism chassis in this position and replace parts as necessary. To position the VCR unit for servicing (see fig. 1-1), use the following procedure:

1. Remove the back cover by removing 6 screws (19) (see fig. D2 page 2-2).
2. Remove 4 screws (12) (see fig. D3 page 2-2).
3. Disconnect connectors 1921, 1922 and 1923 on the Large signal board, connector 1967 on the CRT board as well as connector to the loudspeaker 1914; see fig. D3-D5 page 2-2.
4. Carefully pull out the VCR-Small signal board assembly from the set.
5. Remove the loudspeaker from the set.
6. To remove the shielding plate, remove 3 screws (31) (see fig. D4, page 2-2) and then remove 2 screws (12) (see fig. D8, page 2-3).
   The shielding plate can now be removed from the Small signal board by unhooking its legs at the bottom of the tape deck. Reconnect the tape deck outside the Small signal board using the deck extension cable kit.

CAUTION

- Leave the cables mounted on the tape deck side and connect the extension kit cables to the Small signal board.
- For Audio/CTL head, use the supplementary extension cable (see page 2-19).
- The tape deck must always be in the horizontal position!

Reconnect connectors 1921, 1922, 1923 and 1967 as well as the loudspeaker (see fig. 1-1).

A.2 Service position for the Large signal board

To bring the Large signal board in service position, proceed as follows:

1. Remove the back cover by removing 6 screws (19) (see fig. D2 page 2-2).
2. Remove 4 screws (12) (see fig. D3 page 2-2).
3. Disconnect connectors 1921, 1922, 1923, 1924 and 1925 from the Large signal board (see fig. D3-D5 page 2-2) and free the mains cord.
4. Pull the board towards the back and raise for removing.
5. Place the board behind the set on its legs (see fig. 1.2). Reconnect connectors 1921, 1922, 1923 and 1925.

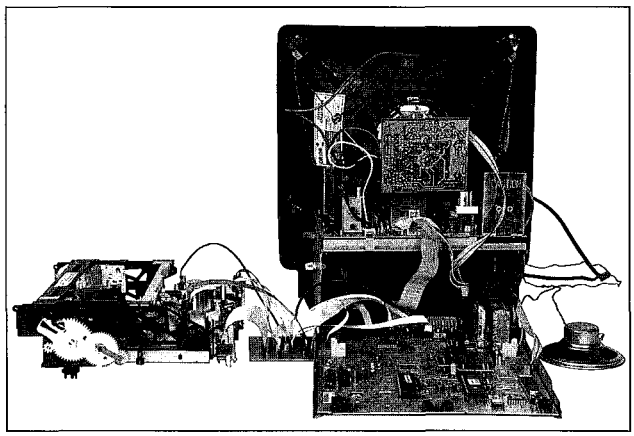

Fig. 1-1

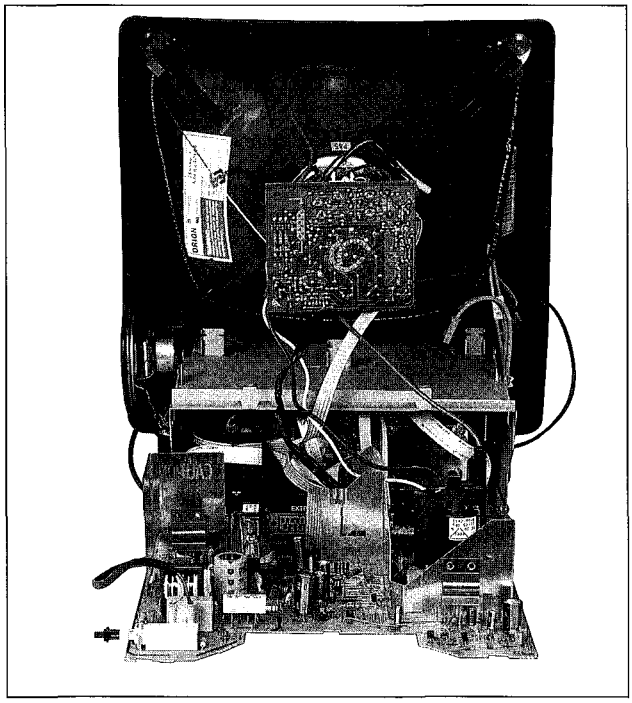

Fig. 1-2

B. Test point information

With this model, test pin or components leads are used as contact points for adjustment and checking. In case of other test points with no test pin or components leads, use the foil solder pad to connect the measuring equipment.

C. Removal or installation of flat cables

a. Removal
Pull out the flat cable, holding it securely to avoid damaging individual wires (see fig. 1-3).

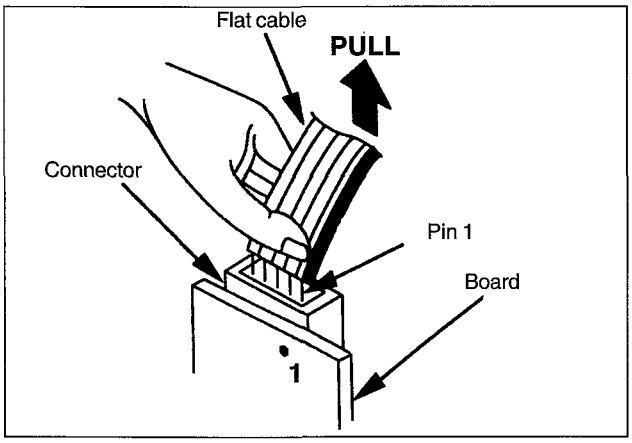

Fig. 1-3

b. Installation

1. Adjust the position of the flat cable so that the lines on the flat cable align with the pins X of the trap connector (see fig. 1-3).
2. Align individual wires with its individual trap connector hole. Then insert the flat cable wire into the trap connector.

CAUTION:
After installation, inspect the connection to insure that individual wires are not bent or touching other wires.

D. Method for manual VCR loading/unloading

Turn the pulley of the loading motor.

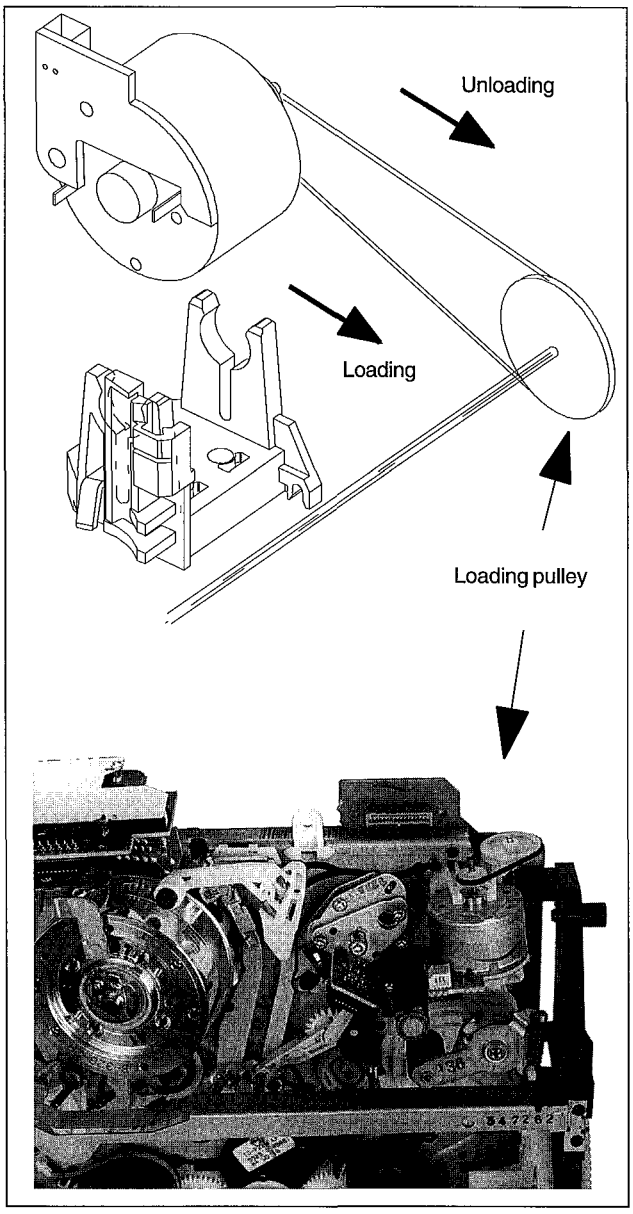

Fig. 1.4

```
SERVICE STATUS
INIT SWITCH                0
LOADING PULSE              0
TAPE BEGIN/END             0   1
RECORD PROTECT             0
REEL PULSE L/R             0   1
TAPE DECK STATUS           2 1 4
SERVICE CONTROL
µP: PTCM1-3Q  BTVD1-3P
```

Fig. 1-5

```
SERVICE CONTROL
RAM CLEAR
ERROR                  00   00   F0
ERROR STATUS           00   00   36
OPTIONS                     11962
GAP POSITION
HEAD HOURS                  0009
DISPLAY TUNER
 ▼   ▲                      CLEAR
```

Fig. 1-6

E. Service Mode

E.1 Introduction

A Service Test program (Service mode) has been included in the software of the microcalculators. It is divided into two separate OSD pages:

Service Status
This level allows the inspection of the tape deck status, the different sensors and the mask numbers of the Deck and Control µCs.
Validating the SERVICE CONTROL line offers access to the second page of the service mode.

Service Control
This level allows actions on the set's configuration as well as some adjustments. Moreover, the last 3 faults that occurred and the operating hours are displayed.

E.2 Activating the Service Mode

Simultaneously press the STOP key on the remote control and the PLAY key on the keyboard for at least 5 seconds to gain access to the Service mode.
The first page of the Service Mode is displayed as shown on fig. 1-5.

To gain access to the second page of this menu, validate the SERVICE CONTROL line using the OK or ▶ key on the remote control. The second page is then displayed as shown in fig. 1-6.

The Service Mode can be activated from any operating state of the VCR other than:
- Program search
- Installation
- Clock setting
- Cassette select

In the Service mode, all tape deck functions remain operational. To exit the Service Mode, press the STANDBY key or disconnect the set from the mains.

Note that it is possible to switch off the Service Mode's display by pressing MENU on the remote control; **but BEWARE** as in this case full functionality is not be recovered. To recover all functions, exit the Service mode completely (see above).

E.3 Monitoring the tape deck functions

If none of the following signals appear, the set tries to move the cassette holder into the EJECT position.

E.3.1 Loading/unloading duration

The loading/unloading duration control is controlled by the photo-transistor sensing the loading motor's rotations.

E.3.2 No left or right reel rotation

The right reel sensor (and left one in case of a Turbo deck) is used for this detection.

E.3.3 No head drum rotation

The PG/FG signal is used for this detection. It indicates the heads position as well as the rotation speed of the drum motor.

E.3.4 Capstan motor fault

This is detected by the FGD signal.

E.3.5 Function of the Init switch

The following diagram shows the Init switch status in relation to the tape deck position. The number of loading pulses (FTA) is important for a correct position of the tape deck.

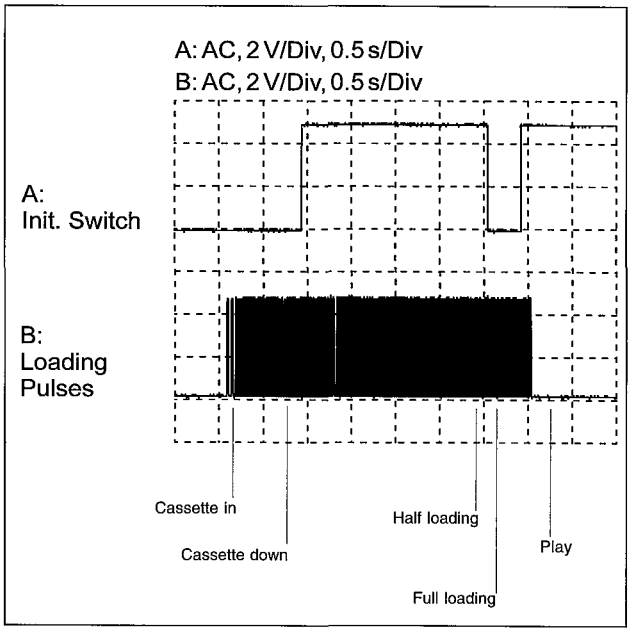

Fig. 1-7

E.3.6 Tape deck status

The following table indicates the TAPE DECK STATUS line value according to the deck position.

5	EJECT
6	
7	
8	
9	
100	STOP Tape Unloaded
101	
102	
212	PLAY Position
213	
214	
215	
216	
237	Reverse PLAY
238	
239	

Fig. 1-8

E.3.7 Erasing the EEPROM

The EEPROM stores all customer values (timer values, channel allocations) as well as some adjustments (gap position, picture related values...).
It can be useful to empty this memory. Move the cursor to the RAM CLEAR line and press the CLEAR key on the remote control.

The following will be erased from the EEPROM:
- All timer values
- All channel allocations

The following factory values for the TV part are downloaded from the Deck µC:
- Contrast
- Brightness
- Sharpness
- Color
- Volume

The following will be stored in the memory:
- The option code
- The operating hours
- The head switching point (gap adjustment)
- The deck status

CAUTION:
If the EEPROM has been changed, the VCR must be completely readjusted and reconfigured; only the TV related factory values will be downloaded when activating the RAM CLEAR line (see adjustment procedures; chapter 2).

E.3.8 Fault code

The last 3 faults that occurred in the set are stored in the EEPROM. The ERROR STATUS line tells the set status when the problem occurred. The ERROR line indicates the nature of problems. To erase them, move the cursor to the ERROR STATUS line and press the CLEAR key on the remote control.

Code	Error Status
0C	Standby
1 F	Fast play reverse (-3)
20	Lift up
21	Lift down
29	Still
2A	Fast play +2 or +3 (according to the mechadeck type)
2C	Picture search reverse
2D	Eject (ON)
2E	Picture search forward
2 F	Reverse play (-1)
30	Pause
31	Clear (tracking in the middle position)
32	Rewind
34	Wind
35	Play
36	Stop
37	Record
80	Stop beginning of tape
81	Stop end of tape
C5	Eject (Standby)

Code	Error
F0	Tape deck blocked
F1	Capstan motor blocked
F2	Tape cut
F3	Left reel blocked
F4	right reel blocked
F5	Drum motor blocked

Fig. 1-9

E.3.9 Option code

The option code is written on the type plate located on the set's back-cover. This 5 digit code defines the set capabilities. It is essential to have the right code according to the set version. It should only be set if the EEPROM has been changed. In this case move the cursor to the OPTION CODE line and enter the code related to your set. Validate this code by pressing the OK key on the remote control.

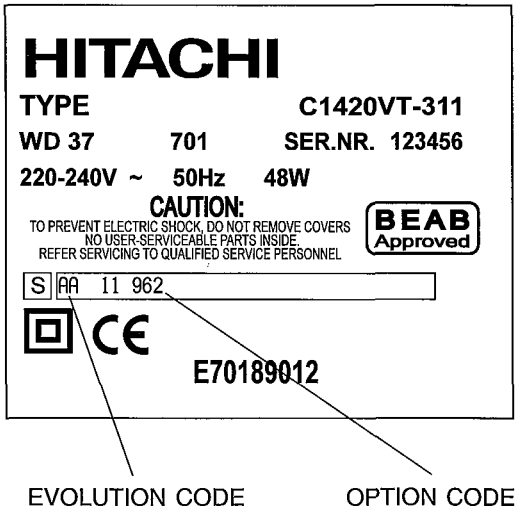

Fig. 1-10

E.3.10 Head switching point (Gap Position)

This must be adjusted after a head drum change. Please refer to chapter 2 "Electrical adjustment procedures" for details about this adjustment.

E.3.11 Operating hours counter

The counter indicates the running hours of the drum motor. To reset this counter, move the cursor to the HEAD HOURS line and press the CLEAR key on the remote control.

E.3.12 Second tuner display

For sets equipped with two tuners, it can be handy to be able to display the second tuner normally reserved for recording purposes. Move the cursor to the DISPLAY TUNER line and press the ▶ on the remote control. The VCR tuner picture is displayed on the screen. To switch back to Tuner 1 (TV) press again ▶ or switch off the set.

NOTES:

- If you change channels whilst the second tuner (VCR) is displayed, the picture may not be displayed as fine tuned. This is due to the fact that the AFC loop is deactivated in Service Mode. This problem will not appear if Tuner 1 (TV) is displayed. Once the Service Mode is left, the AFC is again active and the picture is then correct.
- If you play a cassette while Tuner 1 (TV) is selected, the Tuner 1 picture will be displayed on the TV screen.
- If you play a cassette while Tuner 2 (VCR) is selected, the cassette picture will be displayed on the TV screen.

F. Manual tracking

To exit the "Automatic tracking mode", insert a cassette, enter the PLAY mode and press the MENU key on the remote control. Using the ▼ key, go down to the SPECIAL line. Activate this line by pressing ▶. With ▼, go down to the TRACKING line. You can then modify the tracking value by pressing ▶ or ◀.
To return to the automatic tracking mode, eject the cassette and re-insert it.

G. How to move the cassette holder to the down position

To move the cassette holder in the down position without a cassette tape, use the following procedure.

1. Disconnect AC plug.
2. Remove the VCR unit from the set in the sequence described in the "dismantling cabinet parts" section (chapter 2).
3. Turn the loading pulley counterclockwise (front view) until the cassette compartment is locked by the right locking tab (fig. 1-11).
4. Clear the right locking tab by moving the lever forward (fig. 1-11).
5. Turn the loading pulley counterclockwise (front view) until the cassette compartment is locked by the left locking tab (fig. 1-11).
6. Clear the left locking tab by pressing down the lever (fig. 1-11).
7. Continue to turn the loading pulley until the cassette down position is obtained.

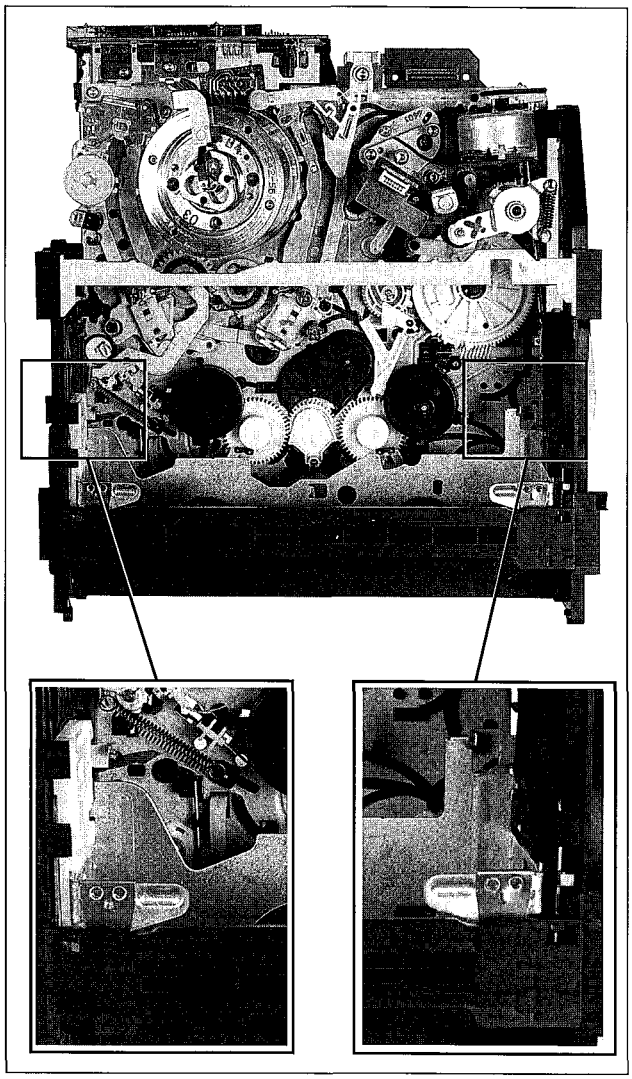

Fig. 1-11

H. How to remove the lift assembly

The lift can be removed and refitted in all deck positions with the exception of the "EJECT" position (the best position is: cassette compartment down, click stop).

To remove the cassette-up assembly.
- Free the holding bracket (fig. 1-12) by rotating it up and back from the upper end.
- Unscrew the 4 screws on the underside of the deck (fig. 1-13)
- Carefully remove the cassette-up assembly vertically, noting the position of the record protect operating lever (at top).

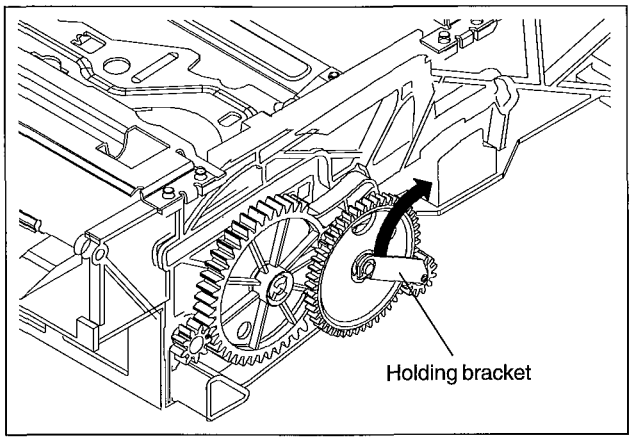

Fig. 1.12

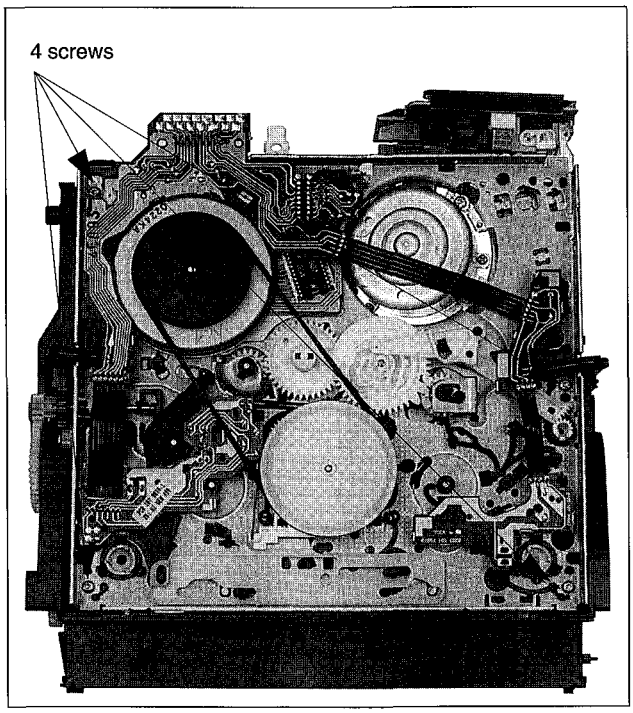

Fig. 1-13

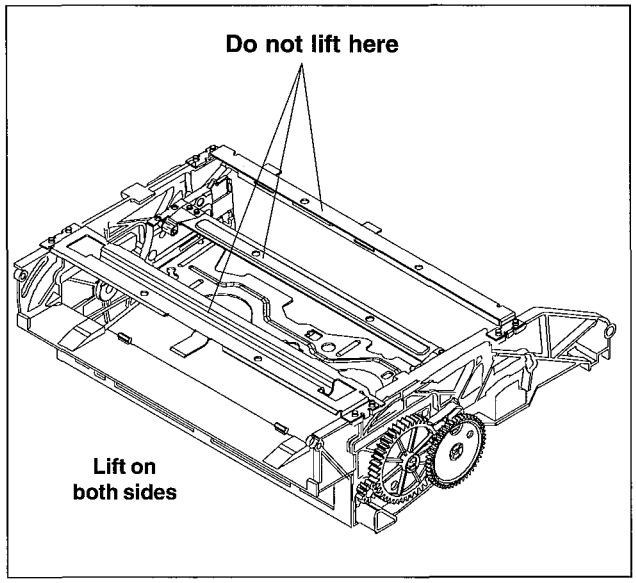

Fig. 1-14

I. Variable voltage isolation transformer

Because a hot chassis ground exists in the switched mode power supply circuit, an isolation transformer must be used. To have the option of increasing the input voltage slowly for troubleshooting, a variable isolation transformer is required for this type of power supply circuit.

J. Cleaning with 91% Isopropyl alcohol

All Isopropyl alcohol must be removed from the tape path after cleaning with a dry head cleaning stick as otherwise the tape could be damaged.

K. High voltage components

Avoid touching the following high voltage components:
- the CRT board
- the deflection yoke connections
- the anode cap
- transistors 7330 and 7583
- the terminals of the Flyback transformer.

L. Servicing the UHF/VHF tuner

As UHF/VHF tuners are pre-adjusted at the factory, do not try to adjust UHF/VHF tuner. The UHF/VHF tuner replacement part is only available as a complete assembly.

M. Remote control

The remote control replacement part is only available as a complete assembly. Do no try to dismantle the remote control. The battery cover plate is available as a separate spare part.

N. How to read the disassembly/assembly procedures

STEP LOC N°.	PART	REMOVAL FIGURE N°	REMOVAL UNLOCK / UNHOOK REMOVE / DISCONNECT UNSCREW	REMOVAL Note
1	Rear cover	D2	• 6 (19)	-
2	VCR unit	D3	• 4 (12) • Connectors: 1921, 1922, 1923, 1967, Loud-speaker(s)	1

STEP/ LOC N°.	START N°	PART		REMOVAL FIGURE N°	REMOVAL UNHOOK / UNLOCK RELEASE / UNPLUG	INSTALLATION ADJUSTMENT CONDITION N°
1	1	Pressure Roller	T	DM1, DM3		
2	1	Pressure Roller Guide	T	DM 3		
3	1	Cam Shaft	T	DM 3	s1	See § 10, Alignment Procedure, Top View 2 (page 2.18)

① ③ ⑤ ⑥ ① ② ③ ④ ⑤ ⑥ ⑦

Fig. 1-15

① Sequence
When reassembling, perform steps in reverse order.
These numbers are also used as the identification (location) no. of parts shown in the diagrams.

② Starting no. followed by the corresponding part which can be removed at this stage.

③ Part to be removed or installed.

④ Location of part.
T: Top B: Bottom

⑤ Figure no. showing procedure of part location.

⑥ Identification of part to be removed, unhooked, unlocked, released, unplugged, unsoldered etc.
P: Spring S: Screw

⑦ Adjustment information for installation.

O. Replacement procedure for leadless components (chip)

The following procedures are recommended for replacing leadless components used in this unit.

1. Preparation for replacement

a. Soldering iron
Use a pencil-type soldering iron that uses less than 30W.

b. Solder
Use Eutectic solder
(Tin 63%, Lead 37%)

c. Soldering time
Maximum 4 seconds.

Note:
a. Leadless components must not be re-used after removal.
b. Excessive mechanical stress and rubbing of the component electrode must be avoided.

2. Removing the leadless components

Grasp the leadless component body with tweezers and alternately apply heat to both electrodes. When the solder on both electrodes has melted, remove leadless component with a twisting motion.

Note:
a. Do not attempt to lift the component off the board until the component is completely disconnected from the board with a twisting motion.
b. Be careful not to break the copper foil on the printed circuit board.

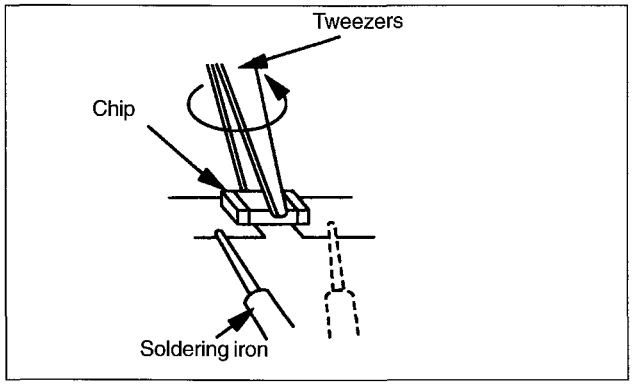

Fig. 1-17

3. Installation of leadless components

a. Presolder the contact points on the circuit board.

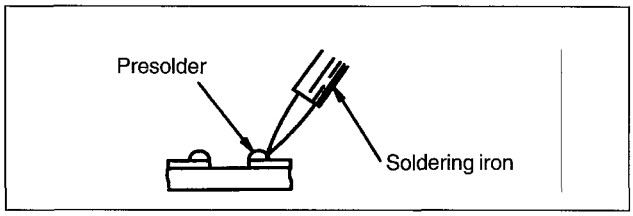

Fig. 1-18

b. Using tweezers press down the part and solder both electrodes as shown below.

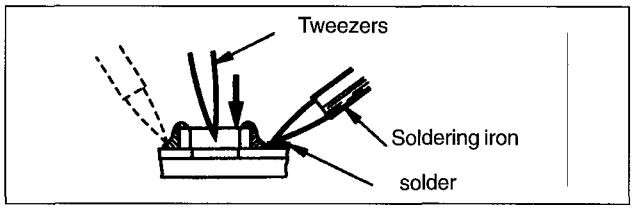

Fig. 1-19

Note:
Do not glue the replacement component to the circuit board.

P. How to remove/install the FLAT PACK IC

1. How to remove the Flat Pack IC

• Using a hot air Flat Pack IC unsoldering equipment

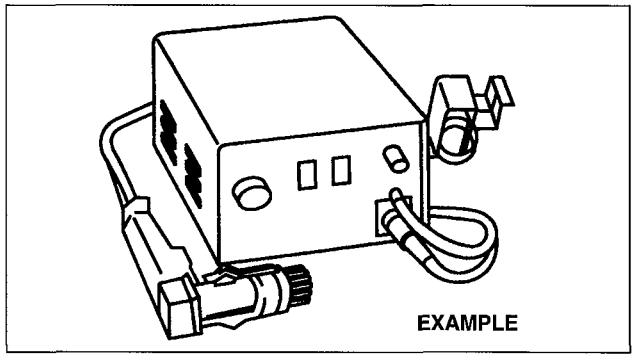

Fig. 1-20

a. Prepare the hot air Flat Pack IC unsoldering equipment. Then apply hot air to Flat Pack IC for 5 - 8 seconds.
b. Remove the Flat Pack IC with tweezers while applying the hot air.

CAUTION:
To avoid damage, do not apply the hot air to the chip parts around the Flat Pack IC for long periods.

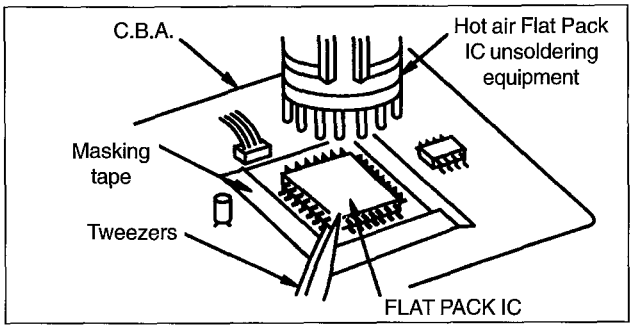

Fig. 1-21

Put masking tape around the Flat Pack IC to protect adjacent parts.

2 The Flat Pack IC is fixed to the P.C.B. with glue; therefore take care not to break or damage any foil under the IC or on each pin when removing it.

• Using a soldering iron

a. Use unsoldering braid to remove the solder from all pins of the Flat Pack IC.
Apply solder flux to all pins of the Flat Pack IC, to allow easy removal.

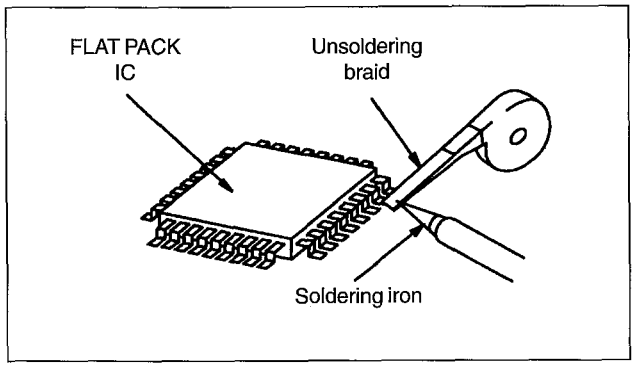

Fig. 1-22

b. Lift up each lead of the Flat Pack IC individually, using a sharp pin or non-solder wire (iron wire), while heating the pins using a fine tip soldering iron or a hot air blower.

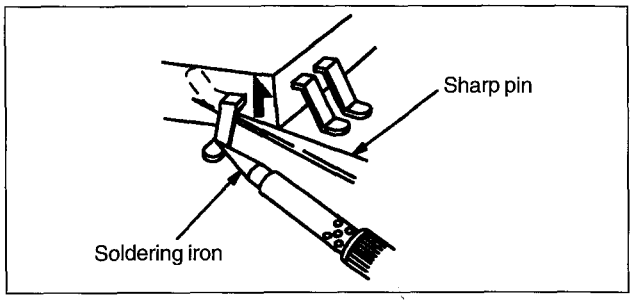

Fig. 1-23

• Using iron wire

a. Use unsoldering braid to remove the solder from all pins of the Flat Pack IC. Apply solder flux to all pins of the Flat Pack IC, to allow easy removal.
b. Affix the wire to workbench or solid mounting point (see Fig. 1-24)
c. Pull up the wire as the solder melts in order to lift the IC lead from the P.C.B. contact pad, while heating the pins using a fine-tip soldering iron or hot air blower.

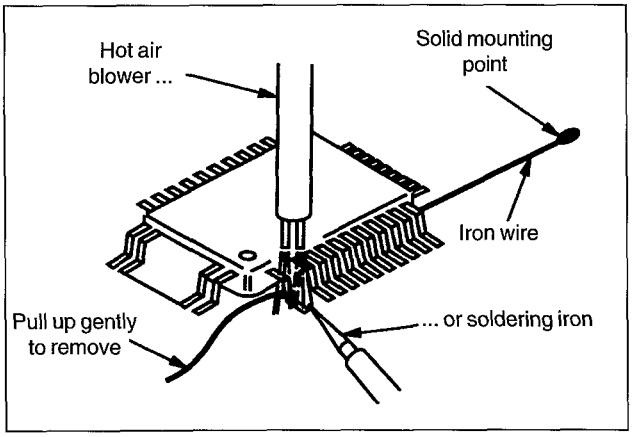

Fig. 1-24

Note:
When using a soldering iron care must be taken to ensure that the Flat Pack IC is not held by glue or the P.C.B. may be damaged if force is used.
If the IC is glued, heat the IC with hot air to loosen the glue.

2. How to install the FLAT PACK IC

a. Use unsoldering braid to remove the solder from the foil of each pin of the Flat Pack IC on the P.C.B. in order to install the replacement Flat Pack IC more easily.
b. The "•" mark on the Flat Pack IC indicates pin 1.
Make sure this mark matches the 1 on the P.C.B. when positioning for installation. Then pre-solder the four corners of the Flat Pack IC. (see Fig. 1-26).

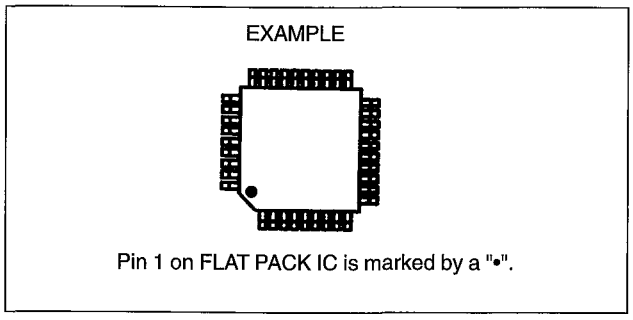

Fig. 1-25

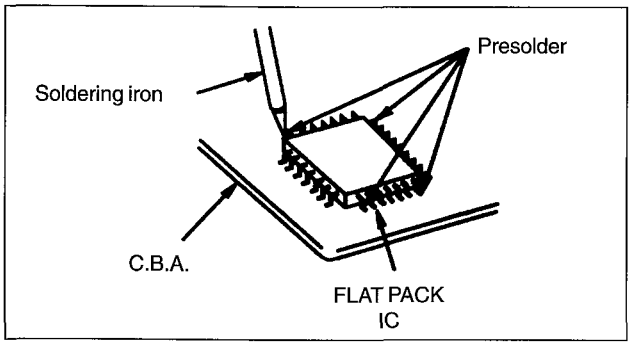

Fig. 1-26

c. Solder all pins of the Flat Pack IC. Make sure that none of the pins have solder bridges between pins on the Flat Pack IC.

Q. Note

All integrated circuits and many other semiconductor devices are electrostatically sensitive and therefore require the special handling techniques described in the "SAFETY INSTRUCTIONS" section of this manual.

R. Voltage measurements

Color bar signal in SP REC and PB modes.

Note:
Voltage indications for the REC. and PB mode on the schematic diagrams are shown below:

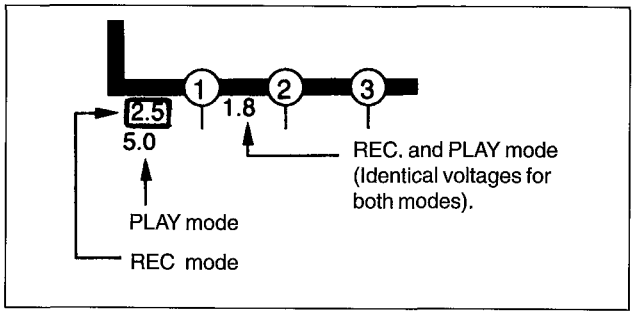

Fig. 1-27

S. How to read wave forms

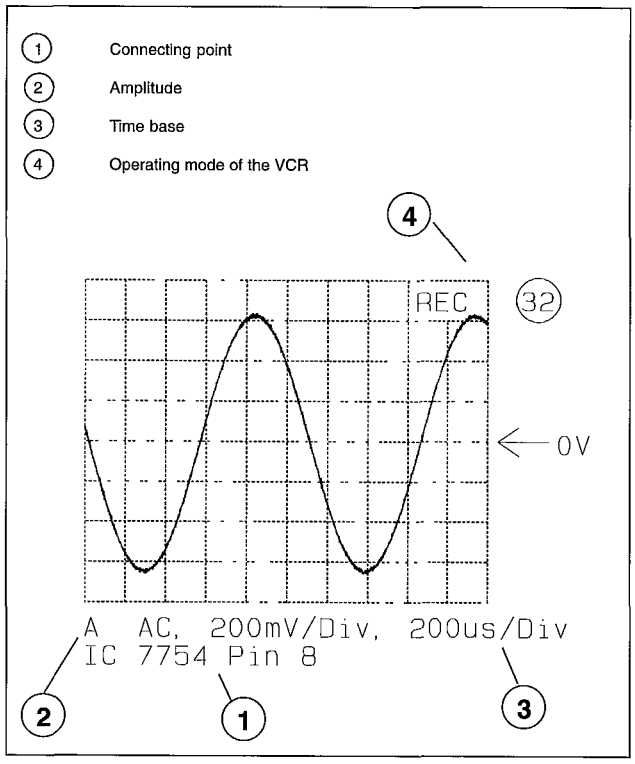

Fig. 1-28

T. Voltage indication of Zener diodes

The Zener voltage of Zener diodes is indicated as such on schematic diagrams:

Example: BZX79C**20**.....Zener voltage: 20 Volts

U. How to identify connectors on schematic diagrams

Each connector is labeled with a connector number and a pin number indicating to what component it is connected; in other words, its counterpart.

Use the Connecting Wiring Diagram to find the connections between associated connectors.

Example:
The connections between C.B.A.s are shown below:

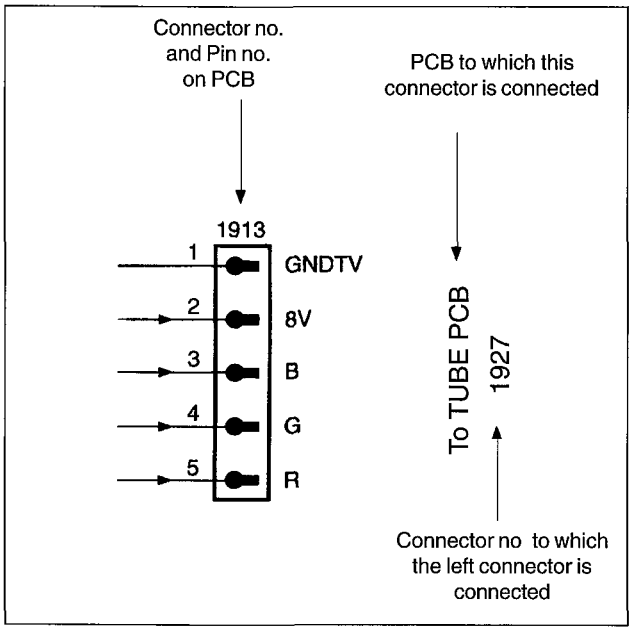

Fig. 1-29

II. ADJUSTMENT PROCEDURES
A. MECHANICAL ADJUSTMENT PROCEDURES

1. DISMANTLING THE CABINET PARTS

1. Dismantling flow chart

This flow chart indicates the steps for dismantling the cabinet parts and the boards in order to gain access to the items for service. When reassembling, perform the steps in reverse order.

Caution:
Disconnect AC plug before dismantling.

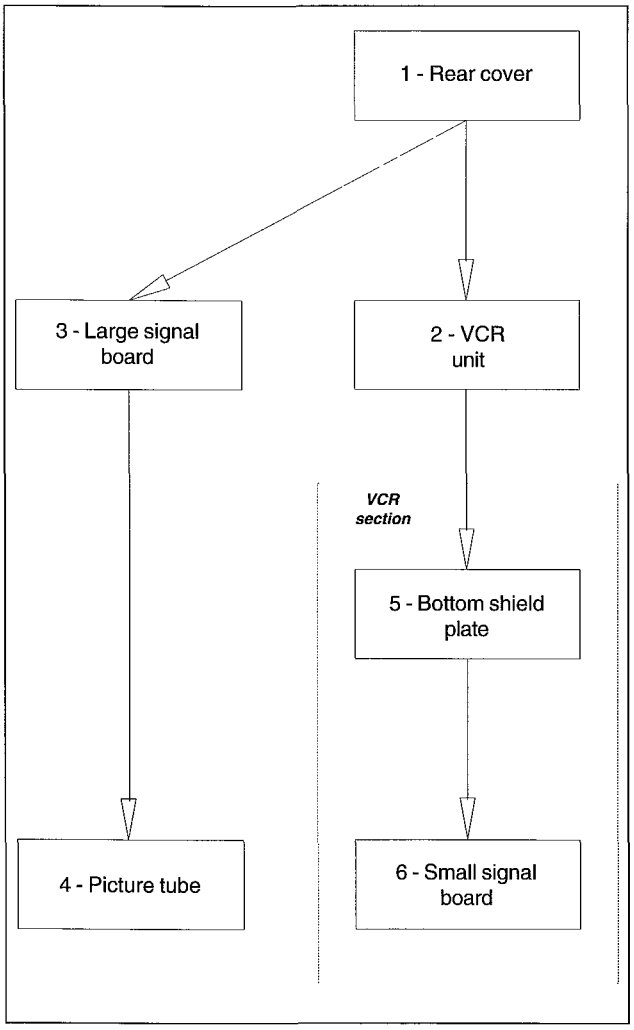

Fig. D1

2. Dismantling

STEP LOC N°.	PART	FIGURE N°	REMOVAL: UNLOCK / UNHOOK REMOVE / DISCONNECT UNSCREW	Note
1	Rear cover	D2	• 6 (19)	-
2	VCR unit	D3	• 4 (12) • Connectors: 1921, 1922, 1923, 1967, Loud-speaker	1
5	Bottom shield plate	D4	• 3 (31) • Snap hooks	-
6	Small signal board	D8	• Connectors: 1900, 1901, 1902, 1903, 1904, 1905 • Tape deck unit	1
3	Large signal board	D5	• 2 (12) • Connectors: 1921, 1922, 1923, 1924, 1925, 1967	-
4	Picture tube	D6	• Anode cap and CRT board • Large signal board • Deflection Yoke connector • Degaussing coil connector • 4 (2)	2

Abbreviations list:
6 (19) = 6 screws (19)

1. When reinstalling:
Ensure the tape deck unit is mounted completely on the small signal board. When inserting the VCR unit in the set housing, the lever which serves to open the lift flap has to be pushed into the flap guide.

2. To remove the picture tube, proceed as follows:
   1) Discharge the anode to CRT Ground. Then remove the anode cap.
   2) Carefully pull-out the CRT board from the tube.
   3) Disconnect the deflection yoke connector and the degaussing coil connector from the large signal board.
   4) Place the set face down on a soft cloth before removing the picture tube.

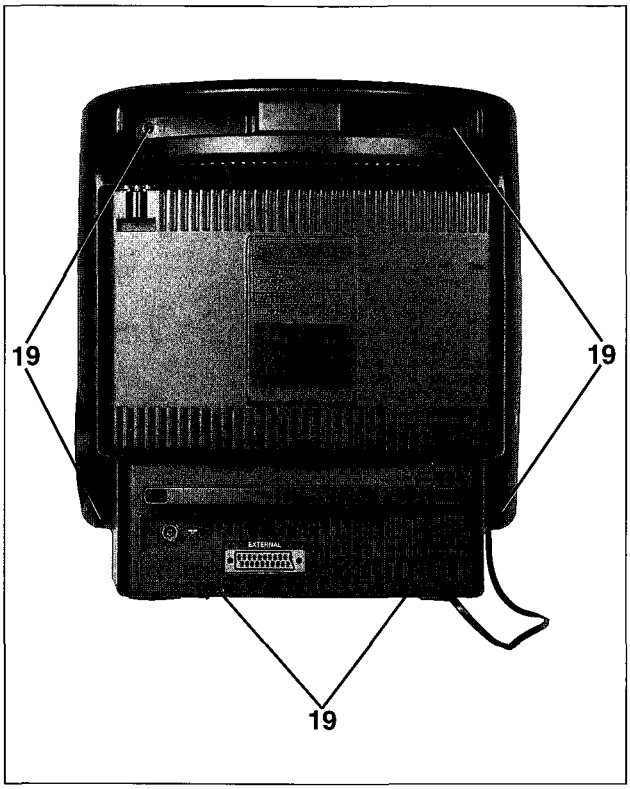

Fig. D2

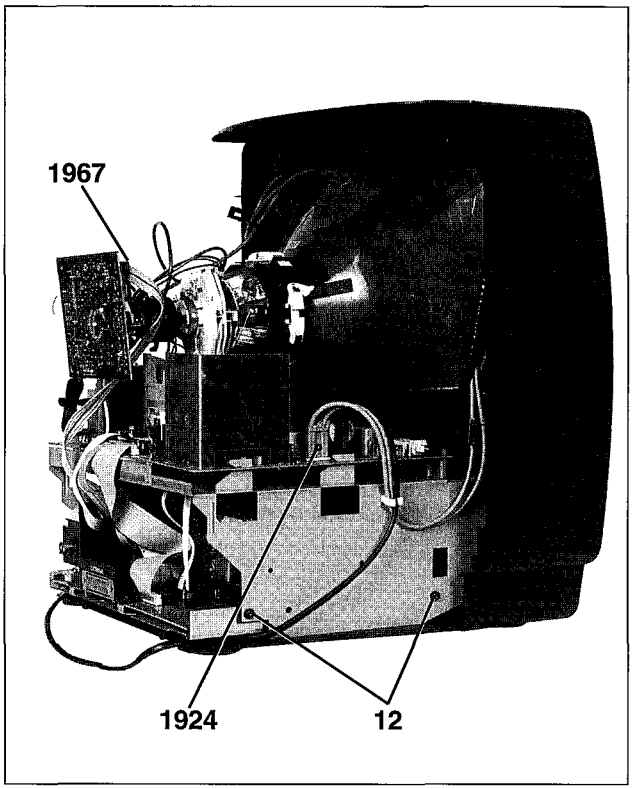

Fig. D3

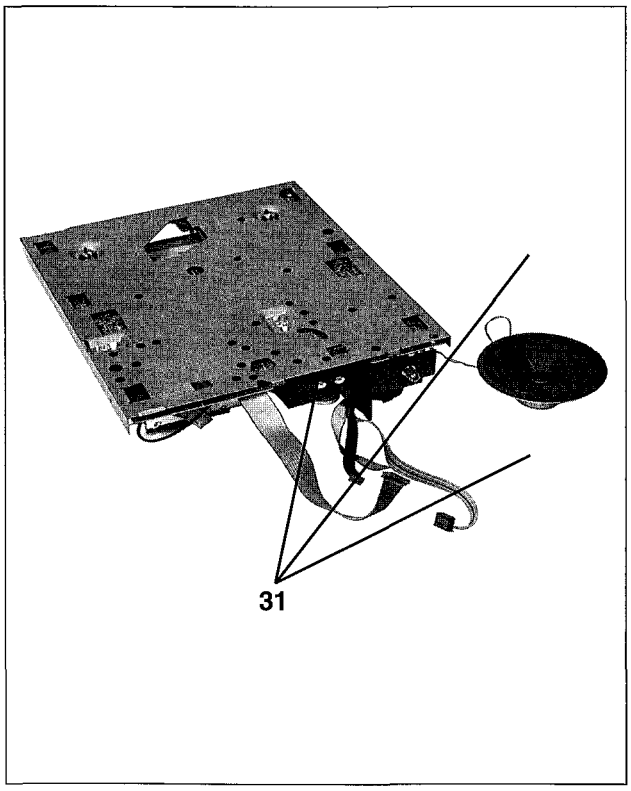

Fig. D4

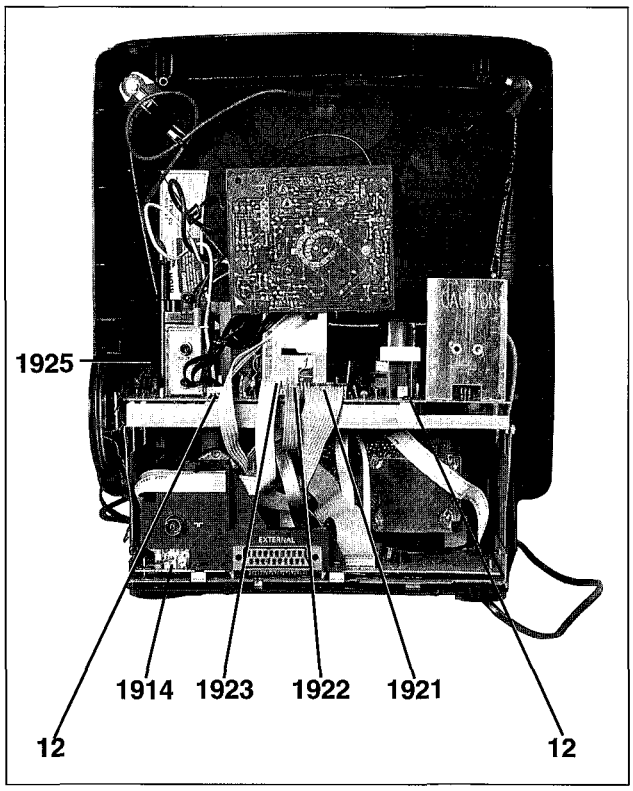

Fig. D5

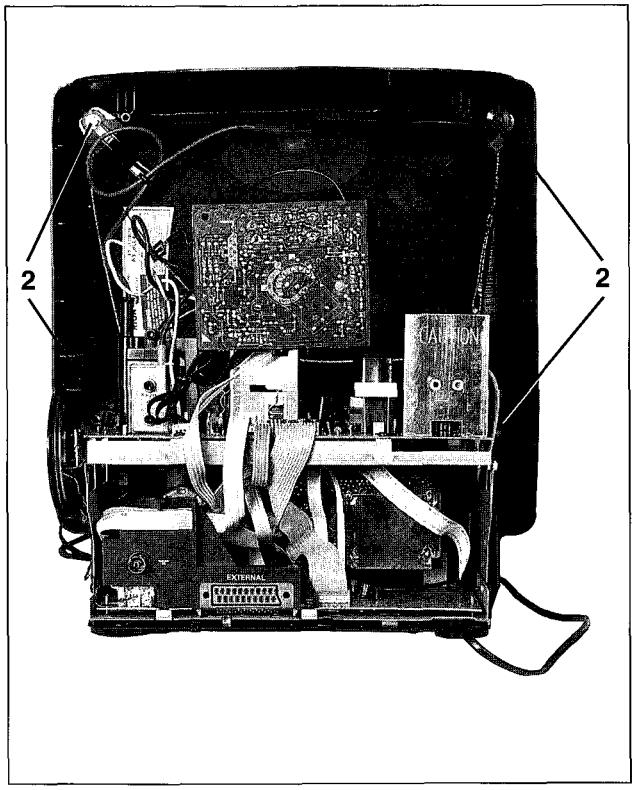

Fig. D6

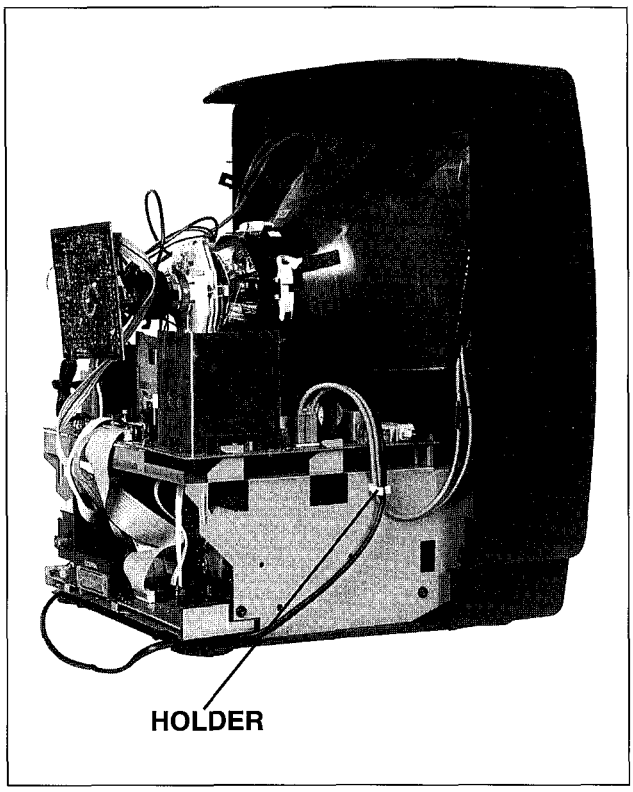

Fig. D7

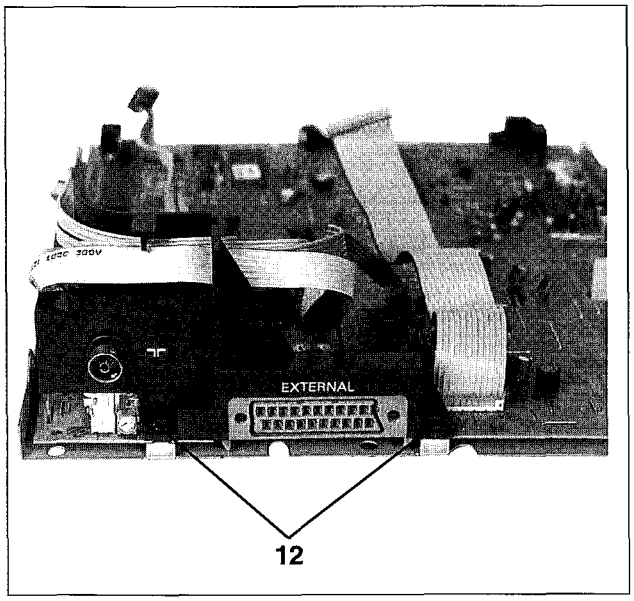

Fig. D8

2. PROCEDURE FOR CLEANING THE HEAD DRUM

1. Open the set to gain access to the video heads.
2. Use a cassette with no tape or operate the set without a cassette (in this case, unplug the LED light prism from the top). Activate the play mode.
3. Use two cleaning cloths moistened with 91% Isopropyl alcohol. Press them gently against the rotating video heads (see fig. M1).
4. It is recommended that the full tape path is cleaned.

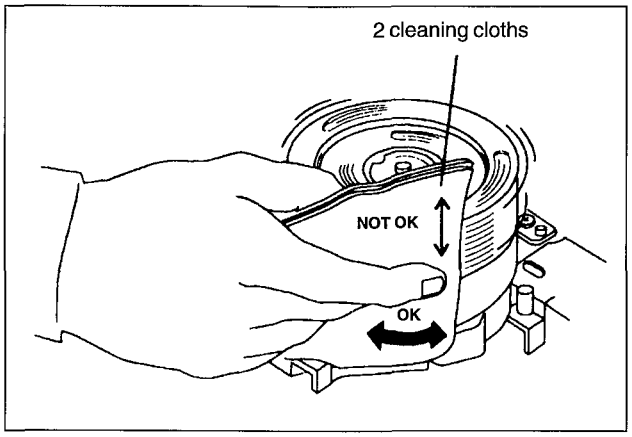

Fig. M1

CAUTION:
• Never operate or turn the drum in a clockwise direction (top view).
The oil in the one way spiral groove bearing will be forced out, causing premature breakdown of the drum motor.

NOTES:
• Do not rub vertically.
• Do not apply pressure to the head. If contaminant is not easily removed, continuous gentle cleaning will usually remove it.
• After cleaning the video heads, stop the drum from rotating, clean fingerprints from the cylinder with 91% isopropyl alcohol. Do not touch drum assembly with bare hands, use nylon gloves.

CAUTION:
All 91% isopropanol alcohol must be removed from the tape path after cleaning using a dry head cleaning cloth, as otherwise tape damage may be caused.

TAPE DECK MECHANISM

This tape deck has three motors:
• the first provides a precision drive for the head drum
• the second provides a direct drive for the capstan and belt drive for the reel tables
• the third motor drives the lift and tape loading/unloading operations.

To obtain a high repair standard we have developed a range of service kits (see mechanical replacement parts list).
These kits cover the connected spare parts.
With the exception of kit M, kits must be replaced completely.

DECK PARTS REPLACEMENT

This procedure starts with the cabinet parts, the small signal board and the cassette holder already removed.
The procedure for removing and refitting the following parts is described; only the cassette holder, the head drum motor, the capstan motor and the A/C heads are fixed by screws.
All other deck assembly parts are held by snap hooks.

IMPORTANT:
After each repair of the drive assembly, the cassette holder must be manually returned to the "EJECT" position.

3. ADJUSTMENT PROCEDURES

1. Upper cylinder replacement

Work with extreme care when removing or replacing the head disc. Do not touch video heads during servicing.

Removal:
- Remove the deck from the large signal board (refer to disassembly method on page 2-1, steps 2, 5 and 6).
- Nylon gloves should be worn when handling the upper cylinder.
- Remove 2 screws from the head amplifier bracket to gain access to the upper cylinder.
- Turn the upper cylinder until the oblong hole in the inner rotor is seen through the bigger hole of the lower portion of the cylinder motor.
- Insert reference pin C (included with each service upper cylinder) through the bigger hole of the lower cylinder motor until the pin snaps into the oblong hole on the inner rotor.

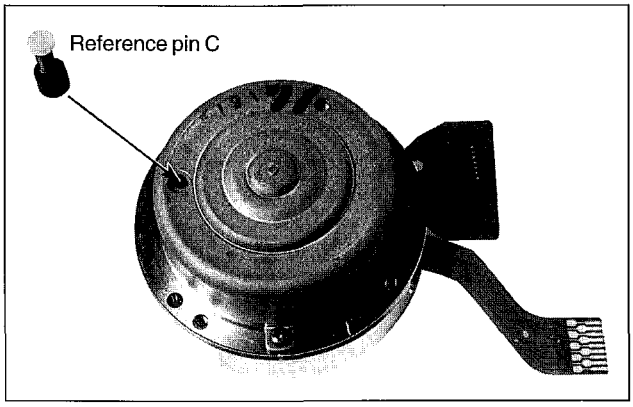

Fig. M2

- Align the upper cylinder removal tool's reference element with the ∇ symbol (Fig. M3) to remove the upper cylinder's upper clamping plate (short pins).

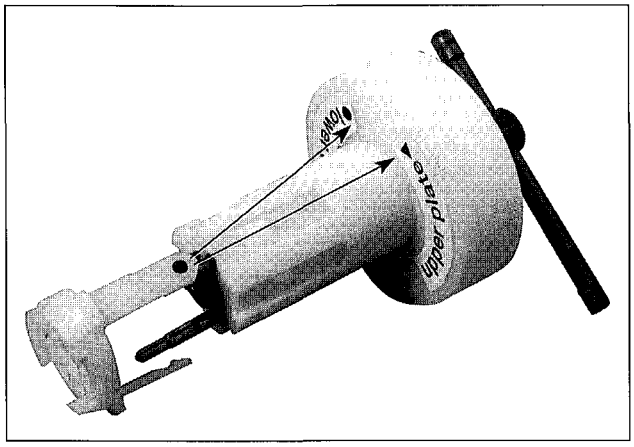

Fig. M3

- Position the upper tool's arm in the closed position, then place it on the upper clamping plate through the three holes. Turn the tool's arm 90° to the open position and remove the upper clamping plate from the upper cylinder (fig. M4).

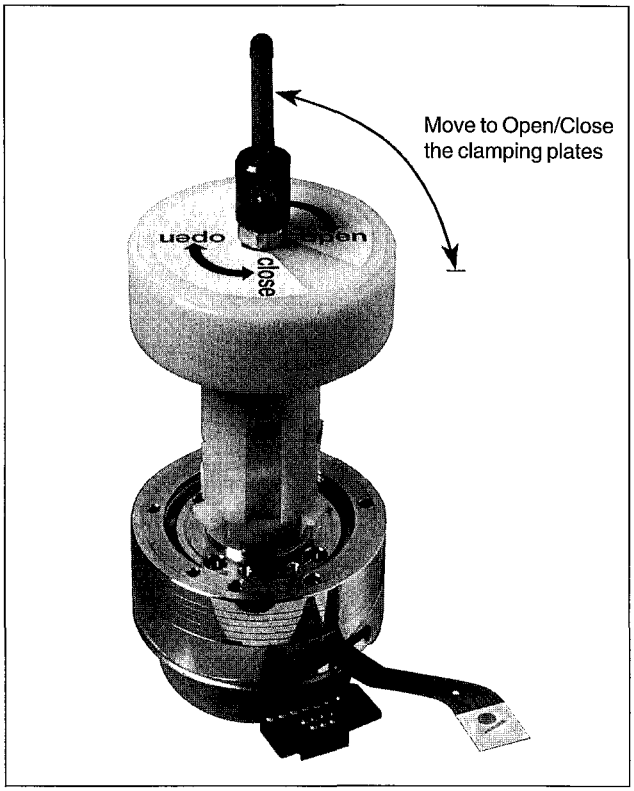

Fig. M4

- Pull the Upper Cylinder Removal Tool's reference element and align it with the O for the removal of the upper cylinder's lower clamping plate (long pins; see fig. M3). Position the upper tool's arm in the CLOSED position, then place it on the lower clamping plate through the three holes of the upper cylinder. Ensure that all three pins snap into the lower clamping plate.
Loosen the clamping plate by turning the tool's arm 90° in the OPEN position. Remove the upper cylinder.

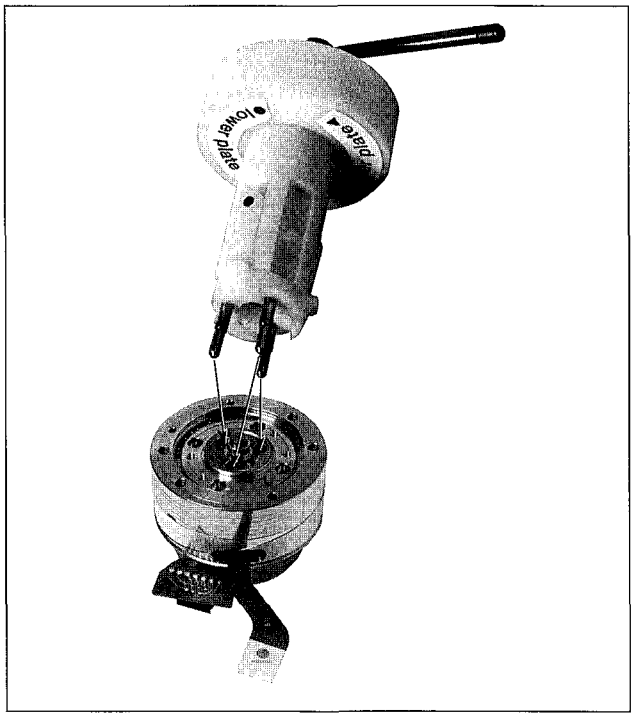

Fig. M5

Installation:
• Before installing the new head disc, make sure that the lower cylinder motor shaft is clean and undamaged. (The shaft has to be free of grease and must not be touched with bare hands).
• Insert the two mylar foils (included with each new upper cylinder) in the upper cylinder. (Fig. M6)

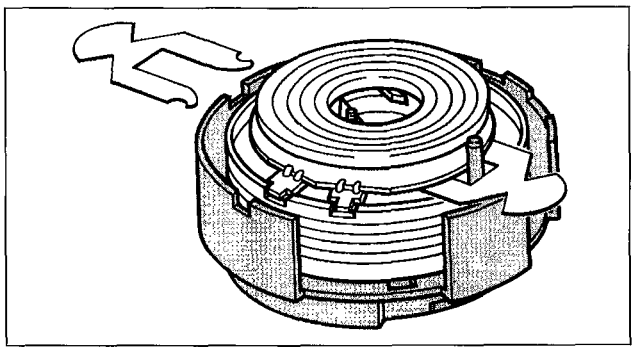

Fig. M6

• Position the tool (reference: lower clamping plate) on the new upper cylinder (with its protective cover) and loosen the lower clamping plate by turning the arm 90°.

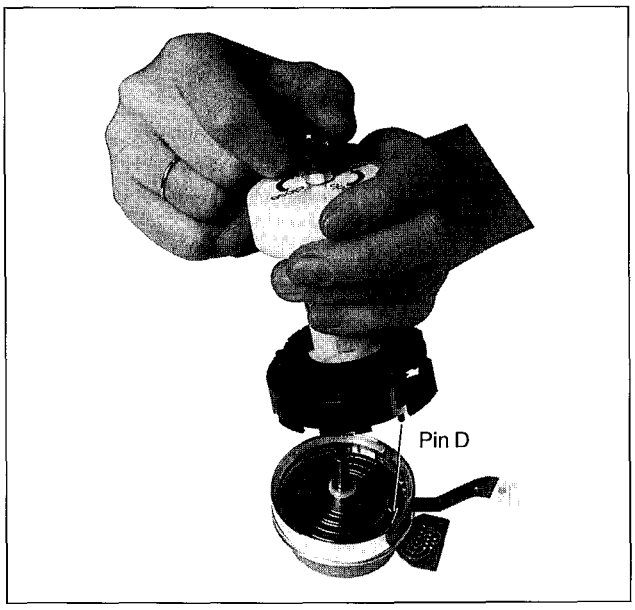

Fig. M7

• Position the upper cylinder so that pin D of the protective cover engages in the hole of the stator (the arrow on the protective cover must point towards the lower cylinder print; see fig. M7).

• Reach the exact position by pressing the tool down with a force of 1N and fix the lower clamping element by turning the arm towards "CLOSED".
• Remove the tool.
• Change the tool to "upper clamping plate" and position the clamping element exactly (see fig. M8).

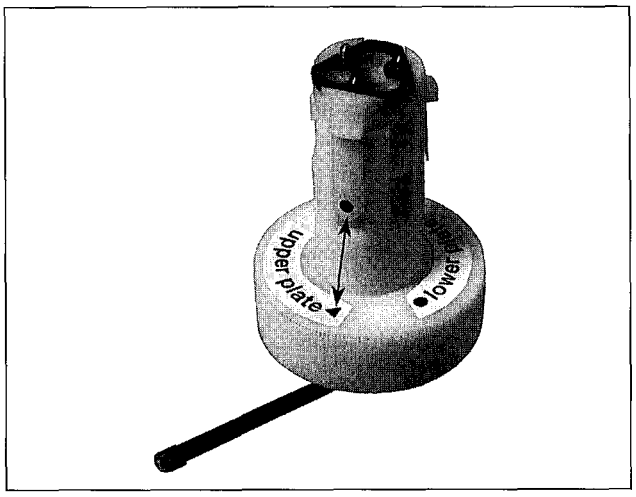

Fig. M8

• Tighten the clamping plate by turning the lever towards "OPEN".
• Position the tool evenly on the head disc, and fix the clamping element by bringing the arm to the "CLOSED" position (see fig. M4)
• Remove the protecting cap from the head disc, withdraw the two mylar foils and remove the reference pin C from the bottom of the lower cylinder.

After replacing the upper cylinder, carry out the following adjustments and checks:
• Head switching pulse (chapter 3.3, page 2.38).
• Record current adjustments (chapters 3-4-2, 3-4-3, page 2.39).
• Tape path alignment (chapter 4, page 2.8).

2. Replacing the head drum motor

Work with extreme care when removing or replacing the lower cylinder motor. Do not touch Video Heads during servicing.

1. Remove the VCR unit (page 2-1).
2. Remove the tape deck assembly from the VCR unit.
3. Remove the head amplifier bracket and the upper cylinder.
4. Remove the sensor print under the head drum motor.
5. Remove the 3 screws holding the head drum motor.

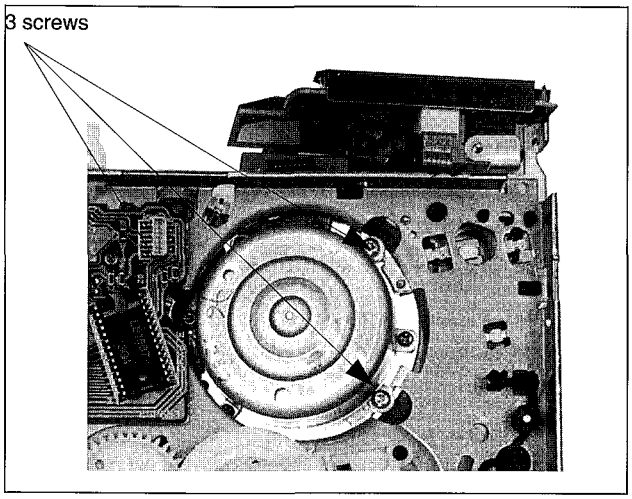

Fig. M9

6. Reinstall the new head drum motor onto the chassis by reversing the procedure previously described.

Note:
If any of the parts of the tape path are touched, clean them with a cleaning cloth saturated with 91% isopropyl alcohol.

3. Position adjustment of the tension arm

3.1 Brake band adjustment

• Set the drive to PLAY mode.
• Adjust the brake band my means of adjusting tool (from the underside of the deck) until the edge of the elbow of the tape tension arm overlaps with the left inner edge of the left guide (see fig. M10/M11).

3.2 Tape tension adjustment

• Play a Cassette Tape (E180) from the beginning of the tape.
• Measure the tape tension before the left roller unit with a Tentelometer.
• Adjust (from the underside of the drive) the tension arm spring, pos. 11, to a tape tension of 0.24N ± 0.02N e.g. 24g ± 2g with the adjustment tool (see fig. M10/11).

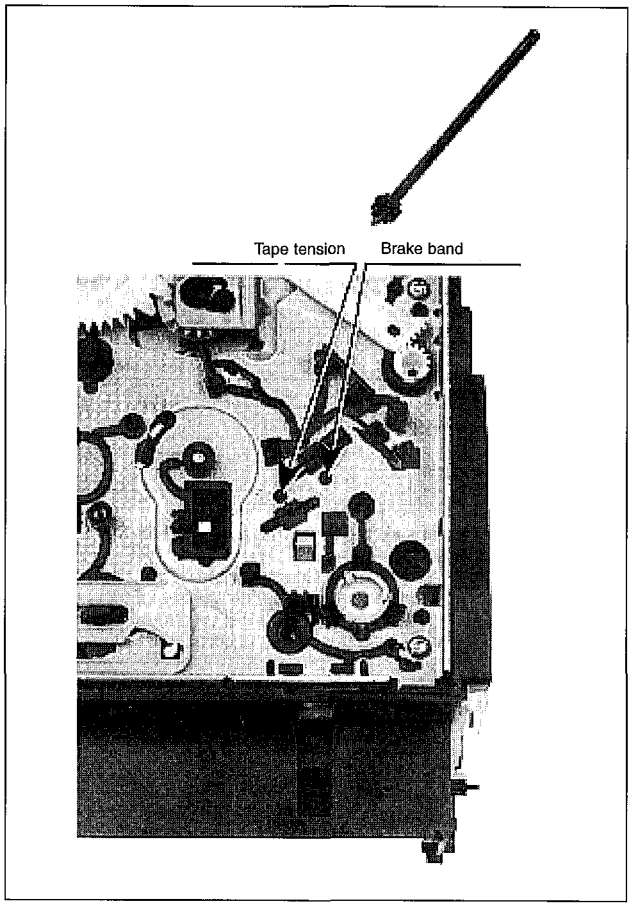

Fig. M10

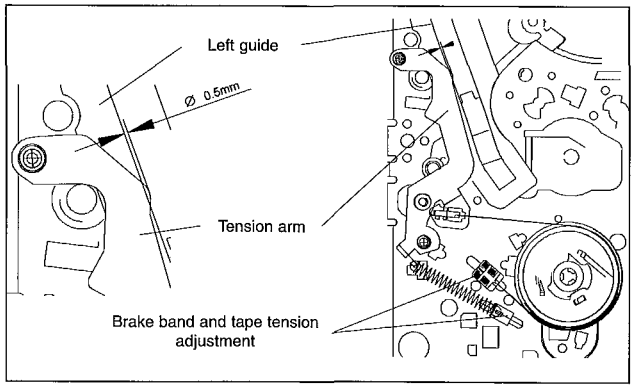

Fig. M11

4. Tape path adjustment (final adjustment)

4.1 View of the tape path

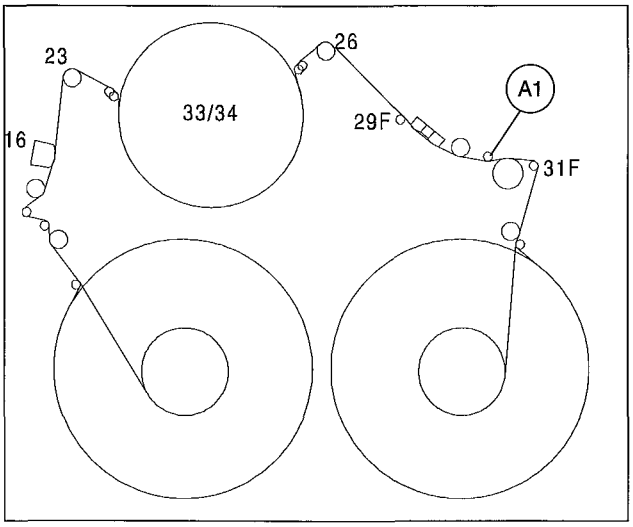

Fig. M12

4.2 Tape path adjustment

4.2.1 Audio/CTL head adjustments Tilt angle adjustment

• Set the drive to the "SEARCH FORWARD" mode.

Adjustment **with** tape guide A1:
• By means of the tilt angle adjusting screw, move the tape until the lower edge just touches the tape guide A1 (see fig. M14) ; the tape must not be distorted by the lower edge.

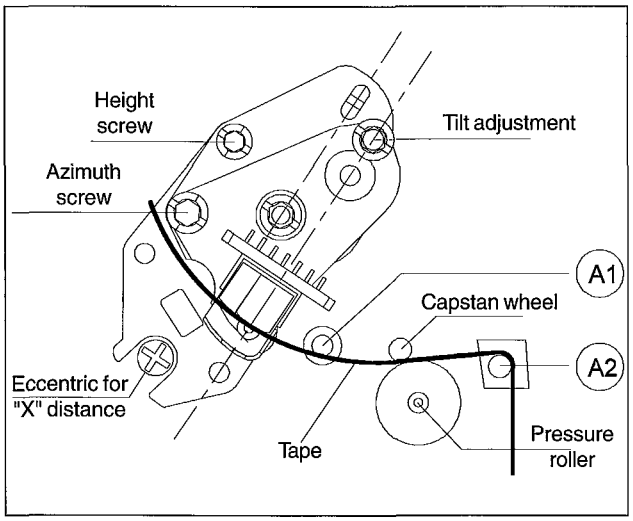

Fig. M13

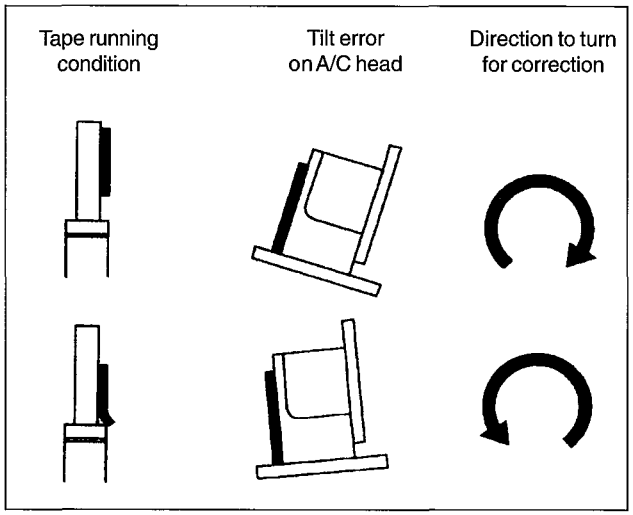

Fig. M14

4.2.2 Height and azimuth adjustments

The height of the A/C head assembly has already been adjusted at the factory, so it is only necessary to check the adjustments.

Symptom of incorrect adjustment.
If the control signal is not properly picked up, servo operation cannot be achieved.

This control is required if the A/C head has been replaced, or if it is completely incorrectly adjusted.

1. Basic height adjustment

Looking at the lower edge of the control head, with a E180 cassette tape in motion, ensure that the lower edge of the tape runs 0.25 mm above the lower edge of the control head.

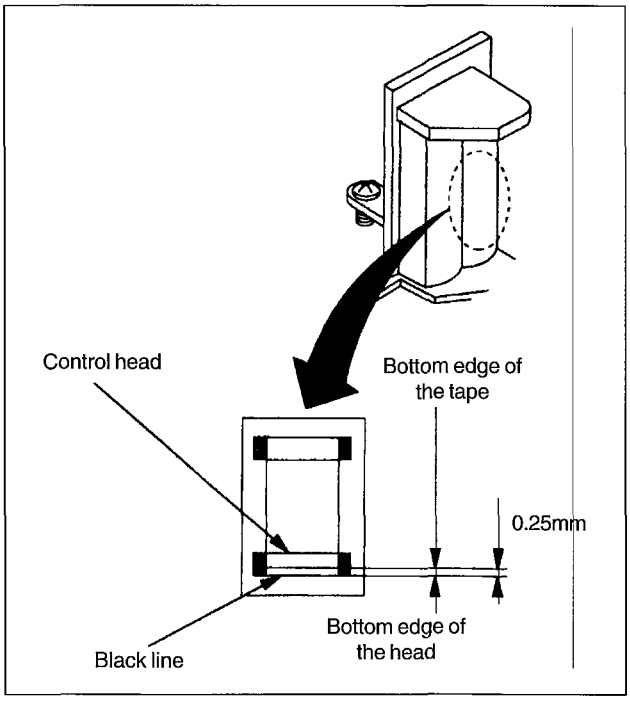

Fig. M15

2. Final height and azimuth adjustment

Symptom of incorrect adjustment:
If the position of the A/C head is not properly adjusted, the audio S/N ratio is poor.

- Connect an oscilloscope to the linear audio output.
- Play the 1 kHz audio section on the test cassette.
- Adjust for maximum output voltage by means of the height adjustment screw (see fig. M15).
- Play the 6 kHz audio section on the test cassette.
- Adjust to maximum output voltage by means of the azimuth adjustment screw. (fig. M15)
- If necessary, repeat this procedure
- Check the tilt angle adjustment (see chapter 4.2.1).

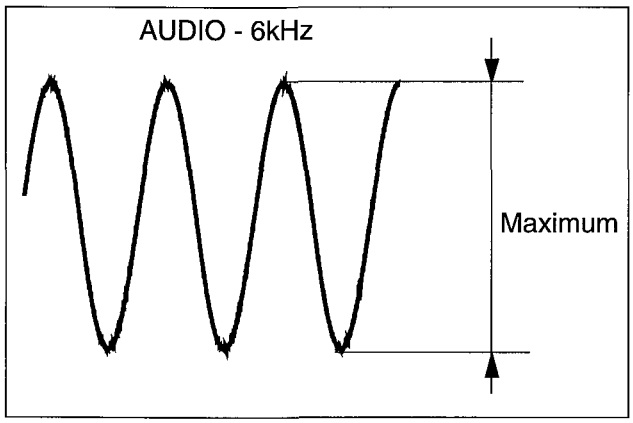

Fig. M16

If the tape path was completely out of adjustment or if several components in the tape path have been replaced, the above mentioned adjustments might have to be repeated several times.

4.2.3 "x" distance adjustment

- Before starting this adjustment, set the VCR in the "EJECT" position.
- Switch over to manual tracking (refer to chapter F; page 1-13).
- Insert the test cassette and enter the PLAY mode.
- Playback the Black & White part of the test cassette.
- Display the TRIV signal on an oscilloscope (DC-coupled) and adjust for maximum voltage by means of the eccentric screw (fig M13).

5. Control with the TRIV signal of the tape path adjustment

Symptom of incorrect adjustment:
If the envelope output is poor, the picture will contain a lot of noise. In this case the tracking will lose precision and the playback picture will be distorted by any slight variation of the tracking control circuit.

5.1 Left and right roller unit

Preparation:
- Connect one input of a dual trace oscilloscope to observe the tape sync pulse and the other input (DC coupled) to observe the tracking information TRIV.
- Trigger the oscilloscope externally on the head pulse HP1.
- Playback the black and white section of the alignment tape.

1. Enter the manual tracking mode (refer to chapter F; page 1-13) and change the tracking value with the ▶ or ◀ keys on the remote control.
2. Watch the tape sync pulse move to the left in relation to the TRIV signal.
3. Note the extreme left hand position reached by the sync pulse. Repeat as necessary.
4. Stop the movement of the pulse when the TRIV signal reduces from 1/2 to 2/3 of its maximum amplitude. A noisy picture (disturbance) is visible on the TV set and the CTL pulse should be to the left of the display.
This position will be stored unless the tape is ejected or the tracking is manually modified.
This condition works only if X-distance is correctly adjusted (see chapter 4.2.3).

Adjustment:
Adjust the left and right roller units to obtain the tracking signal TRIV as straight and flat as possible. (Fig. M17)

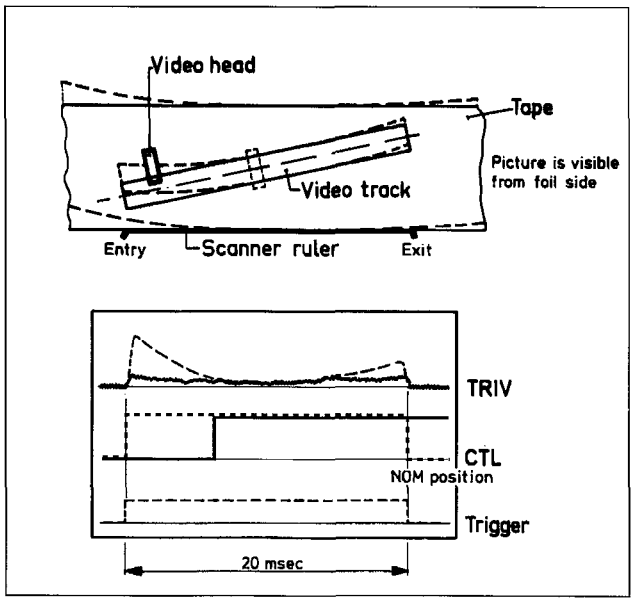

Fig. M17

When looking at the envelope output, the following possibilities are given (test point: pin 9 connector 1902):

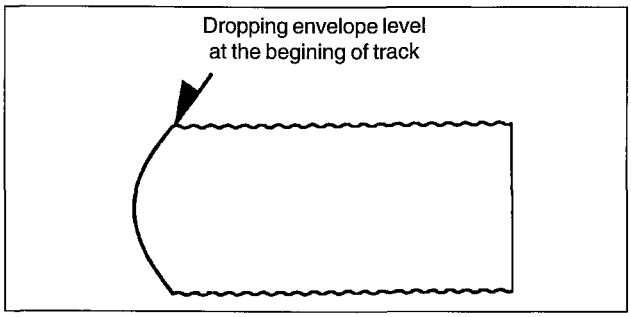

Dropping envelope level at the beginning of track (test point: pin 9 connector 1902).

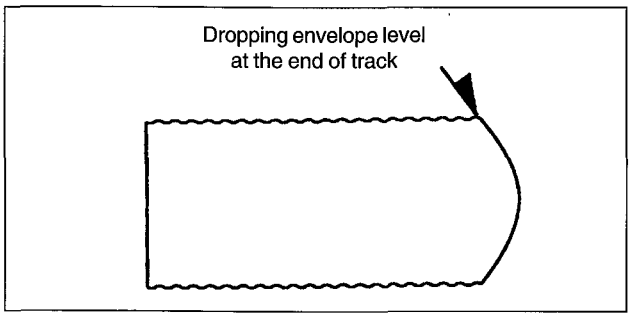

Dropping envelope level at the end of track (test point: pin 9 connector 1902).

When left and right roller units are adjusted properly, there is no envelope drop at the beginning or end of the tracks as shown in the above illustration.

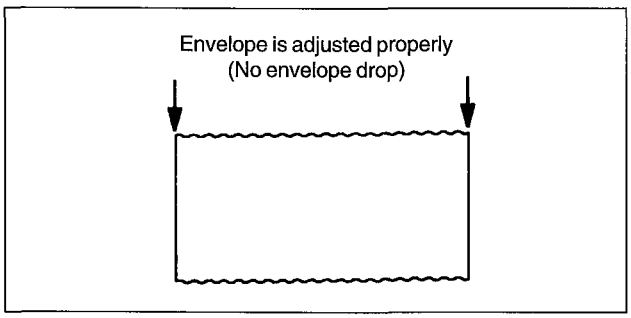

The tape path is properly adjusted.

6. Friction clutch control in playback

- Set the drive to "PLAY" mode.
- Place the torque meter on the right reel.
- Turn the capstan motor to move the right reel clockwise.
- Keep turning until the indication at the torque meter no longer changes (see fig. M18)
- The torque has to be 10.5 mNm ± 25% (105 gFcm ± 25%).

7. Reverse brake control

- Set the drive in the "SEARCH REVERSE" position.
- Place a torque meter on the right reel and turn the reel anti-clockwise, until the reel just starts to flip.
- The value indicated at the torque meter must be 7 mNm ± 3mNm (70 gFcm ± 30 gFcm).

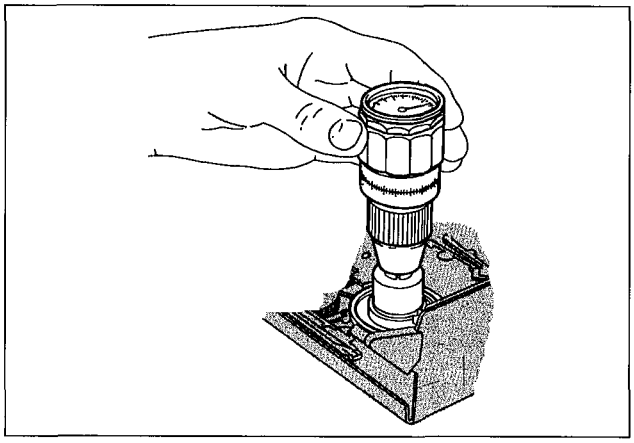

Fig. M18

8. Capstan motor replacement

- Set the drive assembly to the "EJECT" position.
- Remove the capstan belt on the underside; then free the rivet from the sensor print. Vertically lift Sensor Print part around the capstan motor. Move both sections of the sensor print clear of the capstan motor.
- Remove the three capstan motor fixing screws (see fig. M19) and withdraw the capstan motor downward from the drive assembly.

Reassemble in reverse order. Make sure that the capstan shaft is free of grease.

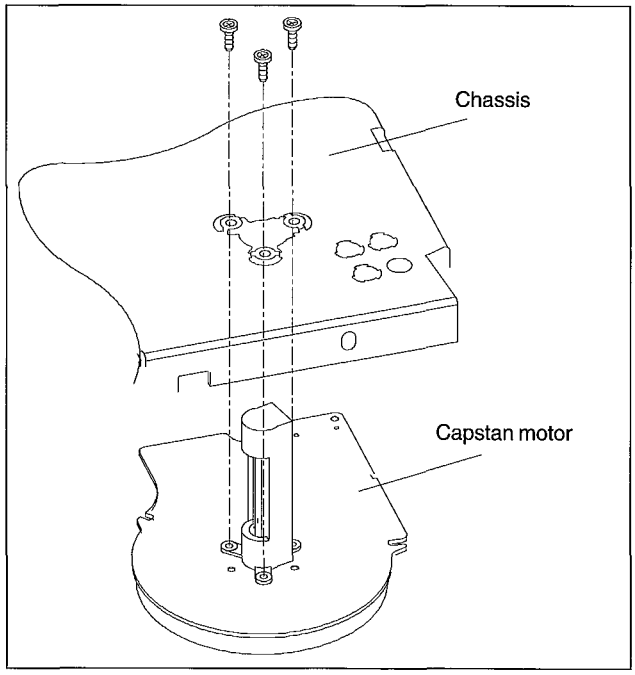

Fig. M19

9. Disassembly/Assembly procedures of mechanism

This procedure starts with the back cover, the small signal board, the shielding plate and cassette-up assembly already removed.
Also, all the following procedures for adjustment and parts replacement should be performed while unit is in the cassette -own position (page 2-12). When reassembling, follow the steps in reverse order.
It is not necessary to remove the cassette-up assembly for all these replacements, only the drawings and photos are done without cassette-up assembly lift and sensor print

				REMOVAL		INSTALLATION
STEP/ LOC N°.	START N°	PART		FIGURE N°	UNHOOK / UNLOCK RELEASE / UNPLUG	ADJUSTMENT CONDITION N°
1	1	Pressure Roller	T	DM1, DM3		
2	1	Pressure Roller Guide	T	DM 3		
3	1	Cam Shaft	T	DM 3	s1	See § 10, Alignment Procedure, Top View 2 (page 2.18)
4	4	Loading Motor	T	DM 1, DM 4		
5	4	Pulley Shaft Assembly	T	DM 1, DM 5	Loading Motor Holder/ Capstan Motor	See § 8, Replacement of Capstan Motor (page 2 10)
6	6	Index Lever	T	DM 1	* clip (C1)	See § 10, Alignment Procedure, Top View 2 (page 2.18)
7	6	Reverse Lever	T	DM 1		See § 10, Alignment Procedure, Top View 2 (page 2.18)
8	6	Intermediate Lever	T	DM 1	s2	See § 10, Alignment Procedure, Top View 2 (page 2.18)
9	6	Cam Wheel	T	DM 1	s3	See § 10, Alignment Procedure, Top View 2 (page 2.18)
10	10	A/C Head	T	DM 1, DM 6	* connector, screw, clip (A)	See § 4.2.1 et § 4.2.2 (page 2.8)
11	11	Cleaning Roller	T	DM 1	s4	Small plastic spring of cleaning roller arm must be placed on the left side of the pin from the chassis.
12	12	Roller Unit Right	T	DM 1, DM 7		See § 5.1 (page 2.9)
13	12	Loading Arm Right	T	DM 1, DM 8		See § 5.1 (page 2.9)
14	14	Loading Arm Left	T	DM 1, DM 9	Part of Sensor Print	See § 5.1 (page 2.9)
15	12	Roller Unit Left	T	DM 1, DM 10		See § 10, Alignment Procedure, Top View 2 (page 2.18)
16	12	Loading Gear	T	DM 2		See § 10, Alignment Procedure, Top and Bottom Views (page 2.18)
17	17	Erase Head Assembly	T	DM 1, DM 11		
18	18	Tension Arm	T	DM 1, DM 12	Brake Band Tension Arm Spring	See § 3.2, Tape Tension Adjustment (page 2.7)
19	19	Brake Band	T	DM 12		See § 3.1, Brake Band Adjustment (page 2.7)
20	19/20	Reel Table (S/T)	T	DM 1, DM 12		
21	21	Main Brake (Left / Right)	T	DM 1, DM 12	Brake Spring	
22	19/20	Brake Gear (Left / Right)	T	DM 1, DM 12 DM 13		
23	23	Tension Crank	T	DM 1, DM 16		See § 10, Alignment, Top View 2 (page 2.18)
24	24	Reverse Brake	T	DM 1, DM 17		Place in cam of Slider Gear See § 10, Alignment, Bottom View (page 2.18)
25	6-8,24	Slider Gear	T	DM 1, DM 17		See § 10, Alignment, Bottom View (page 2.18)
26	26	Worm Shaft	T	DM 1	s5, s6	Set Mechanism in "EJECT" Position
27	27	Swivelling plate / Swivelling Gear	T	DM 1	s7	
28	28	Record Protection Lever	T	DM 1	* Spring s8, s9	
29	29	Gear Pulley	B	DM 14	Capstan Belt	
30	29	Sensor Print Assembly	B	DM 15	* Plug to Capstan Motor, connector L2	
31	31	Clutch Assembly	B	DM 2, DM 16	Gear Pulley	
32	32	Clutch Lever	B	DM 2	Spring, Gear Pulley, s10, s11	
33	32	Changing Gear	B	DM 2		
34	32	Double Gear	B	DM 2, DM 13	Clutch Lever, Changing Gear	
35	32	Main Slider	B	DM 2, DM 16		
36	32	Cam Wheel Lever	B	DM 2, DM 16	Part of Sensor Print	
37	37	Cassette Loader Trigger	B	DM 2, DM 16	Part of Sensor Print	
38	38	Cassette Loader Gears	B	DM 1, DM 2 DM 16	* clip	
39	39	Tension Lever	B	DM 2, DM 16	Part of Sensor Print	
40	39	Cam Wheel Tension	B	DM 2, DM 16		See § 10, Alignment, Bottom View (page 2.18)
41	39	Cam Wheel Reverse	B	DM 2, DM 17		

List of abbreviations: T: Top, B: Bottom, C: clip,
S: Snap hook

Top view

Shown in the EJECT position

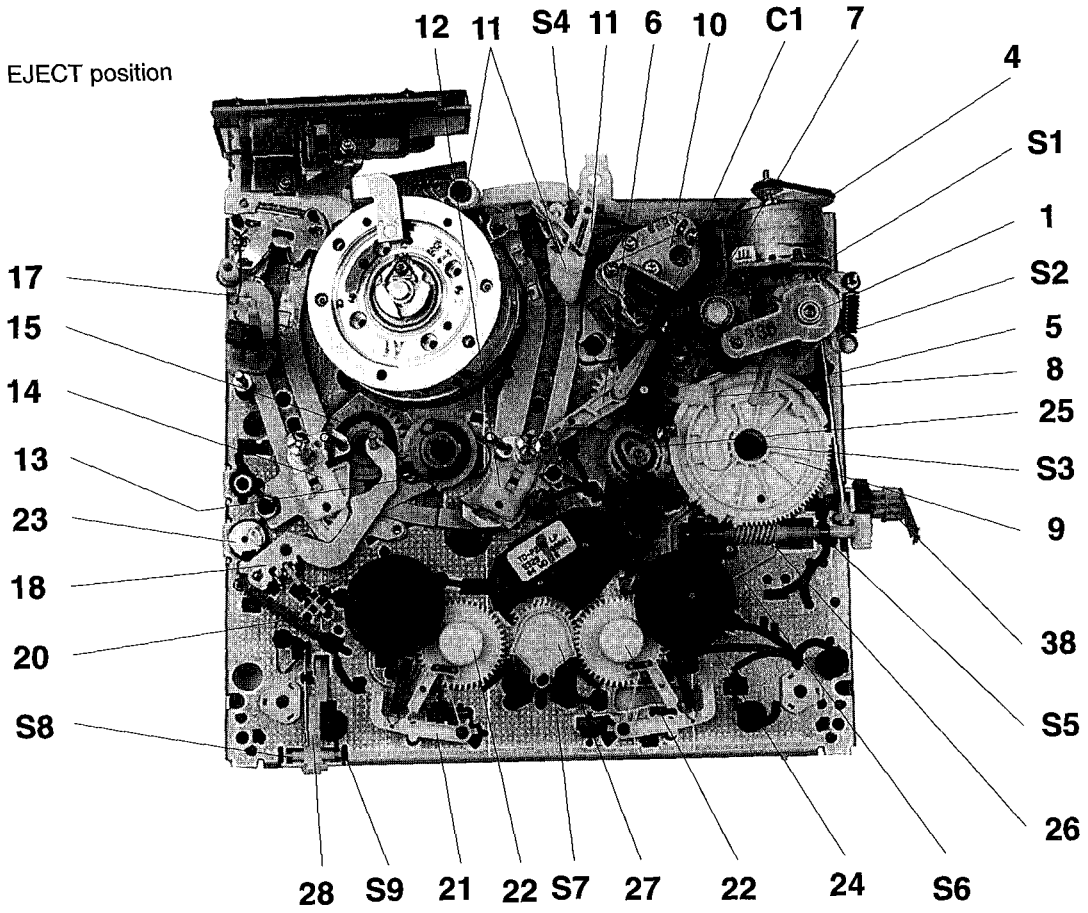

Fig. DM 1

Bottom view

Gear pulley already removed

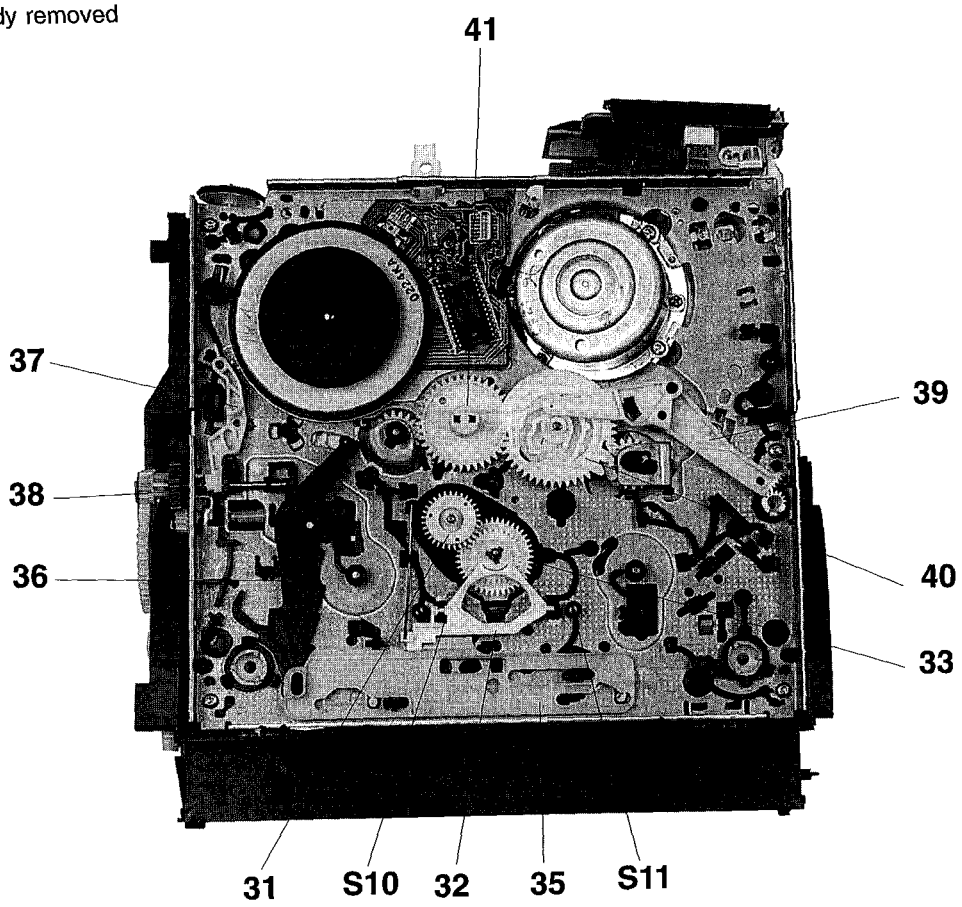

Fig. DM 2

Pressure roller

- Set the drive assembly to "EJECT" position.
- Unhook and remove the pressure roller tension spring (a).
- Release the pressure roller guide from the guide in the loading motor holder by pressing the top of the motor guide rearwards (b) and rotating the pressure roller guide assembly clockwise by approximately a quarter of turn (c).

The pressure roller and guide can now be lifted clear (see fig. DM 3).

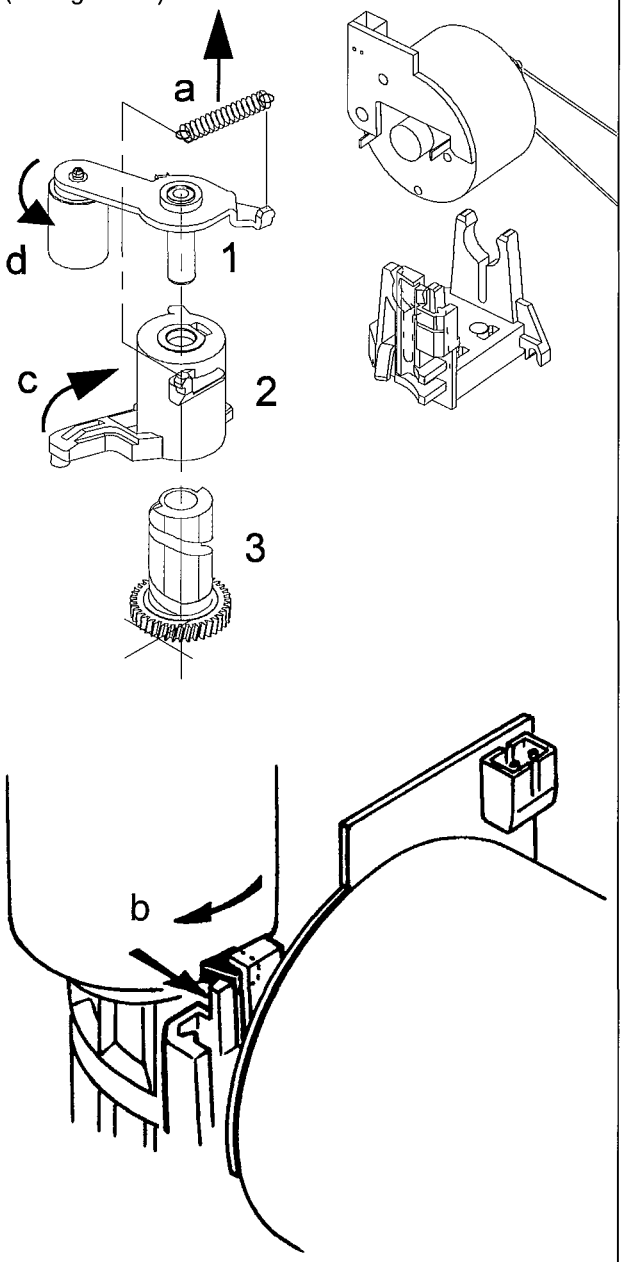

Fig. DM 3

Loading motor

- Remove the belt and disconnect the connector plug.
- Remove the loading motor from its supports.

Note:
When reassembling, ensure that the loading motor is correctly located in the front and rear supports.

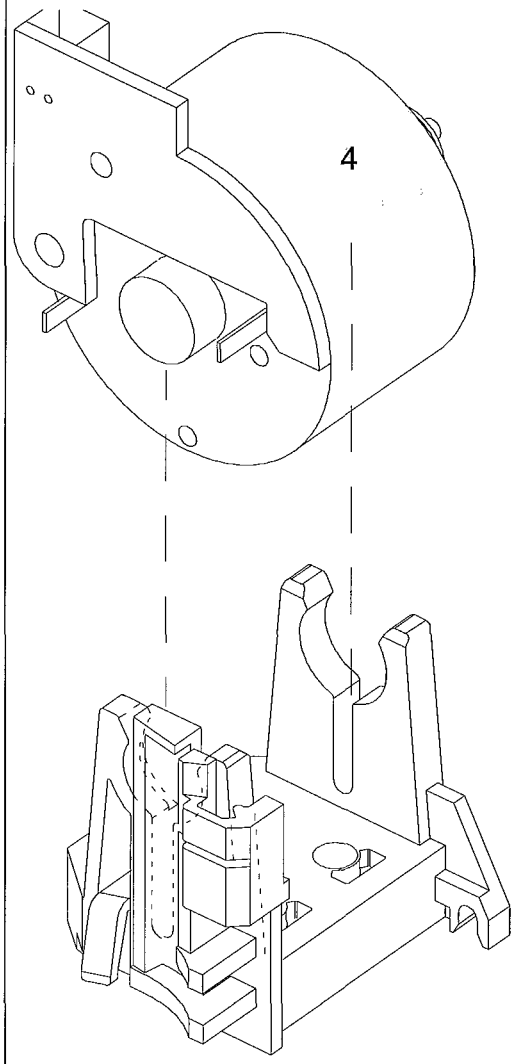

Fig. DM 4

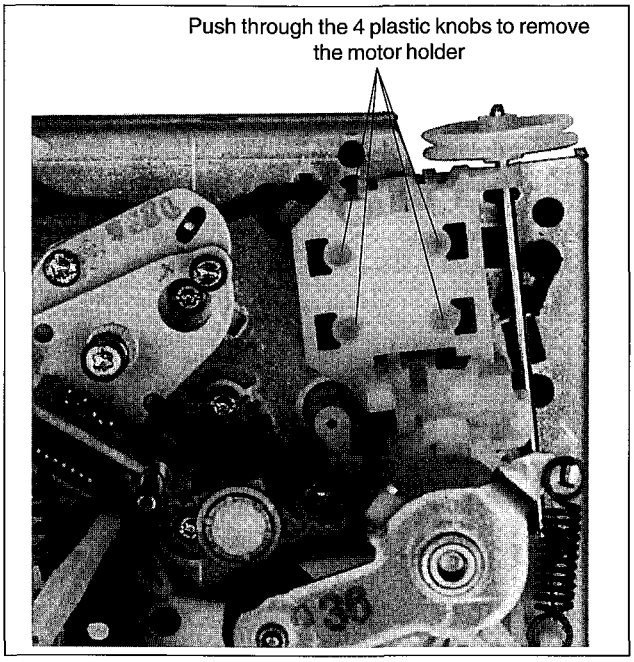

Fig DM5

Audio/CTL head

- Remove the fixing spring (A) and unplug the connector.
- Remove the fixation screw and replace the A/C head.
- When reassembling, use a new fixing spring (included with every new A/C head).

After the A/C head has been replaced, all adjustments described in chapters 4.2.1 and 4.2.2 must be carried out.

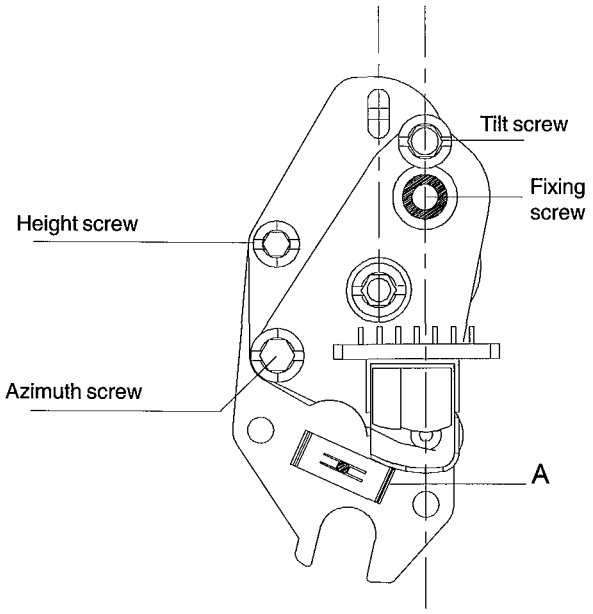

Fig DM 6

Right roller unit

- Set the unit to the "EJECT" position.
- Compress the two snap hooks with a pair of tweezers and remove the roller assembly from the roller unit (see fig. DM 7).
- Unhinge the right loading arm from the holding plate and push the latter towards the front of the deck to remove from the guide.

Note: During reassembling, ensure that the link from the roller is engaged in the hole of the holder plate.

After replacing the roller unit, the tape path has to be checked, and adjusted if necessary (see chapter 5.1; page 2.9).

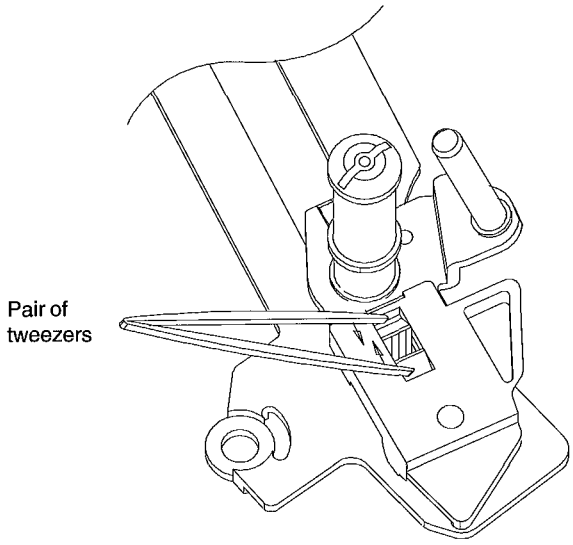

Fig. DM 7

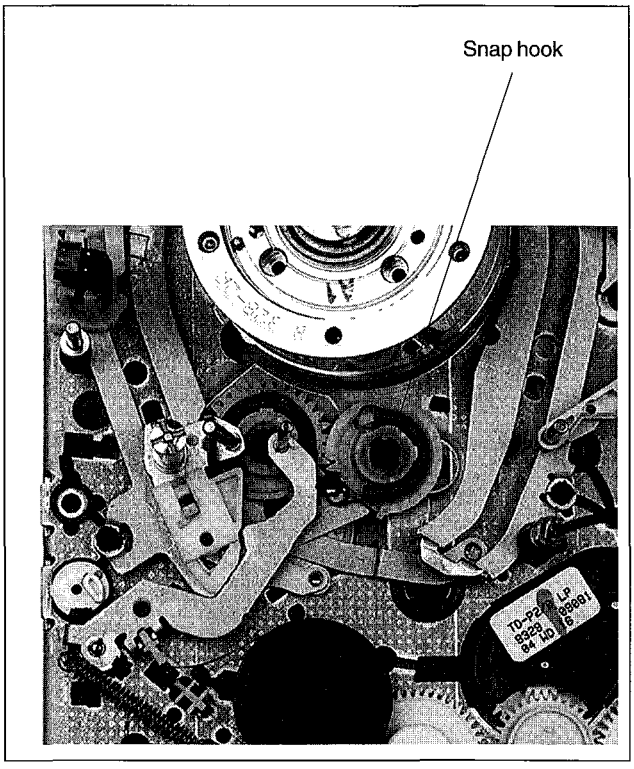

Fig. DM 8

Left roller unit

- Set the unit to the "EJECT" mode.
- Unhook the tension arm spring to avoid the tension arm from being pre-loaded.
- At the bottom side of the drive assembly, partially unhinge the sensor print and remove the tension lever.
- Compress the two snap hooks with a pair of tweezers (fig. DM 9) and remove the roller assembly (A) from the plate (B).
- Unhinge the left loading arm from the holding plate and remove it downward from the drive assembly through the recess in the chassis.
- Reassemble in reverse order.

Note: When reassembling
1. Place the carriage holding plate in the assembly with the semi-circular cutout near the rear of the deck.
2. When the holding arm is refitted, ensure the pin on the underside of the roller assembly protrudes through the link of the holding plate.

After replacing the roller unit, the tape path must be checked, and adjusted if necessary (see chapter 5.1; page 2.9).

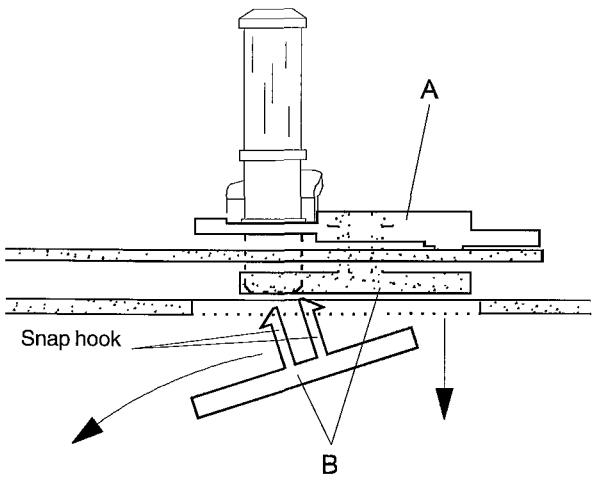

Fig DM 9

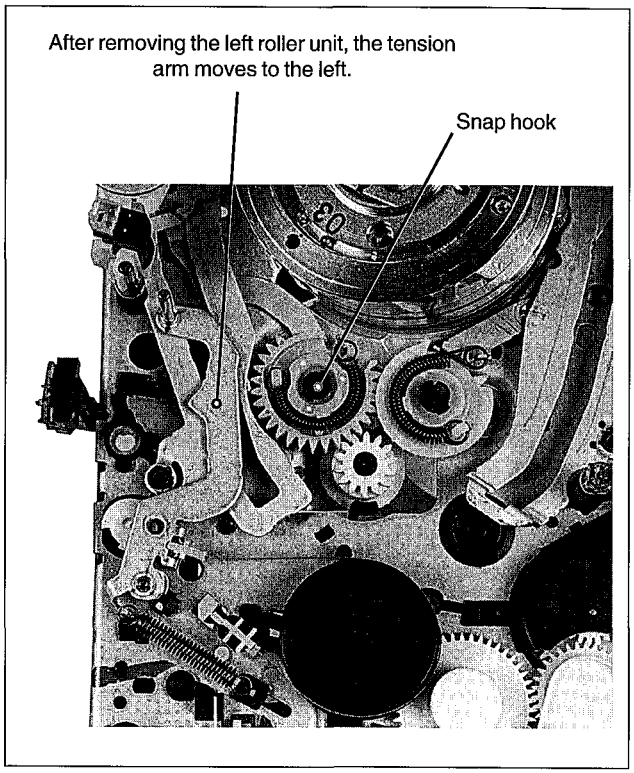

Fig. DM 10

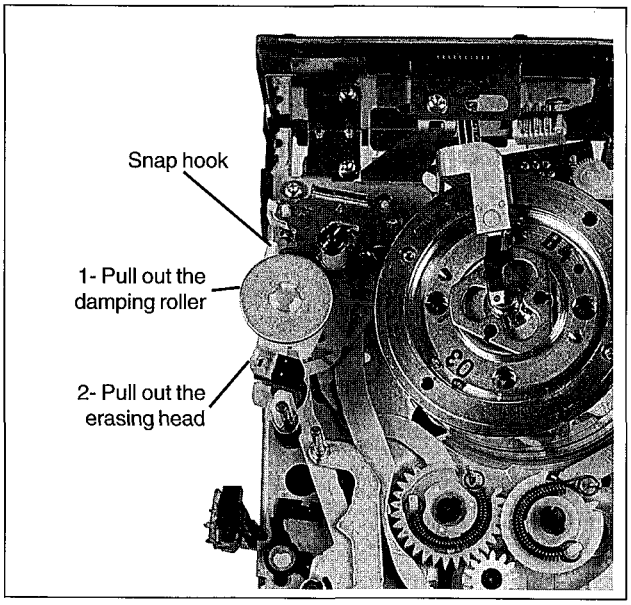

Fig. DM 11

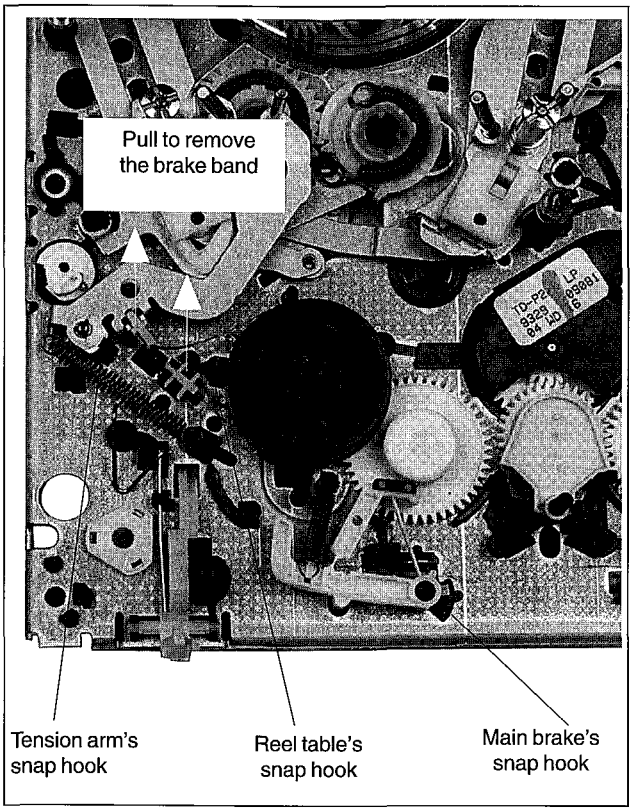

Fig. DM 12

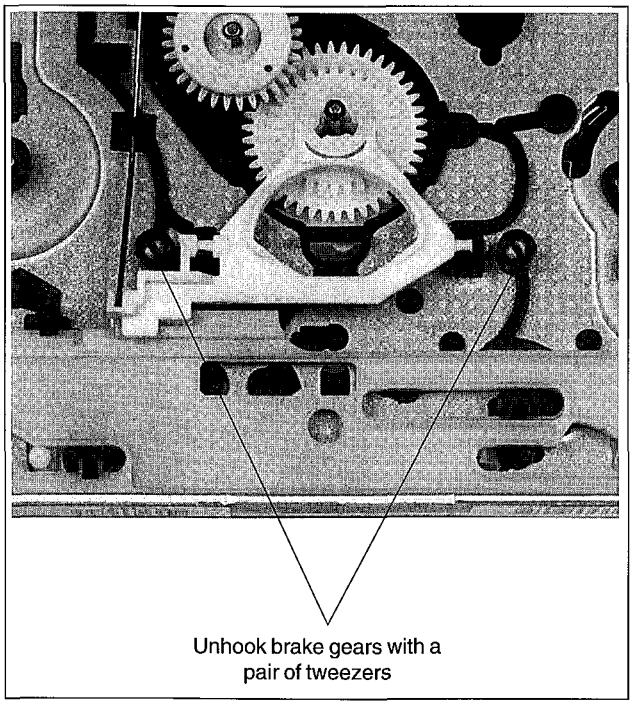

Fig. DM 13

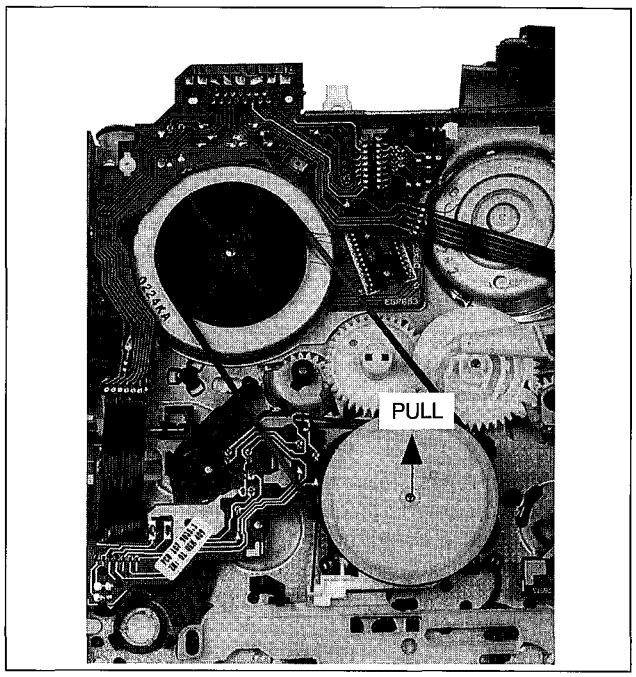

Fig. DM 14

Sensor print assembly

This manual contains the circuit diagram of this board and the technical data (see pages 3.10 and 4.5). If a part of the sensor print is defective, the whole sensor print assembly must be replaced.

- Remove the drive assembly from the set.
- Lift the sensor print vertically. Its plug and socket are connected to the capstan motor print.
- All other parts are attached using snap hooks, and can be easily removed.

Reassemble by snapping the snap hooks into place, and inserting the rivet B

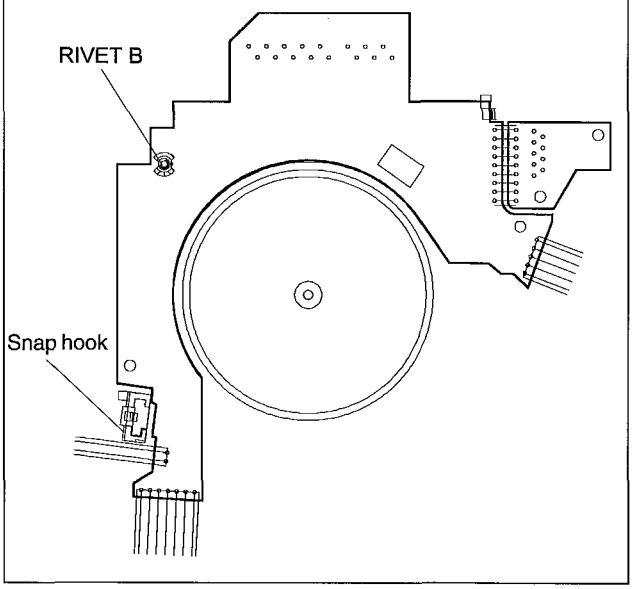

Fig. DM 15

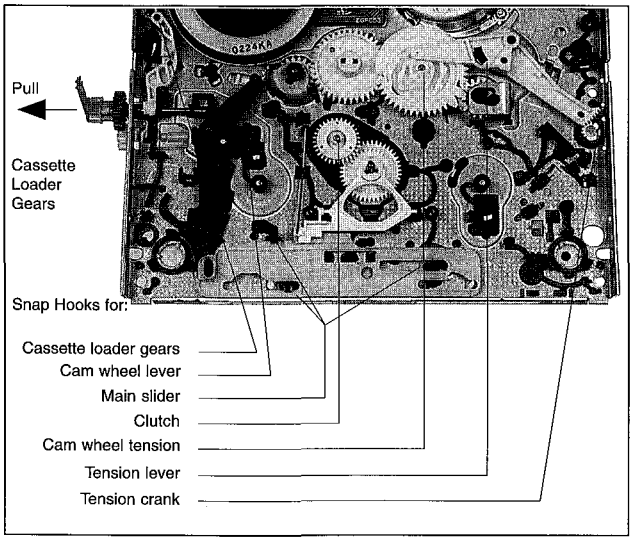

Fig. DM 16

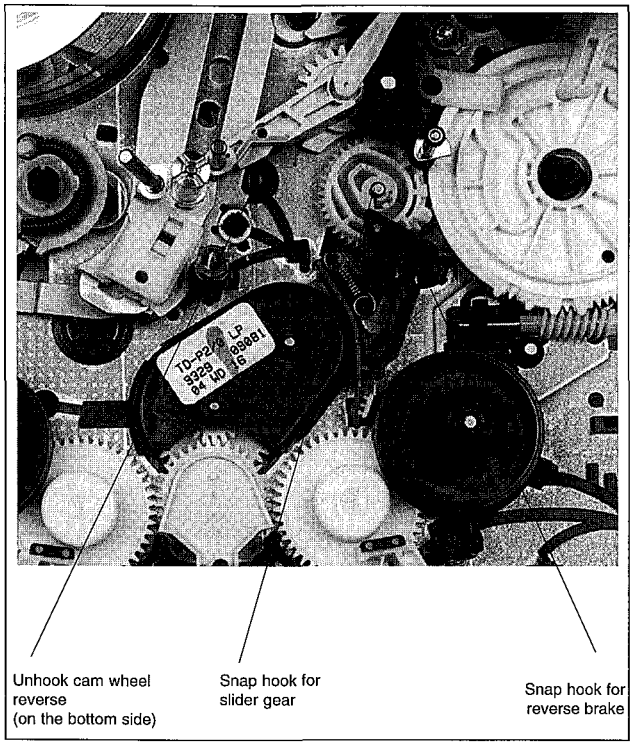

Fig DM 17

10. Mechanical alignment procedures

The deck must be in "CASSETTE DOWN" position.
The following diagrams indicate the relative position of the gear wheels and levers when the deck is in the "CASSETTE DOWN" position.

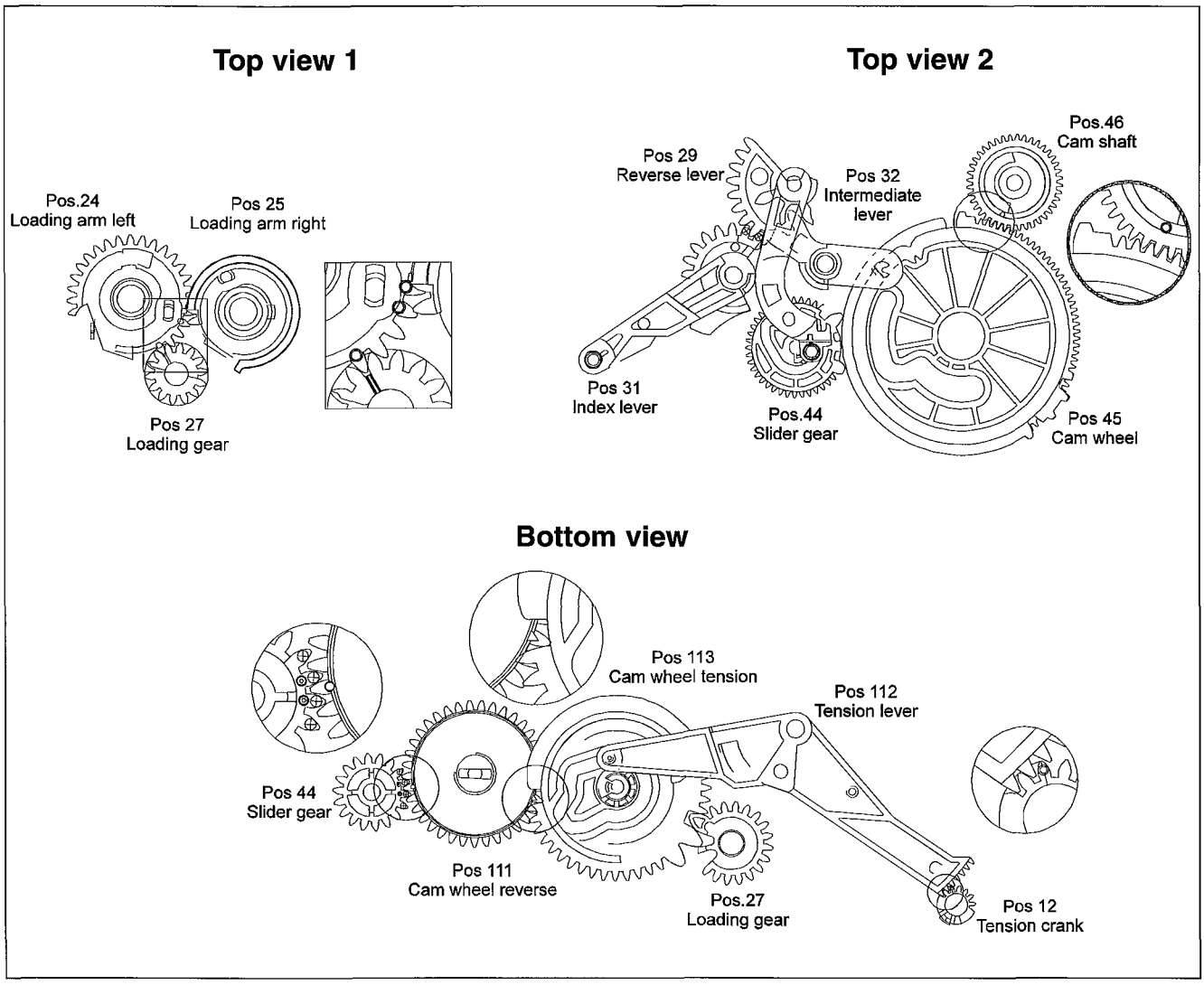

B. SERVICE FIXTURES AND TOOLS

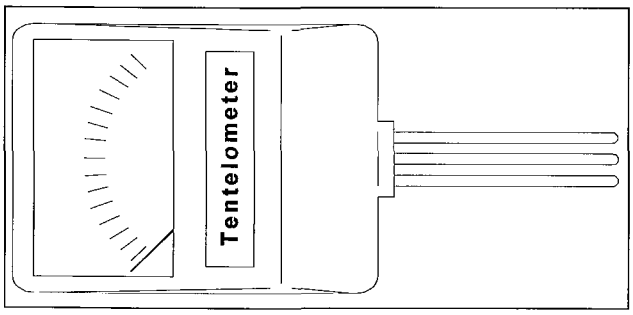

Tentelometer. R4822 395 90584

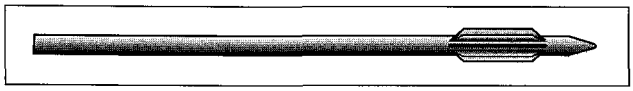

Tool for tape tension adjustment: R4822 395 50188

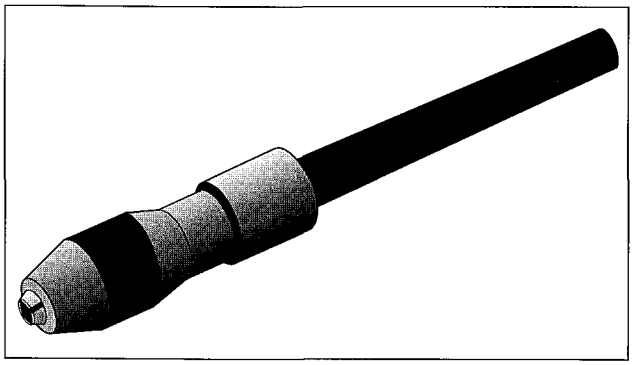

Handle. R4822 256 90493

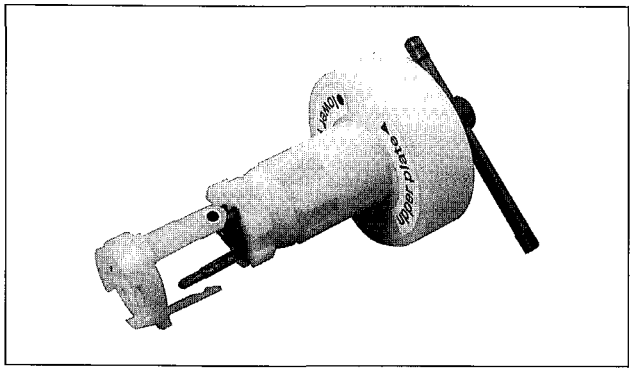

Tool for removing head disc: R4822 395 90977

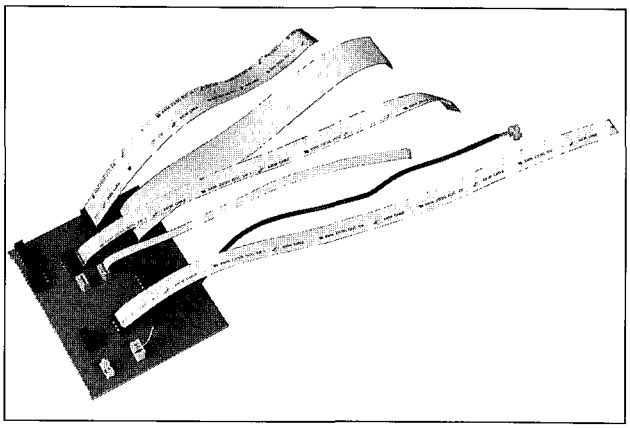

Deck extension cable kit: R4822 321 62609

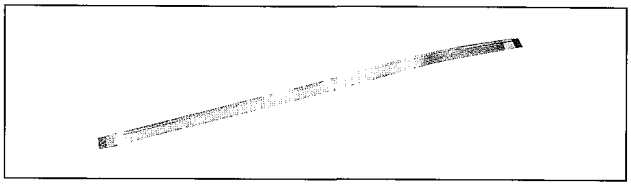

Audio/CTL head extension cable.
R4822 320 11223

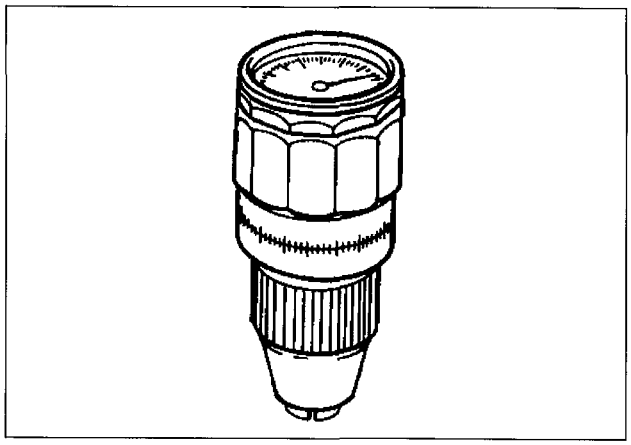

Torque meter 600gf/cm. R4822 395 90232
Torque meter 90gf/cm: R4822 395 80196

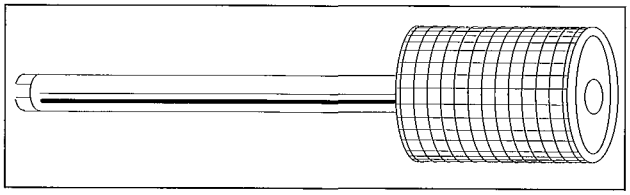

Post adjustment screwdriver: R4822 395 50275

VHS alignment tape: R4822 397 30103

Nylon gloves: R5322 395 94022

Torx screwdriver: T8

Torx screwdriver: T10

NOTES

C. CIRCUIT DESCRIPTION

1. LARGE SIGNAL BOARD

1.1 Switched-mode power supply

Typical specification:

• Supply voltage:	196 - 265 V_{rms}
• Maximum output:	130 W
• Operating frequency:	30 or <85 kHz S0PS
• Efficiency:	80 % at max. output
	all outputs are short-circuit proof

1.1.1 Functional principle (Blocking Oscillator principle)

During the conductive phase of the switching transistor, supply energy is transferred into the transformer. This energy is passed to the load in the blocking phase. Using the switch-on time, the energy transferred in every cycle is regulated in such a way that the output voltages are unaffected by load or supply voltage changes. The integrated circuit MC44603 controls the power transistor (7310).

1.1.2 Description of different load operations

No-load
Switched-mode power supplies require a minimum load for stable oscillation. The GSPD is designed in such a way that, with the wiring harness unplugged, the load is drawn automatically in the power supply and the power supply does not enter the "BURST-MODE".

Control range
The control area offers two operating conditions: The fixed-frequency mode (stand-by mode, timer record) and the TV mode. In the fixed-frequency mode (P_{in} < 35W), the power supply oscillates at a constant frequency of 30kHz. In the TV mode (P_{in} > 40W), the power supply is in the SOPS with a max. frequency of 85kHz. In this case, the pulse duty factor is constant and the frequency decreases with increasing load. The load is controlled by the switch-on time (switch-on time = 1/frequency•pulse duty factor). The load has only limited effect on the output voltage.

Reversal point
At this point of the output characteristic, maximum output is transferred.

Overload
The power supply operates in "BURST-MODE". The energy is limited in every cycle, so that the output voltage decreases.

1.1.3 Circuit description

Interference generated in the power supply is kept out of the mains by a filter around coil 5311. The supply voltage is rectified by bridge rectifier 6313, 6314, 6315, 6316 and filtered by the electrolytic capacitor 2315. The electrolytic capacitor 2335 is loaded via 3331 and supplies IC 7310 with voltage during the start-up phase. After the start-up phase, the supply is taken over by transformer coil 3-4 via components 2336, 3341, 6334.
The power transistor 7330 is the power supply switching transistor.
Whilst the switching transistor is switched on, current flows from the rectified supply voltage through the primary coil of the transformer, the transistor and shunts 3334, 3335 to ground. As the positive voltage at pin 7 of the transformer is constant (for this exercise), the current rises linearly and forms a ramp, depending on the supply voltage and the inductivity of the primary coil. A magnetic field, representing a certain energy, forms inside the transformer. The secondary voltages are polarized in such a way that the diodes are non-conductive.
The voltage decreasing at shunts 3334, 3335 is checked and upon reaching a certain value, depending on the control voltage at pin 14 of the IC, the switching transistor is switched off. The value of resistors 3334, 3335 is used to determine the maximum transferable power. Once the switching transistor has switched off, no more energy is transferred into the transformer. The inductivity of the transformer now attempts to maintain the current which flowed through it at a constant level (u=L*di/dt). The current, however, decreases, di/dt becomes negative, and the polarities of the voltages at the transformer reverse, causing a current to flow through the secondary coil of the transformer, the diodes, the electrolytic capacitors and the load. This current is also ramp-shaped (but reducing).
The switched-mode power supply is controlled by changing the conductive phase of the switching transistor so that either more or less energy is transferred from the supply to the transformer. The voltage of transformer coil 3-4 is used for regulating the voltage. The voltage is filtered by 3347, 2338, rectified by 6335 and 2337, passed to the voltage divider consisting of 3356, 3363, 3357, 3358 and 3362 in a smoothened condition, and finally arrives at pin 14 of MC44603P (7310). This pin leads to an amplifier in the IC whose amplifying characteristics are determined by components 2323, 2324, 3324 and who compares the voltage to an internal reference voltage of 2.5 V. The resulting value changes the level with which the voltage at pin 7 of the IC (the image of the primary current) is compared. Components 2331-3314 (or 3345 or 3336) and 6332-2332 limit the voltage peaks at the turn-off time (snubber network). Overswingers occurring in voltages and currents are caused by the parasitic leakage inductance in the transformer.

After plugging in the power supply, capacitor 2335 is charged via resistor 3331. Once the voltage at pin 1 of the IC 7310 has reached approx. 13V, the IC starts by setting the internal voltage and current references - the values of which are determined by resistor 3330 - and by the oscillator beginning to oscillate. The frequency is determined by capacitor 2327, which is charged or discharged via constant-current sources and the voltages at capacitor (VCT) consequently show ramp-shaped changes between 1.8V and 3.6V. During the loading phase, the MOSFET 7330 is switched on (Vosc), regulated by the feedback loop and switched off during the discharge phase (see Fig.1).

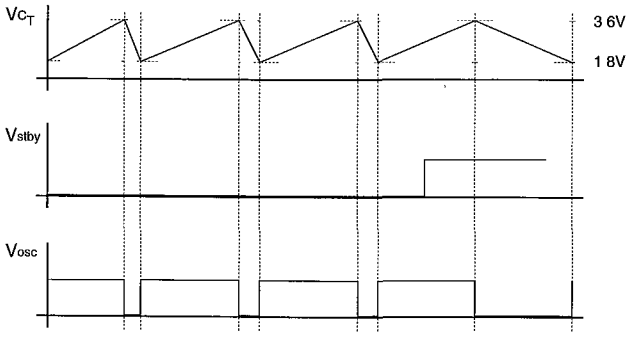

Fig 1

The protective circuit at pin 11 is an option of the IC. Using the 2320, the start-up phase is carried out with shortened pulses (output) to avoid noise generation (see Fig.2).

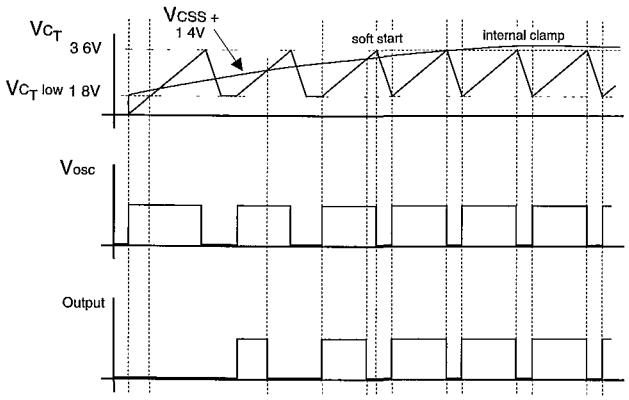

Fig.2

In the stand-by-mode (Vstby=high) the discharge current of the 2327 is reduced by the 3328 and the switching frequency is consequently decreased. The output at which the change-over to the stand-by-mode occurs is determined by resistor 3327 (see Fig.1). In the stand-by mode, the 5A and 5D voltages are lowered by transistors 7351-7352 to a voltage of below 0.7 V.
The output pin 3 is a push-pull stage. The switch-on current of the MOSFET is limited by resistors 3333, 3338 and the switch-off current by resistor 3333 only.

On the secondary side, ten voltages are available, which are rectified by 6361, 6371, 6372, 6373, 6351, 6374, 6392 and filtered by 2362, 2373, 2374, 2392, 2379, 2352, 2392. 5361, 5363, 5373, 5371, 5372, 5352, 5374, 5353, 5362, 5351, 5366, 5369, 5375, 5370, 5365, 5364 are RF filter coils which block interference caused by the clock frequencies of the µCs.
The Ustby, 5A and 5D voltages are additionally stabilized by voltage regulator 7350. The desired voltage values are set with resistors 3351, 3352. Whilst the device is in stand-by mode, voltages 5A and 5D are switched off via MOSFET 7352.

Overvoltage
MC44603P 7310 has overvoltage protection. When the voltage at pin 1 exceeds 17V the output stage blocks.

Overtemperature
The MC44603P (IC7310) also has an overtemperature sensor, which blocks the logic in case of excessive chip temperature. A renewed start-up is possible once the temperature has dropped. To reactivate the power supply, unplug the supply and then plug in again.

1.2 Large signal processing

The small signal board contains the TV-IC TDA8363/N5 IC7200, in which the following functions, which are of importance for the large signal board, are integrated:

- the sync disconnection
- the horizontal oscillator
- the phase comparison between the horizontal oscillator and the horizontal flyback
- the vertical oscillator
- the phase comparison between the vertical oscillator and the vertical flyback

The horizontal oscillator drives the end-of-line stage consisting of control transistors 7587-7584, driver transformer 5580, line transistor 7583, a horizontal deflection unit and the line transformer 5550 via the HDR signal (plug 1922 pin 4).

The rectangular signal generated at the small signal board by IC7200 pin 37 is passed to the driver transistor 7587. The rectangular signal is amplified by transistor 7584 and passed to the drive transformer 5580. This generates current pulses for line transistor 7583, which is conductive during the second half of the line flyback. During the first half, a diode integrated in the housing of transistor 7583 is conductive. Capacitor 2586 is the flyback capacitor. The S-correction (for horizontal linearity) is carried out via capacitor 2584 and linearity coil 5510.
In the 20" and 21" sets, the R/C/D combination 3587, 2587, 6582 compensates the Mannheim effect. The line transformer [5550] generates the line deflection and the high voltage required for the picture tube. The component combination coil 5590, resistor 3590, capacitor 2589 is installed in series to the line transistor to suppress parasitic oscillation (b-ringing).

The horizontal flyback is divided down from approx. 900V by resistors 3597, 3594, 3595 and returned to the small signal board or IC7200 pin 38 via transistor stage 7585.

The vertical oscillator drives the vertical output stage (IC7510 and vertical deflection unit) via the VDR signal.

The current for the vertical deflection unit is generated by output stage IC7510. From the vertical oscillator of the TV-IC (IC7200 pin 43), the saw-tooth signal is passed to inputs 1 and 3 of IC7510. The current, available at output pin 5, passes via the vertical deflection coil and coupling capacitor 2518, which blocks the DC component, and via the shunts R3525-R3559. Components R 3517 and C2516 damp down the vertical coil and filter the line residue created by crosstalk of the horizontal and vertical coils in the deflection unit. Using R3523, the vertical amplitude and consequently the picture height can be set.
Potentiometer 3524 (V-SHIFT adjustment) and components 7578, 3578, 3579 and 3529 are used to correct the vertical picture offset introduced when mounting the deflection unit on the picture tube (mounting tolerances).
As a parabolic-shaped voltage is present at C 2518, a part of it is integrated by C 2520, R 3522 and thus an "S-shaped" current is generated for equalization similar to horizontal correction.

The line transformer 5550 not only generates the high voltage with focus and grid-2-voltage, but also the heating voltage, the 25V (29V) auxiliary voltage to supply the vertical output stage and the 180V for the RGB output stage.

The mean beam current is detected via the voltage of root capacitor 2551 and is fed via the BCI signal to the small signal board which uses this to control the contrast and the vertical picture amplitude. Resistor 3551 limits the voltage level. Resistor 3590 compensates the influence of the beam current, deflection current and high voltage on the picture geometry.

1.3 Protective circuits

The protective circuit for non-permissible operation of the picture tube is arranged around transistor 7550. The following two conditions can occur at connector 1923 pin2:

- High >3.5V normal operation
- Low <1.5V the protective circuit is active; the µC sets the MONI output to High; the picture tube is switched off; the device is set to stand-by.

• beam current too high (approx. 1.5 - 2mA)
The voltage created at capacitor 2551 is a guideline for the medium beam current and is negative for currents of >1mA. From approx. -18V, diodes 6550, 6551 and 6552 become conductive. The voltage at pin 2 of 1923 decreases to a value of < 1.5V; the protective circuit is activated.

• excessive high voltage
The voltage at the auxiliary coils 10/9 of LOT 5550 rises linearly with the high voltage and is used for activating the protective circuit. Essentially, diodes 6553, 6556, the Zener-diode 6554 and resistor 3554 determine the operating point at which transistor 7550 becomes conductive and lowers the voltage at pin2 1923 to value < 1.5V.
High voltages at which the protective circuit is activated:

- 14" approx. 29kV
- 20" approx. 30.5kV
- 21" approx. 30.5kV

• Vertical stage fault
In case of a vertical stage fault, pin7 of the vertical IC 7510 becomes "High". Transistor 7550 becomes conductive; the protective circuit is activated.

Possible faults

- Short circuit or open circuit on vertical deflection coil.
- Voltage at pin 8 (7510) < 1V due to a defective component in the vertical stage

1.4 RGB output stage

At the picture tube print, the RGB signals of the small signal board are invertedly amplified via TDA6103Q and arranged in the DC position corresponding to the picture tube. The RED STAGE has a fixed amplification and the G and B signals are passed to the respective amplification stage via controllers 3921, 3919. This sets the output amplitude in relation to R output amplitude in such a way that the desired color temperature is achieved for the individual picture tube during white image. Using the cut-off regulators 3903, 3918 and 3906, the DC position of the amplifier output signals can be shifted. The differences of the cut-off points (start of beam emission) of the individual picture tube color cannons can be compensated in this way.

Using transistor 7902 the switching stage discharges picture tubes, operated without discharge resistor (bleeder resistor in the line transformer), to prevent after-glow of the screen in the dark when switching off the device. The rectified and filtered heating voltage pulses connect transistor 7902 during normal operation, thus blocking transistor 7901 (not effective). On switch-off, the heating voltage pulses disappear, transistor 7902 blocks after a short time, making transistor 7901 conductive and pulling the reference voltage of the RGB amplification stage to ground. The picture tube is thus completely modulated and discharged. As no focus voltage is present, a diffuse luminous point appears on the screen. The tube in the 21" sets isn't discharged.
To darken the screen immediately after switch-off, capacitor 2910, which is charged to +180V during operation, supplies a negative voltage to the picture-tube's grid 1, therefore blocking it.

2. SMALL SIGNAL BOARD

2.1 General Overview

The KSP (Klein Signal PAL) contains the following stages:
- Control Unit
- VPS / PDC
- Deck Electronic
- I/O-Part
- Audio Linear
- Power Amplifier
- 12V Supply
- VCR Signal Processing
- Tuner 1 and IF 1
- Tuner 2 , IF 2 and demodulator 2
- TV Signal processing
- TV Synchronisation
- Teletext

2.2 Control Unit

TCO: Toshiba COntroller TMP87CS39N-Mask
TMP87PS39N-OTP

The microcomputer (µC) IC7801 is the main component in the control unit and takes over the following functions with the corresponding functional groups :

- Evaluation of the keyboard matrix
- Decoding of the remote control commands from the infra-Red receiver IC7811 or 7812
- Ceramic resonator (8MHz used as system clock)
- Adjustable crystal clock for internal µC timing and time generation (32,768 kHz)
- 8MHz crystal clock (also used as system clock)
- Integrated RAM for storing time, timer date etc... in case of power fail (8 hours)
- 3 lines serial interface (CLKD1, DATD1 and DATD2) to communicate with the TVC
- I^2C bus interface (SDA pin 56, SCL pin 55) to control:
  - the tuner (1701/2, 1301),
  - the PDC/ VPS decoder (7840)
  - the EEPROM (7813)
  - the Teletext decoder (7881)
  - or the Teletext /VPS/PDC decoder (7880)
- Control of Timer, Record and Stby Leds via pin 28, 29, 30 and 3
- Detection of the AFC signal from the frontend to guarantee an optimum signal reception
- Generation of the switching signals for multistandard frontends:
  - SB1_1 pin 63
  - IPSS1 pin 5
  - SB1_2 pin 54
  - PSS2 pin 3
- Generation of the switching signals for multistandard soundfilters (IMNT1 pin 2, MNT2 pin 6)
- Generation of the switching signals for multistandard signal electronic (CSI pin 10) and for Middle East Secam (MES pin 10)

In case of a power failure shorter than 8 hours, the 0,22F gold capacitor C2806 at pin 64 of IC7801 supplies the RAM.
The diode D6801 prevents C2802 from discharging. During this period, a Low level is present at pin 48 of IC7801 and all the IC's functions are switched off by software (e.g. the 8MHz crystal stops running) and the µC is in "Power Down Mode".
Only the clock of the set remains, because of the still running 32,768 kHz crystal. After 8 hours of power fail, all the µC functions are stopped (Stop-Mode) and the RAM will be cleared after a POR.
Important datas such as adjustment values of the set, date, preset-datas etc.. (which should never be cleared) are stored in a 8k bit EEPROM (IC7813).
A reset pulse on pin 47 of IC7801 will restart the system (e.g. power-fail is over).
The control µC also generates PWM signals, which are integrated by single R/C networks to control Volume, Sharpness, Contrast, Brightness, Saturation and TINT (for NTSC Pb only) in the set.

The PROT Signal (PROTection Signal) is used by the µC to detect adverse high-voltage in the picture tube. In that case the µC switches off the set via the MONI Signal (MONItor Signal).

The IF_ID signal from the TV IC (TDA 8361, IC7200) is fed, after a level adaptation from 8V to 5V, to pin 4 of the Control µC to detect a video signal coming from the antenna.

The Control µC also generates RED, GREEN, BLUE and BLANKING signals for OSD. They are fed directly to the TV IC (IC7200, TDA8361/62).
The Vertical and Horizontal synchro signals are necessary for the OSD. They are elaborated, by means of comparators, from the HFB/SC signal (Horizontal- Flyback/ Sandcastle).

2.3 VPS/ PDC Decoder:

To decode the VPS and PDC datas, the following versions of IC7840 are used:
SDA 5642-5 VPS only
SDA 5649 VPS and PDC
VPS datas are located in the line 16 of the video signal whereas PDC informations are sent within the TXT informations (lines 11 to 15 and 19 to 21).
Decoded datas are used for program name, ATS and timer record control.
In one Tuner only versions, the Teletext IC SAA 5281 (pos.7880) is used to decode both VPS and PDC datas.

2.4 Deck Electronic

2.4.1 General

TVC: Toshiba Video Controller TMP91C242N-Mask
TMP91P242N-OTP

The TVC (IC 7410) is a one chip microcontroller (µC) containing:
- 16k byte ROM
- 320 byte RAM
- 8 bit Analog to Digital Converter (ADC)
- Serial Bus interface (2 channel)
- Two 12 bit PWM outputs
- One 8 bit PWM output
- Composite sync input
- Special servo inputs

8 analog inputs are available. The input signals are fed to the ADC via a multiplexer. The resolution of the converter is 8 bit. The maximum permissible input voltage is ranging from 0 to 5V (defined by the reference voltages AVSS and AVCC).
Three analog outputs (PWMs) are available; two with a resolution of 12 bit used for Drum and Capstan Motors and one with a resolution of 8 bit to control the Loading motor. These outputs are supplying constant frequency signals (around 21,5 kHz) with a variable duty cycle.

The Deck µC also generates several signals to control the:
- I/O part: VS1, VS2, RS1, RS2, OS1, OS2
- VS part: FMSW, DO, IPBV, ITRICK, HSC CKPAL, CROT, HP1, FFP, LPV, INTSC, IREC
- AL part: LPA, IPAL, MTA
- TV part: IPBV, I/E, INTSC

2.4.2 Deck interface SAA 1310

CTL stage
The SAA 1310 (IC7411) contains a write/read stage for the CTL track, allowing the possibility of an interference free overwriting of an existing CTL track (e.g. if another index code has to be written on the tape in Play mode).
The playback stage is equipped with a "digital" two-stage AGC. This logic circuit identifies the size of the output signal supplied by the CTL head and, by means of comparators, selects the best amplification ratio for the playback stage.

Note: The playback signal follows the law of induction ($d\varphi/dt$) and is therefore largely proportional to the tape speed. It can therefore vary considerably from Vmax in the FAST SEARCH mode to Vmin in the LP mode (which is the slowest tape speed).

To ensure that, under the above mentioned conditions, the pulse-interval ratio of the tape sync is always correctly reproduced, the amplifier shouldn't be overdriven.
The two-stage AGC alone can't cover the large dynamic range of the input voltage. Therefore the amplifier is equiped with an internal low pass filter (f_c = 3kHz typ.).

The amplification is also further reduced in all the winding modes by means of transistor T7403.
In this case, the WIND signal is "Low" and T7403 is disabled. The transistor is deliberately polarity inverted, as the inverse operation has better damping qualities for this application. If T7403 is disabled, the amplifier's feedback loop and the external resistor R3480 are also disabled. Alternative short-circuit of R3480 with T7403 permits to reduce the amplification in the proportion

$$g_{on} / g_{off} = 1+R3480 / 100$$

The R/C cell C2451 and R3482, connected in parallel with the CTL head, causes together with the CTL head's inductance a resonance step-up around 8 kHz.
R3482 makes a steep fall of the frequency transmission characteristic beyond resonance, providing an efficient suppression of high frequency stray pickup.

The CTL head signal's amplitude in SP mode is around 1 to 2 mV_{pp}. Therefore the gain of the playback amplifier has to be suitably high. To avoid offset problems, a 47µF electrolytic capacitor (C2450) is inserted in the negative feedback branch for DC decoupling. Together with the internal 100Ω feedback resistor, this electrolytic capacitor acts as a high pass filter. It must be of sufficient capacity to ensure that the differentiating effect is beyond a cut-off frequency, where the distortions of the signal shapes at the lowest tape speed rates remain negligible. Otherwise overshoots could occur after each change of magnetisation on the tape, resulting in faulty triggerings of the internal logic and therefore in faulty sync signals.
The polarity of the playback amplifier can be reversed by the Capstan REVerse (CREV) signal. This enables the TVC to always see the correct sync. edge independently of the tape direction.

The W/R (Write/Read) signal is used to switch over between record and playback:
- W/R "high" ⇒ Record
- W/R "low" ⇒ Playback.

The SYNC line on pin 16 is a bidirectional line.
In recording mode, a squarewave signal with a period of 40ms is generated by the TVC and fed to the CTL IC on pin16. The recording amplifier in the SAA1310 converts this voltage into a recording current around ±2mA.
In play mode, the corresponding sync signal from the tape, preamplified by the CTL-stage in the SAA1310, is output on pin16 and fed to the TVC.

The SAA 1310's pin 3 is the buffered output of the IC's internal 2.5V reference (±0,1V).

POR Generation (Power On Reset)
The POR generator in the SAA1310, requires only one external component: capacitor C2454. It defines the length of the POR pulse. For 33 nF, t_{por} is about 30ms.
The threshold sensivity is between 4,5V and 4,8V. Notches of supply voltage, shorter than t_{por}/100 and not under 3,5V, dont activate POR.

Sensor interface
Four comparators in the SAA1310 are used to convert the analog signals onto logic levels. Two of those comparators have open collector outputs (pin 11 and 13), which can source a current of 100 mA. The outputs are overload protected by a current limiter and thermal shutdown.
Only the non-inverting input of each comparator is accessible from the outside. The other inputs are connected to an internal reference voltage of 2.5 V. The hysteresis of the comparators is set internally to 10mV.

The following sensors are evaluated:

FTA (Threading Tachometer)
Comparator 1 (In pin 5; Out pin 15)
This signal comes from a forked light barrier in the deck. An infra-red light beam is interrupted by a four-blade impeller (butterfly). The output amplitude of the sensor has to have a minimum variation of between 2V and 3V to ensure correct evaluation. By means of R3484 and R3489, an additional hysteresis is obtained.

WTR (Winding Tachometer Right)
Comparator 2 (In WTR/pin 6; Out WTRD/pin 14)
This signal comes from reflected light beams. The minimum output requirement is the same as for FTA.

WTL (Winding Tachometer Left)
Comparator 3 (In WTL/pin 7; Out WTLD/pin 13)
This signal is an option needed for the turbo functions. It works like the WTR stage.

FG (Capstan Tachometer)
Comparator 4 (In FG/pin 8, Out FGD/pin 11)
The FG signal comes from the sensor preamplifier located in the motor unit via the sensor print on the tape deck. The amplitude of this near sinewave signal is around $1V_{pp}$. The minimum acceptable level being $300mV_{pp}$. The signal is AC coupled via C2415. Therefore the input pin 8 is connected to the reference voltage pin 3 via the resistor R3483. C2453 wired in parallel with R3483 is used to avoid HF noise.

2.4.3 Interface to the Head Drum Motor Driver

The Head Drum Motor's driver IC (TDA5140) is located on the head amplifier print. It is connected to the Small Signal Board via connector 1904. The following signals are exchanged:

REEL: Speed and phase control signal. (14 Bit resolution).
PG/FG: Combined Position and Speed signal (comes from the TDA5140).

The current consumption on the +14M2 line is typically 70mA and rise up to 0.5A when starting.

2.4.4 Capstan motor Interface

The link to the Capstan motor on the tape deck is done via the connector 1905.
CAP is the CAPstan speed control signal, which varies without load between 0 and 5V. By means of CREV (Capstan REVerse) the direction of the motor rotation can be changed. The CREV signal is fed via a resistor (diode optional) to the motor's driver, preventing latch-up (otherwise the current limiter fails).
The maximum current consumption is limited to 1A. The typical value in play mode is around 0.2 to 0.3A.
The Capstan tacho FG is directly fed to the sensor interface. It comes from a Hall sensor and is preamplified on the Capstan motor print.

2.4.4 Loading motor driver

The Loading motor's driver uses a bridged dual power op amp (IC7402, L2722). This IC can supply an output current of ±1A. All the outputs are protected by diodes (fly-back diodes).
Between the IC outputs (pin 1 and 3), a "Boucherot" circuit (1.5Ω/100 nF) suppresses a 3MHz spurious oscillation from the power amplifier. The output current is limited by the loading motor's impedance (typ. 18Ω) in case of starting or blocking.
One half of the bridge is controlled via the TMO line and works as a comparator. The other half is an amplifier-integrator with a 3.9 gain. An input voltage variation (THIO) between 0 and 5V causes an output voltage variation ranging between 0V and nearly V_{SUPPLY} . In case of 50% of modulation (THIO = 2,5V), there is approx. 7V on pin 3.
C2432 integrates the 21,5kHz PWM signal.
The polarities of the comparator (non inverter) and of the opamp (inverter) are selected as follows:
- During a Power On Reset, the TVC sets the THIO line to "Low", whereas TMO is set to "High". These polarities must be observed to ensure that no current is applied to the motor during a POR period.
- In case of a loss of the 5V supply, a separate reference divider is used for the comparator section (3450/3451). Both outputs of the L2722 are then in common mode, therefore protecting the motor.

2.4.5 Tape End-Start LED Control

The LED current is controlled by transistor T7490. The ON time is approx. 1ms with an ON/OFF ratio of 0,09.
C2490 slightly attenuates the slopes to avoid interferences with the signal electronics.
The LED current is max 75mA and supplied by the +14M1.

2.4.6 Analog interface to the TVC

The following analog signals are send to the TVC's internal Analog to Digital Converters :

TRIV	Tracking Information Video Video enveloppe information.
TAE/TAS	Tape End / Tape Start detection
I/R	Init and Record protection Both informations are combined.
AGC	Automatic Gain Control Field intensity of the received channel.

2.4.7 Sensing of the Tape Deck switches

Two switches are available:

INIT	initialisation switch
RECP	record protection

The signals from these switches (High or Low levels) are combined together by a resistor network, in order to obtain a single line sent to an analog input of the TVC (pin 54). Each possible switch combination will result in a unique voltage level on the I/R line.

2.4.8 CMT detection

The CSYNC signal, coming from the VS part, is sent through an integrator. The integrated synchro, CSYNC1, is sent to pin 12 (port 33) to detect the 50Hz.

2.5 I/O Part

2.5.1 Record Selection

In record mode, the I/O circuit operates the selection between three different sources:

1 tuner sets:	SCART, CINCH and frontend 1.
2 tuners sets:	SCART, CINCH and frontend 2.

The Audio and Video signals are selected in IC7592 (HEF 4052) controlled by RS1 and RS2.

- SCART Video input is passed through the switching diode D7512 to pin 14 of IC7592.
- SCART Audio input is passed through the emitter follower 7504 to pin 2 of IC7592.

CINCH Video and Audio signals are coming from either the front cinch plug or the plug print via 1918.

- CINCH Video input is passed through the switching diode D7514 to pin 15 of IC7592.
- CINCH Audio input is passed through an emitter follower 7505 to pin 2 of IC7592.
- Frontend1 Video VFV1 is passed through an emitter follower 7503 to pin 1 of IC7592.
- Frontend1 Audio AFV1, from pin 1 of IC7200, is passed through an amplifier T7703 to pin of IC7592.

The emitter follower and the diode are biased by resistor R3517.

2.5.2 View Selection

The View selector IC7591 (HEF4052) selects between 4 sources: and send the result to the TV-part:

- SCART
- Cinch
- Frontend 1
- Playback signal

The selection is sent to the TV part. It is controlled by VS1 and VS2.

- SCART input video passes through diode 6513 to pin 14 of IC7591,
- SCART input audio is fed to pin 5 of IC7591.
- CINCH input video passes through diode 6515 to pin 15of IC7591,
- CINCH input audio is fed to pin 2 of IC7591.
- Frontend 1 video (VFV1) is sent via emitter follower 7507 to pin 12 of IC7591,
- Frontend 1 audio (AFV1)is sent to pin 1 of IC7591.
- Playback video (VP), coming from the VS part, is fed via the emitter follower 7506 to pin 11 of IC7591,
- Playback audio (AMLP), coming from the AL part, is sent to pin 4 of IC7591.

The diodes and emitter followers, of the videosignal path, are biased by resistor R3526.

2.5.3 SCART Output Selection

The output selector IC7593 (HEF 4052) operates the selection between 3 signal sources:

- Frontend 1
- Frontend 2
- Video+Audio from the TV part.

The selection is sent to the SCART plug (pos. 1915)

- VFV1 is sent via the emitter follower 7502 to pin 14 of IC7593.
- AFV1 is sent to pin 5 of IC7593.
- VFV2 is sent via the emitter follower 7501 to pin 12 of IC7593
- AFV2 is sent to pin 1 of IC7593.
- VTV is sent to pin 11 of IC7593
- ATV to pin 4 of IC7593.

The Video signals outgoing from pin 13 of IC7593 are 6dB amplified (T7500, T7508) before being sent to the pin 19 of the SCART.
The Audio signals outgoing from pin3 of IC7593 pass through an emitter follower (7509) before being sent to the pins 1and 2 of the SCART.

2.5.4 RGB SCART input

The RGB input signals from the SCART can be sent to TV IC (TDA8361).
The signals:

- 8SC (switching pin8 SCART),
- BLUE, GREEN, RED
- BLSC (blanking SCART)

are fed to the TV part.
R, G, B signals coming from the SCART and R, G, B signals coming from the OSD are selected in IC 7260 (HEF4053) controlled by BLOSD (blanking OSD).

The Zener diodes, present on all inputs and outputs, are used for ESD protection purpose.

2.6 Audio Linear

In all modes, except Playback, the Linear Audio signal source is either the SCART input or the demodulated frontend signal carried out at pin 1 of IC7200 (TV IC TDA8361/62) via a deemphasis (C2718) and an amplifier T7703.
The source selection is done by IC7592 (HEF4052) which feds the audio signal AMLR (Audio Mono Linear Record) to pin 11 of LA7282 (IC7601) to an ALC stage (Automatic Level Control).
The signal then passes a record/playback switch, an amplifier and some mute stages and arrives on pin 13 of IC7601. This is the output pin to the line frequency notch filter built around IC 7608 (TL072).
The attenuator chain, on pin 13 of IC7601, sets the necessary levels for the ALC detector (time constant: pin 10), the recording amplifier and the pre-emphasis circuit (L5601, R3616 and C2613).
Pin 17 is the output of the recording amplifier.
In record mode, the recording current is summed with the bias current and flows through the head back to the pin 2 of IC7601 where it is grounded by an internal switch.

In playback mode, the switch on pin 1 of IC7601 is closed. The playback signal is amplified in an equalising stage (time constant between pin 6 and 8 of IC7601).
C2600 and R3601 determine the head resonance in playback.
After being adjusted by R3606, amplified and fed through a mute stage between pin 9 and 13, the Audio playback signal runs through the line frequency notch filter.

In Longplay, the frequency response is adapted by 3 RC networks pin 4, 5 and 15 of IC7601.

The Erase oscillator is built around the well known circuit T7603 and L5603. The oscillating frequency is about 70 kHz. It is used for the erasing heads and for the bias current.
To avoid clicks, the oscillator has to be switched on slowly (switching stage T7604, time constant C2617/R3623, current limiter R3625).

2.7 Power Amplifier

For sets equiped with the View Select function, the audio signal for the output stage is selected by IC7591.
For sets non equiped with the View Select function, the audio signal AMLP goes directly, via the line frequency filter and the sound filter, to pin 3 of the power amplifier IC 7240 (TDA7056B) This IC is a mono BTL output amplifier (Bridge Tied Load), with DC volume control on pin5.
If the DC volume control voltage is below 0,4V, the circuit switches onto a mute mode.
The amplifier is short circuit protected to ground, V_P and across the load. A thermal protection circuit is also implemented.

2.8 12V Supply

The 12 V regulator is stabilised by the Zener diodes D6690 and D6691 and is short circuit protected due to its fold back characteristic.
C2690 is the start up capacitor.
This regulator supplies the linear audio circuit, the tuner (U944C) and the emitter followers and amplifiers in the I/O part.
The circuit also regulates the input voltage for the 8V regulator and protects it from short-circuits.
In stand-by mode, both 12V and 8V are switched off by transistor 7695.

2.9 VCR Video Signal Processing

This stage's main component is IC7051 (LA7437A) which contains all the luminance and chrominance stages.
The CCD delay line, IC7060 (MSM 89973M), is supplied with 5V only.

2.9.1 Record Signal Path

Luminance
The input video signal (VR) arrives on pin 12 with an amplitude around $1V_{pp}$.
It is adjusted in an AGC (time constant on pin 10), passes a 6 dB attenuator, a clamp, a lowpass filter and reaches the vertical emphasis. This stage uses the 1H CCD delay line in IC 7060 (delayed signal available on pin 18 of IC7051).
The video signal leaves the IC on pin 4 and arrives, via the emitter follower 7007, on pin 5. The filter on the base of the transistor isn't active in REC. After pin 5, the clamped signal passes through a detail enhancer, a preemphasis circuit (linear and nonlinear; time constants on pins 6,7,8), the white/dark clipping stage and reaches the FM modulator. The Y FM signal goes out on pin 2 and, via the Y REC BPF, goes to the summing stage T7018 and T7019 and as FMRV to the headamplifier plug 1902.
The sync frequency can be adjusted by R3010.
The loop through path, for the output signal VP, goes via a feedback clamp and an insert stage to pin 16 and finally to the I/O part.

Chrominance PAL
After running through the 6 dB attenuator in the LA7437, the video signal is sent to a 4.43 MHz Bandpass filter, an ACC (Automatic Chroma Control, time constant pin 41), the main converter, a 1 MHz Lowpass filter, a "killer" stage, outputs on pin 38 and, through the chroma record current potentiometer R3029, is sent to the summing stage.

The 5.06 MHz for the main converter is issued from the 5.06 MHz Bandpass filter after the sub-converter in which the 4.43 MHz from the VXO and the 627 kHz from the Line PLL are mixed.

The Line PLL is locked by the synchro pulse coming from the synchro separator. It uses a 321fH VCO (Loop filter on pin 36 and 37). The frequency is then divided by 8 and phase shifted in 4 different 90° phases as required by the VHS standard. The phase shift control is on pin 17.
The Line PLL part also produces the BGP (Burst Gate Pulse) on pin 35.

The VXO is locked by the incoming burst signal via the record APC detector (Loop filter pin 33).

The crystal used requires no adjustment.

Pin 32 also supplies the 4,43 MHz clock for the CCD and the MESECAM detector.

Chrominance MESECAM
A 2,5V voltage on pin 30 forces the IC onto the MESECAM mode. In this case:
- Phase rotation off
- Fixed frequency of the VXO
- Wider characteristic of the chroma bandpass filter.

For the SECAM D/K versions, an optional MESECAM detector (IC 7070) is implemented. The MES signal switches the LA 7437 to MESECAM automatically.
Without the detector, the IC LA7437 can be forced to MESECAM by the signal MES coming from the control µP 7801.

Chrominance SECAM L
For the SECAM L chroma processing, the TDA 4722 is used.
The PAL color killer (CKPAL), on pin 39 of the TDA 7437, decides which color system operates.
The absence of PAL signal means SECAM L. The CSI signal (Colour Standard Information) activates the TDA 4722.
The video signal VR arrives, after being passed through an emitter follower, the HF-cloche (5102) and a 4,3MHz Bandpass Filter, to pin 29 of IC7151.
Inside the IC, the chroma signal is amplified by 15dB, limited and divided by 4. Then it passes a 1,07MHz BPF connected between pin 21 and 19.
At this point, the chroma is blanked during synchro pulses by T7102 controlled by the CSYNC signal.
After a 10dB amplifier, the LF-cloche (5108) and a limiter, the SECAM record current leaves the IC at pin 17 and can be adjusted with R 3027.

2.9.2 Playback Signal Path

Luminance
The FM playback signal (FMPV) passes the FM processing circuit which gives the necessary filter characteristics and is sent to the pin 1 of IC7051.
The resolution is switched to lower values in LP or SECAM by T7009.

The Y FM signal runs then through the FM AGC (time constant pin 10), a double limiter stage, the FM demodulator and a sub Lowpass filter.
Pin 4 is in high impedance state in Play so the connected R/C components act as a linear deemphasis.
After the pin 5, the Y signal is clamped, filtered by a LPF and fed to the noise canceller and dropout compensation circuit.

For both functions, the 1H CCD delay line (IC7060) is necessary. Pin 20 supplies the video to the CCD and pin 18 receives the 1H delayed signal where a VCA (Voltage Controlled Amplifier) automatically corrects the gain tolerances of the CCD.
The 1H CCD works as combfilter for vertical noise reduction and also as line memory for dropout compensation.
After the noise canceller, the video passes the non-linear deemphasis, a horizontal noisecanceller, the picture control stage (sharpness control), the Y/C mixing stage and the video output amplifier. The VP signal outputs on pin 16.

Chrominance PAL
The FMPV signal comes also to pin 38 of IC7051. The 627 kHz Chroma signal from the tape goes through a 1 MHz lowpass filter and an amplifier. It is amplified again, controlled in the ACC amplifier, mixed with 5.06 MHz and goes via 4.43 MHz bandpass and via pin 24 to the combfilter (CCD IC7060) where crosstalk from the adjacent tracks is removed.
The chroma comes back to the IC at pin 26 where it is filtered, checked by the colorkiller stage, fed through pin 29 and 28 to the Y/C mixing stage.

In play mode, the 5.06 MHz frequency is elaborated from the free running 4.43 MHz crystal oscillator and the 321 fH VCO. It is controlled by the Playback APC loop, generating a signal from the outgoing burst and the 4.43 MHz of the crystal.

Chrominance MESECAM
The signal path is the same as in PAL.
The differences are :
- 321 fH VCO locked to sync
- no phase rotation
- Comb filter off
- internal bandpass filter more bandwidth
- no color killer function; the color is always on

Chrominance SECAM L
The SECAM L chroma signal is processed in the TDA 4722. The FMPV signal inputs at pin 23 and, after a 6 dB amplifier, is sent to the 1,07MHz Bandpass filter located between pins 21 and 19. It is 10db amplified and outputs at pin 18 to be sent to the 1.07MHz cloche filter (5108).
The signal is then sent to an AGC inside the IC and goes to a rectifier (x2) before being sent to a 2,14MHz Band pass filter. It is brought back in the IC on pin 8 and sent to a secund frequency doubler, a 10dB amplifier and fed to the 4.28 MHz anticloche filter located between pins 31 and 32.
The 4,3MHz chroma signal passes a colorkiller stage and leaves the IC on pin 1.
After a 4,3MHz Bandpass filter and an emitter follower, the SECAM chroma signal is sent to pin 28 of the LA7437 to the Y/C mixing stage.

2.9.3 General remarks about the LP mode

The FM equalizer's characteristics are modified by means of T7009.
For the 2 Heads sets, color reproduction in LP is only possible in Play.

2.9.4 NTSC-Playback

If a 60 Hz playback signal is detected (INTSC = 'LOW'), the Video Processing IC (LA7437) and the TV IC (TDA8361) are switched to NTSC mode.
In this case, the chroma does not pass through the comb filter.
Also HUE control at pin 27 of IC7200 is active.

2.10 Tuner and IF

2.10.1 Tuner 1

Tuner-section
According to the version, the following PLL Tuners (1701) are used:
- one tuner sets UV916S
  or U944C-IEC for PAL-I
- two tuners sets UV1216D/P, which has a splitter output for the second tuner

The RF amplifiers, the band switching and the local oscillators are controlled via an I²C bus (SCL and SDA pin 13 and 14 of the tuner).
The AGC voltage (Automatic Gain Control) at pin 5 of 1701, coming from the IF detector inside of the TDA8361 (IC7200), controls the RF amplifiers in the tuner.

Supply voltages for UV916S (U944C) are:
- +5VAS (5V) pin 12
- +12A (12V) pin 6
- +33VA (33V) pin 11(varicap voltage for the PLL)

Supply voltages for UV1216D/P are:
- +5VAS (5V) pin 12
- +33VA (33V) pin 11 (varicap voltage for the PLL)

IF-section
The IF characteristics are determined by the SAW filter 1720 and IF amplifier circuit at pin 45 and 46 inside of IC7200.
To match the EN55020 norm in SECAM L/L,' a 40.4 MHz-trap (L5704) is built in.
To match the EN55020 norm in SECAM D/K, a second filter (L9360M, pos.1732) can be switched on with MNT1. This results in a better adjacent channel rejection.
The SAW filter for the AM sound demodulator in SECAM, is located on position 1750 (L9453M).
The switch over to SECAM L´ is controlled by SB1_1 (SECAM Band 1).

Tuner AGC
The AGC reduces the tuner gain when RF signal at tuner input exceeds a certain level.

The AGC voltage comes via pin 47 of IC7200 to tuner pin 5. To generate the AGC voltage inside IC7200, the top sync. level is used. R3712 (AGC1) at pin 49 of IC7200, adjust the AGC (tuner's take over point). The time constant of the AGC is fixed by C2701.

The AGC voltage is negative if the aerial signal increases,or if the AGC voltage decreases.

AFC
The AFC is set via coil L5705 (38.9 MHz).
The AFC voltage at pin 44 of IC7200 is taken from the reference signal on L5705 (AFC).
C 2716 stabilises the AFC voltage.
The SECAM L´ AFC can be adjusted by R3729.

2.10.2 Tuner 2

Tuner and IF-selection
The secund PLL Tuner is located on pos.1301:
- UV916S/PH
- U944C for PAL-I

The electrical specifications are equal for both UV916S or U944C-IEC. The only difference is the antenna plug (cinch). For tuner's description, please see the previous chapter

The IF characteristics are determined by the SAW filter (1320).
To match the EN55020 norm in SECAM L/L' a 40.4 MHz-trap (L5302) is built in.
To match the EN55020 norm in SECAM D/K (better adjacent channel rejection), a second filter (L9360M, pos.1324) can be switched on by MNT2.
The SAW filter for the AM sound demodulator in SECAM is L9453M (1322).
The switching to SECAM L´ is controlled by SB1_2 (SECAM Band 1).

IF amplifier and demodulator IC TDA9800/9812
For the PAL B/G or PAL I versions, the TDA9800 is used (integrated FM demodulator).
For the multistandard versions (PAL B/G and SECAM L) the TDA9812 is used (FM and AM demodulator).
Both ICs are PLL demodulators. The integrated VCO works at double carrier frequency and can be adjusted via the coil L5303. The loopfilter is connected at pin 6 or pin 5 for the TDA9812.
The VCO voltage is used to generate the AFC voltage at pin 15 or pin 20 for the TDA9812.
The demodulated video signal, internally filtered by a 12MHz Lowpass filter, arrives on pin 13 (or pin 18 for the TDA9812) with an amplitude of $1V_{pp}$ (AGC).
The sound carrier is removed by the trap 1340, and the 6dB amplified video outputs on pin 7 (or pin 8 for the TDA9812) with an amplitude of $2V_{pp}$.
The IF sound is filtered after pin 17 TDA9812 and is sent, via pin 11 (or pin 15 for the TDA9812), to the FM-PLL sound demodulator.

Pos	PAL-BG	MULTISTD	PAL-I	P/S-DK
1340	TRAP 5 5MHz	TRAP 5 5/6 0 MHz	TRAP 6 0MHz	TRAP 5 5/6 5MHz
1345	BPF 5 5MHz	BPF 5 5MHz	BPF 6 0MHz	BPF 5 5MHz
1346	- " -	BPF 6 0MHz	- " -	BPF 6 5MHz

The audio signal leaves the TDA9800 on pin 9 with an amplitude of 350 mV_{eff} (FM modulation at 1kHz with ±27kHz of deviation) and is amplified by T7309 to 500 mV_{eff}.
When the TDA9812 is used, the signal leaves the IC on pin 10 with an amplitude of already 500 mV_{eff}.
R3341 sets the AGC2 level (pin 3 or pin 4 for the TDA9812).

2.11 Video and Audio Signal Processing (TV part)

2.11.1 Video Signal Processing

After the demodulator inside IC7200, the video passes an amplifier and flows to pin 7. The 2.4 V_{pp} base band CVBS signal is fed, via an emitter follower (T7762), to the sound bandpass filter (1745 or 1746) and to the sound trap filter (1740).

Pos	PAL-BG	MULTISTD	PAL-I	P/S-DK
1740	TRAP 5 5MHz	TRAP 5 5/6 0 MHz	TRAP 6 0MHz	TRAP 5 5/6 5MHz
1745	BPF 5 5MHz	BPF 5 5MHz	BPF 6 0MHz	BPF 5 5MHz
1746	- " -	BPF 6 0MHz	- " -	BPF 6 5MHz

After the sound trap filter the video signal goes via the emitter follower T7216 to pin 13 of IC7200 and to another emitter follower T7215.
After T7215, the video signal flows to the I/O Part and from there to the VCR's signal processing.
After pin 13, the video signal flows to a switch. This switch, controlled by I/E (Intern - Extern), selects the signal source for the TV screen.

After this switch the luminance and chrominance part of the CVBS signal are separated to enable further processing.

The chrominance is filtered out (-20 dB) by a chroma trap (luminance notch filter). The chroma trap is internally calibrated by the subcarrier frequency (4,43MHz) by converting an error current into a voltage on pin 12 of IC7200 (C2227). If the calibration is lost, C2227 holds the correct tuning frequency value.

The luminance signal is fed, via a delay line and the peaking circuit, to the luminance matrix inside IC7200.

Chroma PAL
Inside IC7200, the chroma signal goes via an ACC amplifier and a burst demodulator to the B-Y, R-Y demodulator.
The reference crystal (Q1200) used for the demodulation is located on pin 34 of IC7200. This crystal is also used to calibrate the filters inside the IC7200.

Chroma SECAM
The chroma signal, out from pin 27 of IC7200, arrives on pin 16 of the SECAM decoder IC TDA8395 (7202).
Because pin 1 of IC7200 is 'HIGH' the outputs -(B-Y) and -(R-Y) from the TDA8362 are in high impedance state and the output signals from the TDA8395 are validated.

The demodulated R-Y and B-Y signals, available on pins 30 and 31 of IC7200, are fed to 64µs delay lines in the TDA4665 (IC7201). This IC can be used for both PAL, NTSC and SECAM.
In case of NTSC playback, the voltage on pin 27 of IC7200 is used for TINT control (0-5 V).

After the delay line the signal is fed to a clamp stage inside IC7200, where the saturation (SAT) can be controlled via pin 26. The dematrixing of the -(R-Y), -(B-Y) and Y signals to RGB signals is done after this clamp stage.
The sandcastle pulse coming from the sync. part of the IC7200, synchronises the RGB dematrixing and suppresses the RGB signals during the line and frame flybacks.

The selection between RGBs from the dematrixing or the OSD, or the SCART or the teletext section is performed by the clamp switch inside the IC7200. Switching is realized via the blanking signal (BLOSD) on pin 21 of IC7200.
The contrast (CONTR) DC level on pin 25 of IC7200, controls the Peak White Limiter (PWL).
After the output stages, where the brightness (BRI) can be set via pin 17 of IC7200, the RGB signals arrive on pin 18, 19 and 20. From there, they flow via connector 1913 to the tube PCB.

The contrast, brightness, sharpness, tint and saturation controls are PWM signals generated by the control µC and integrated by single R/C cells.

2.11.2 Sound Processing

The sound signal, still mixed with the demodulated IF signal, outputs at pin 7 of IC7200 and flows via the emitter follower T7762 to a 5,5MHz bandpass filter (1745; refer also to the table § 2.11.1). It is then sent to a mono sound detector at pin 5 of IC7200.
After pin 1 of IC7200, the audio signal goes, via a deemphasis capacitor (C2718) and an amplifier (T7703), to the I/O part as AFV1.
For the multistandard sets, AFV1 can be selected between the audio from pin1 of IC7200 or the audio from the AM demodulator TDA9830 (7754). The switch in the TDA9830 is controlled by PSS1.

2.12 TV Synchronization

2.12.1 Horizontal synchronization

This circuit provides a 15625Hz signal, synchronized by the CVBS signal, to the line output stage.

When the voltage on pin 36 of IC7200 reaches 8 V, the horizontal oscillator begins to run.
The free running horizontal sawtooth generator is synchronized by the horizontal synchro pulses of CVBS signal and converted in a PWM signal available on pin 37 of IC7200.
The horizontal flyback pulse on pin 38, is phase compared with the horizontal oscillator. If the phase isn't correct, the duty cycle of the horizontal oscillator will be adjusted.

The HDR signal (Horizontal DRive), out on pin 37, drives the line output stage.

The time constant of the synchronization circuit is automatically determined by IC7200.

The horizontal position of the picture is influenced by the input DC current on pin 39. It can be adjusted via R3206.

2.12.2 Vertical synchronization

This circuit provides a 50Hz signal, synchronized by the CVBS signal, to the frame output stage.

The vertical synchro separator separates the frame synchro pulses from the CVBS signal and synchronizes the frame oscillator.
Inside IC7200, the phase of the Vertical FlyBack pulse (VFB, pin 41 of IC7200) is compared with the phase from the sawtooth on pin 42 of IC7200. If the phase is not correct, the duty cycle of the frame oscillator will be adjusted until the phase is correct.
If no synchro signal is applied, the frame oscillator keeps running free at 50Hz.
The output signal on pin 43 of IC7200 (VDR: Vertical DRive) is the amplified sawtooth.

2.13.3 Sandcastle

The sandcastle pulse is used to generate the burst, line and frame blanking signals.
Pin 36 of IC7200 is actually both the horizontal sandcastle output pin and horizontal flyback input. The selection is done by the input current:
• Input pin : sandcastle a few µA
• Output pin: Flyback 100-300 uA determined by R3251

The correspondance between the amplitude and the function of the sandcastle pulse is as follows:
- Burst: 5.3 V
- Line blanking: 3V
- Frame blanking: 2V

2.14 Teletext

The Teletext decoding is performed by either the Teletext IC SAA5254 or by the Teletext-VPS-PDC IC SAA5281.

One tuner sets uses the SAA5281 (pos.7880),
Two tuners sets uses the SAA5354 (pos.7881).

The Teletext data frequency (6,93MHz), display timing and line frequency are derived from a 27MHz Colpitts oscillator cicuit.
A data slicer separates the Teletext informations from the Video's vertical blanking signal, which arrives on pin 8 of the IC via an emitter follower 7883.
TXT datas are stored in an internal RAM and converted into RGB signals.
Derived from the line frequency, an artificial synchro pulse is produced and sent to the TV part (STTV).
The output BLANK (BLTXT) makes also subtitles possible.

If the SAA5281 is used (which also decodes VPS and PDC datas), no additional VPS IC is necessary.

D. ELECTRICAL ADJUSTMENT PROCEDURES

1. TEST EQUIPMENT

To perform the electrical adjustments, the following equipment is required.

1. Dual-Trace Oscilloscope
   Voltage Range : 0.001 ~ 50V/Div.
   Frequency Range : DC ~ 50MHz
   Probe : 10:1; 1:1

2. DVM (Digital Voltmeter)

3. Frequency counter

4. Sine Wave Generator · 0 ~ 50MHz

5. Video Pattern Generator

6 Plastic Tip Driver and Non-Metal Driver

7. Isolation Transformer (Variable)

8. VHS Alignment Tape : 4822 397 30103

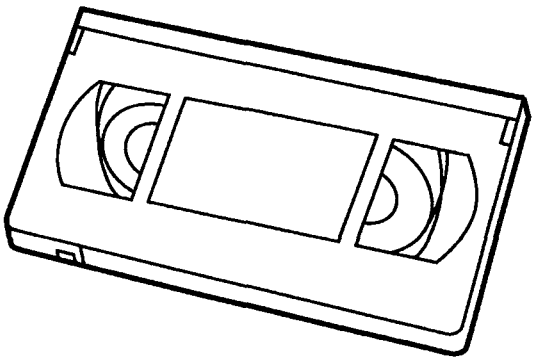

Counter Reading Start	0	0040 ±8	0310 ±12
Video	Blank	B&W Pattern	Color Bars
Audio	Blank	6kHz (mono)	40Hz, 3kHz, 15kHz (Mono & Stereo)

Fig. E1

2. HOW TO READ THE ADJUSTMENT PROCEDURES

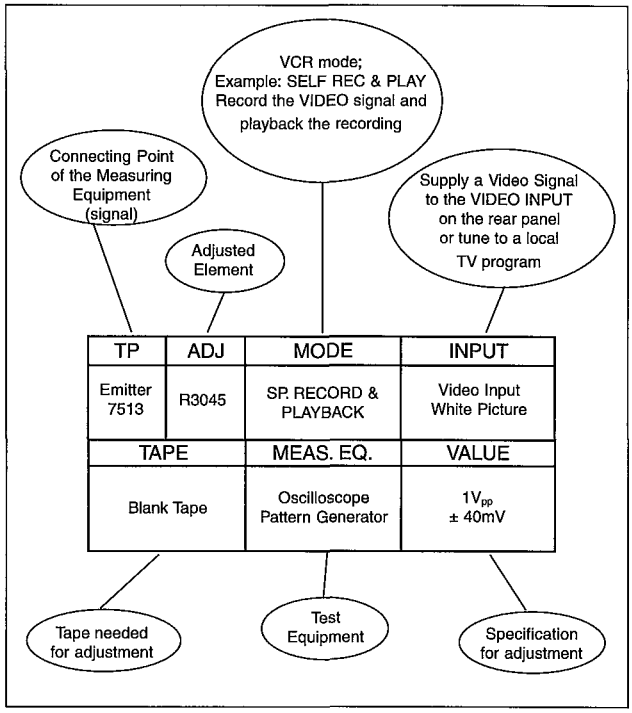

Fig E2

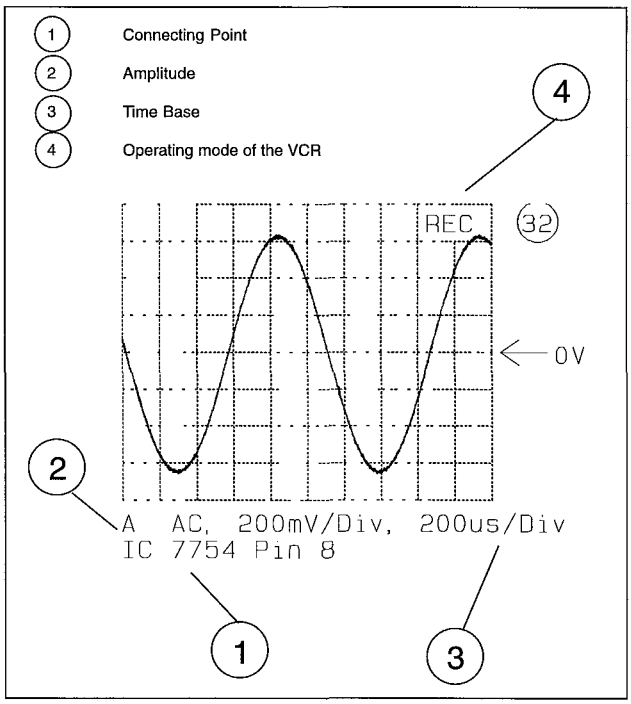

Fig. E3

3. ADJUSTMENT PROCEDURES

These adjustment procedures concern the following sections:

1. Power and Clock Section
2. Tuner Section
3 Servo Section
4. Luminance and Chrominance Section
5. Audio Section
6. TV Main & CRT Section

3.1 Power and Clock Section

3.1.1 Power supply adjustment

Purpose: To ensure correct operation.

Symptom of incorrect adjustment:
The tape and TV functions do not operate correctly.

TP	ADJ.	MODE	INPUT
C2593	R3358	Power ON	SCART input No signal
TAPE		MEAS. EQ	VALUE
		Digital Voltmeter	See description below

Note: C2593 and R3358 are located on the Large signal board.

ADJUSTMENT:
- Set potentiometer R3358 in center position.
- Switch the set onto the SCART plug without any signal.
- Set the Brightness and the Contrast to the minimum value.
- Connect the voltmeter to C2593.
- Adjust potentiometer R3358 in order to obtain the following voltage:
  - 14" tube (36cm): 101.5V
- After the adjustment, reset the Brightness and Contrast to their original values.

3.1.2 Clock adjustment

Purpose: Adjustment to ensure correct clock function.

Symptom of incorrect adjustment:
The clock runs too fast or too slow.

TP	ADJ.	MODE	INPUT
Pin 7 of IC 7801	C2814	E/E	
TAPE		MEAS. EQ	VALUE
		Frequency Counter	122.07µsec ± 0,035µsec

Note: IC7801 and C2814 are located on the Small signal board; Control Section

SET UP:
- Disconnect the set from the mains.
- Solder a 1k resistor between pins 7 and 64 of IC7801.
- By means of a strap, connect pin 28 of IC7801 to ground.
- Reconnect the set to the mains.
- Adjust C2814 to obtain the desired period.

NOTE:
During the adjustment, pin 28 can be disconnected from ground. It is just necessary to have it grounded during the reset time.

3.2 Tuner section

3.2.1 AFC adjustment (Automatic Frequency Control)

Purpose: Proper adjustment of the demodulator AFC circuit.

Symptom of incorrect adjustment:
Bad reception of TV programs.

TP	ADJ.	MODE	INPUT
IC7801 Pin 24	L5705	E/E	38.9MHz 100mV$_{pp}$ ±20mVpp on Pin 17 of Tuner 1701 or 1702
TAPE		MEAS. EQ	VALUE
		DC Voltmeter Sine wave Generator	2.5V ± 0.2V

Note: IC7801 is located on the Small signal board; Control section.
L5705 is located on the Small signal board; TV section.

SET UP:
- Connect pin 5 of tuner 1701 (or 1702 in case of a 2 tuners set) to its pin 16.

3.2.2 Secam band 1 AFC adjustment

TP	ADJ.	MODE	INPUT
IC7801 Pin 24	R3729	E/E	33.95 MHz 100mV$_{pp}$ ±20mVpp on Pin 17 of Tuner 1701 or 1702
TAPE		MEAS. EQ	VALUE
		DC Voltmeter Sine wave Generator	2.5V ± 0.2V

Note: IC7801 is located on the Small signal board; Control section.
R3729 is located on the Small signal board; TV section.

3.2.3 AGC adjustment (Automatic Gain Control)

Purpose: Set the AGC (Automatic Gain Control) level.

Symptom of incorrect adjustment:
The AGC does not synchronize correctly when RF input level is too weak and picture distortion may occur if it is too strong.

TP	ADJ.	MODE	INPUT
Tuner 1701 or 1702 Pin 17	R3712	Set tuned to channel 24	2.2mV (67dBμV) on the aerial input White picture No audio carrier, no audio modulation
TAPE		MEAS. EQ	VALUE
		Oscilloscope Pattern Generator	500mV$_{pp}$ -1dB (PAL) 400mV$_{pp}$ -1dB (SEC) (Probe 10:1)

Note. R3712 and the Tuner are located on the Small signal board; TV section.

CAUTION: Before starting the adjustment, turn R3712 fully counterclockwise (wiper to ground).

3.2.4 AFC adjustment (Tuner 2 option)

TP	ADJ.	MODE	INPUT
IC7410 Pin 61	L5303	E/E	38.9MHz 100mV$_{pp}$ ±20mVpp on Pin 17 of tuner 1301
TAPE		MEAS. EQ	VALUE
		DC Voltmeter Sine wave Generator	2 5V ± 0.2V

Note: IC7410 is located on the Small signal board, Deck section
L5303 is located on the Small signal board; TU2 section

SET UP:
• Connect pin 5 of tuner 1301 to its pin 16.

3.2.5 AGC adjustment (Tuner 2 option)

TP	ADJ.	MODE	INPUT
Tuner 1301 Pin 17	R3341	E/E	2.2mV (67dBμV) on the aerial input White picture No audio carrier, no audio modulation
TAPE		MEAS. EQ	VALUE
		Oscilloscope Pattern Generator	500mV$_{pp}$ -1dB (PAL) 400mV$_{pp}$ -1dB (SEC) (Probe10:1)

Note: R3341 and Tuner 1301 are located on the Small signal board, TU2 section

3.2.6 Secam band 1 AFC adjustment (Tuner 2 option)

TP	ADJ.	MODE	INPUT
IC7410 Pin 61	R3322	E/E	33.95 MHz 100mV$_{pp}$ ±20mVpp on Pin 17 of tuner 1301
TAPE		MEAS. EQ	VALUE
		DC Voltmeter Sine wave Generator	2.5V ± 0.2V

Note. IC7410 is located on the Small signal board; Deck section.
R3322 is located on the Small signal board; TU2 section

3.3 Servo section

Head switching position adjustment

Purpose: Determine the correct head switching point during Playback.

Symptom of incorrect adjustment:
May cause head switching noise and/or vertical jitter in picture.

TP	ADJ.	MODE	INPUT
		SP PLAY	
TAPE		**MEAS. EQ**	**VALUE**
VHS Alignment tape 4822 397 30103			See description below

- Enter the Service mode (simultaneously press the STOP key on the remote control and the play key on the set for approximately 5 s)
- Activate the SERVICE CONTROL line, by pressing the ▶ key on the remote control, to display the second page of the Service mode.
- With the ▼ key, go down to the GAP ADJUSTMENT line.
- Insert the Alignment tape and play the Black and White pattern.
- Press key ▶ on the remote control.

This adjustment is automatic and the values will be stored in the EEPROM.

After completed adjustment, the set switches to STOP.

If the adjustment has failed, the set EJECTS the tape.

Possible causes: Incorrect Video Signal.
Defective Head Drum.
Defective µP.

3.4 Luminance and chrominance section

3.4.1 Sync Tip frequency adjustment

Purpose: To maintain the recording interchangeability by adjusting the Sync Tip Frequency and Deviation.

Symptom of incorrect adjustment:
Inadequate recording interchangeability.

TP	ADJ.	MODE	INPUT
Pin 2 connect. 1902	R3010	E/E	No signal
TAPE		**MEAS. EQ**	**VALUE**
		Frequency Counter	3,800MHz ± 20kHz

Note: R3010 and connector 1902 are located on the Small signal board; Signal processing section.

3-4-2 PAL record current adjustment

Purpose: Setting the optimum chrominance record level

Symptom of incorrect adjustment:

If the recording chroma level is too high, beats may occur in the picture.
If the level is too low, the color may be degraded.

Before starting the adjustment, connect pin 2 of IC 7051 to 5V through a 150Ω resistor and a 22μH coil.

TP	ADJ.	MODE	INPUT
Pin 2 connect. 1902	R3029	E/E	(SCART input) Red picture 75% saturation
TAPE		MEAS. EQ	VALUE
		Oscilloscope Pattern Generator	**A** = 85mV$_{pp}$ (-12.5dB relative to the luminance signal)

Note: R3029 and connector 1902 are located on the Small signal board; Signal processing section

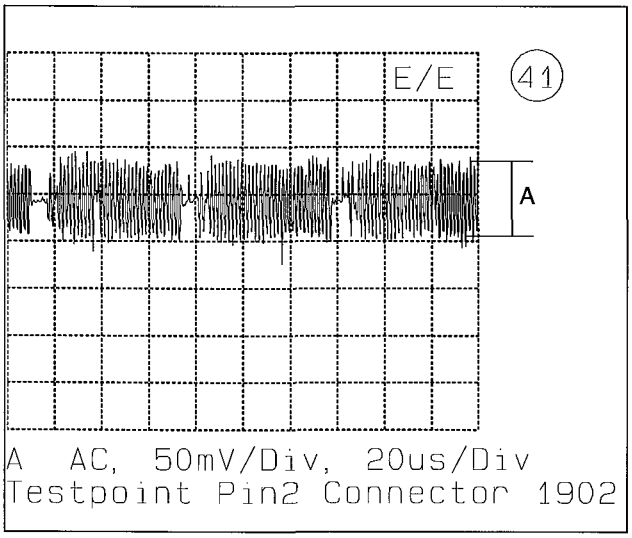

Fig E4

3-4-3 SECAM recording current adjustment

Before starting the adjustment, connect pin 2 of IC 7051 to 5V through a 150Ω resistor and a 22μH coil.

TP	ADJ.	MODE	INPUT
Pin 2 connect. 1902	R3027	E/E	(SCART input) SECAM red picture 75% saturation
TAPE		MEAS. EQ	VALUE
		Oscilloscope Pattern Generator	**A** = 55mV$_{pp}$ (-17dB relative to the luminance signal)

Note: R3027and connector 1902 are located on the Small signal board; Signal processing section.

3.5 Audio section

3.5.1 Bias current adjustment

Purpose: Set the optimum recording audio bias level.

Symptom of incorrect adjustment:
If audio bias level is too high, the frequency response deteriorates.
If the level is too low, sound distortion may occur.

TP	ADJ.	MODE	INPUT
- Pin 3 of 1901 - Pin 2 of IC7601 (difference measurement)	R3618	SP. RECORD.	
TAPE	**MEAS. EQ**		**VALUE**
Blank tape	Oscilloscope (10:1 probes) Sine wave generator		$44mV_{pp}$ (70kHz)

Note: Connector 1901, IC7601 and R3618 are located on the Small signal board; Audio section.

Bias Adjustment Control:

Inject a sine wave signal with a $50mV_{eff}$ amplitude on the Audio input of the SCART. Record 30s of 1kHz signal and 30s of 10kHz signal. Playback the recording and ensure that the amplitude difference between the two signals is within a ±3dB margin. If not, readjust the Bias value.

3.5.2 Audio playback level adjustment

Purpose: To obtain an homogeneous level between recording and play

Symptom of incorrect adjustment:
Level differences appear during play.

TP	ADJ.	MODE	INPUT
Audio Test Point C2659	R3606	SP. RECORD then PLAY	SCART input 1kHz signal $500mV_{RMS}$
TAPE	**MEAS. EQ**		**VALUE**
Blank tape	AC millivoltmeter		$500mV_{RMS}$

Note: R3606 and C2659 are located on the Small signal board; Audio section.

NOTES

3.6 TV and CRT section

3.6.1 Focus, screen (G2), cut off and drive adjustment

Purpose: To obtain maximum picture clarity

Symptom of incorrect adjustment:
The picture is out of focus and the screen color mix is incorrect

TP	ADJ.	MODE	INPUT
R, G, B signals on the tube	Focus control G2 (screen) control R3917 (B cut-off) R3918 (G cut-off) R3920 (R cut-off) R3921 (B gain) R3919 (G gain)	STOP	(SCART input) B & W pattern Black pattern Color bar Crosshatch pattern
TAPE	MEAS. EQ		VALUE
	Pattern Generator Oscilloscope (Probe 10:1)		See description below

Note: The focus and G2 (screen) controls are located on the Flyback (EHT) transformer.
R3917, R3918, R3919, R3920 and R3921 are located on the Tube PCB.

SET UP:
- Allow the set to warm up for about 15 mins, switched to the aerial input with the antenna disconnected.
- R3921, R3919 : center
- G2 control : Fully counterclockwise (minimum)
- Contrast control : nominal (84%, i.e the maximum value minus 4 blocks)
- Brightness control : center (50%)

ADJUSTMENT:
- Switch the set to SCART input.
- Apply a black pattern to the SCART
- With the oscilloscope, adjust the 3 cut-off potentiometers to obtain the following black level values (DC value) on the R, G, B inputs of the tube:
  14" tube: 115V
- Remove the probe.
- Adjust the G2 on the Flyback transformer until the predominant color screen is no longer emitting light.
- Readjust the two other screens with their respective controls (R3920 for Red, R3918 for Green and R3917 for Blue) until they no longer emit light.
- Apply a color bar signal and, if necessary, readjust the Contrast and Brightness controls for a normal operation of the set.
- Apply a gray scale. Adjust the gain potentiometers R3919 (Green) and R3921 (Blue) until the desired gray scale has been obtained.
- Apply a crosshatch pattern signal. Adjust the focus control on the Flyback transformer to obtain the sharpest picture position.

3.6.2 Horizontal position adjustment

Purpose: To obtain a correct horizontal position and a maximum screen picture size

Symptom of incorrect adjustment:
Horizontal position and screen picture size may not be correctly displayed.

TP	ADJ.	MODE	INPUT
	R3206	PLAY	
TAPE	MEAS. EQ		VALUE
VHS Alignment tape 4822 397 30103			See description below (see fig. E5)

Note: R3206 is located on the Small signal board; TV section

- Adjust R3206 so that the right and left sides of the picture are equal.

3.6.3 Vertical height adjustment

Purpose: To set the standard vertical size.

Symptom of incorrect adjustment:
The picture size on the vertical axis is abnormal.

TP	ADJ.	MODE	INPUT
	R3523 (Vert. amplitude) R3524 (Vert. shift)	PLAY	

TAPE	MEAS. EQ	VALUE
VHS Alignment tape 4822 397 30103		See description below (refer to fig. E5)

Note: R3523 and R3524 are located on the Large signal board

ADJUSTMENT:
- Adjust R3523 (Vertical Amplitude) so that a black bar becomes visible on top and bottom of the screen.
- Then readjust R3523 so that the large circle of the test pattern becomes uniformly round.
- Adjust R3524 (Vertical Shift) so that the screen is as shown in Fig. E5.

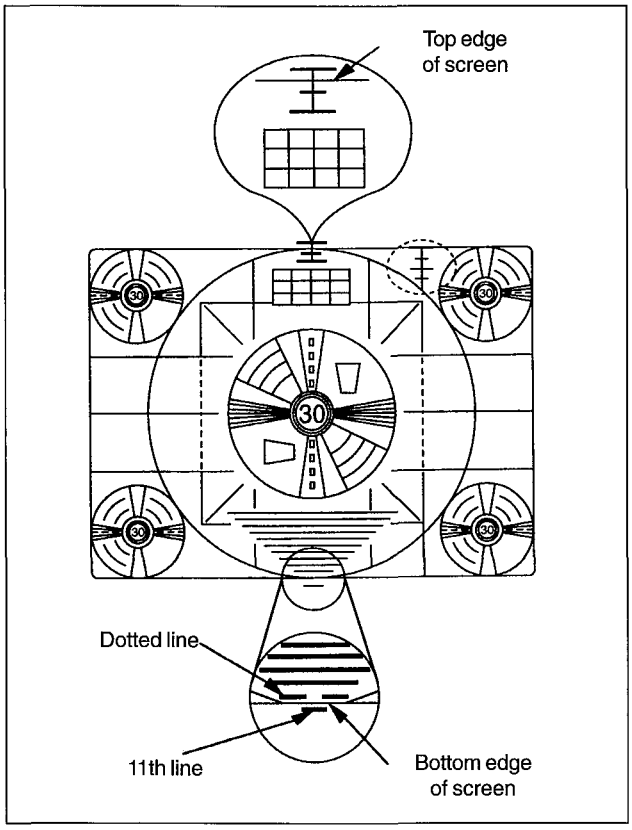

Fig. E5

NOTES

INTERCONNECTION WIRING DIAGRAM

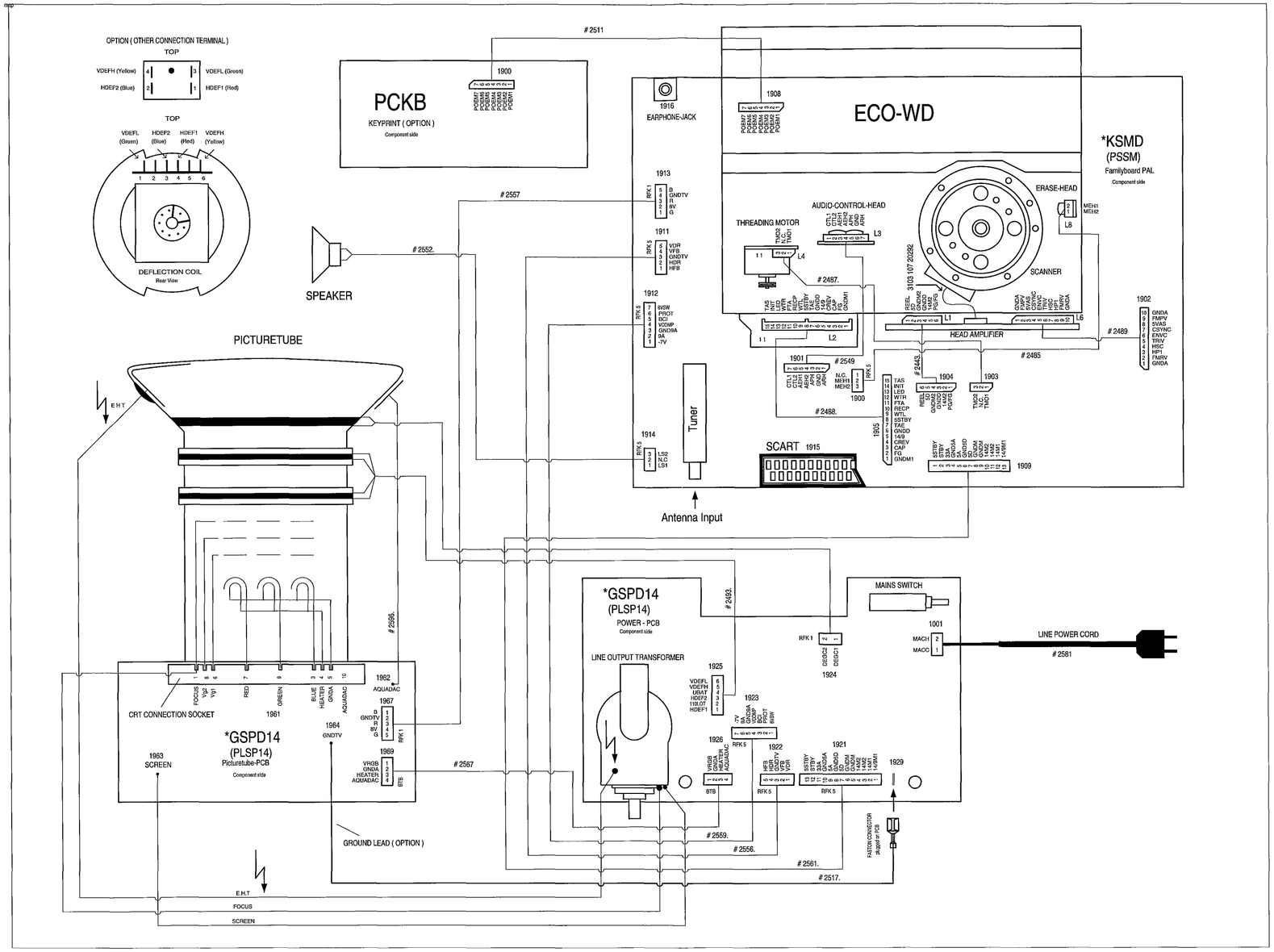

3-2

LARGE SIGNAL AND TV PART - BLOCK DIAGRAM

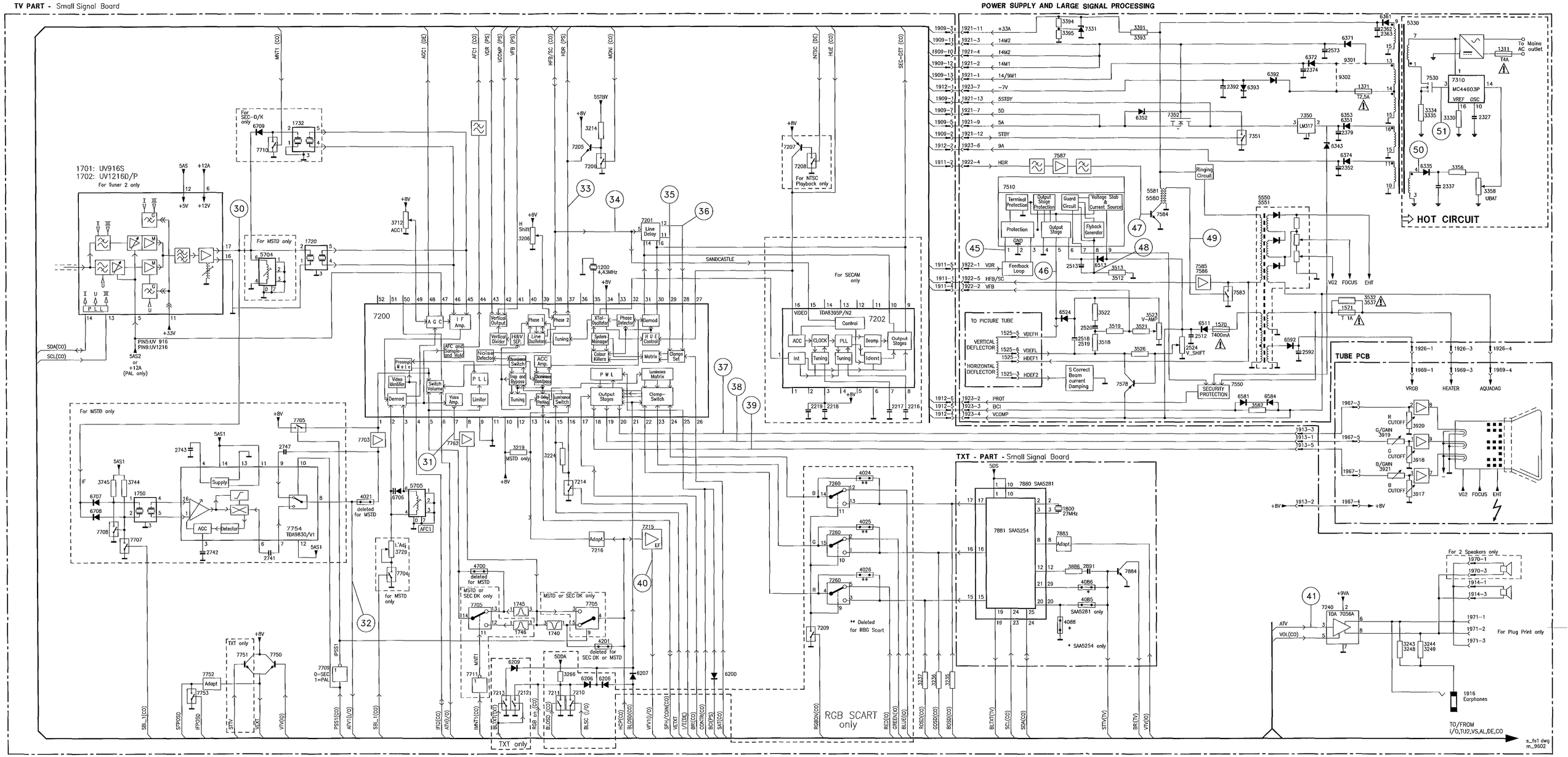

I/O; VIDEO PROCESSING; AUDIO PROCESSING AND HEAD AMPLIFIER - BLOCK DIAGRAM

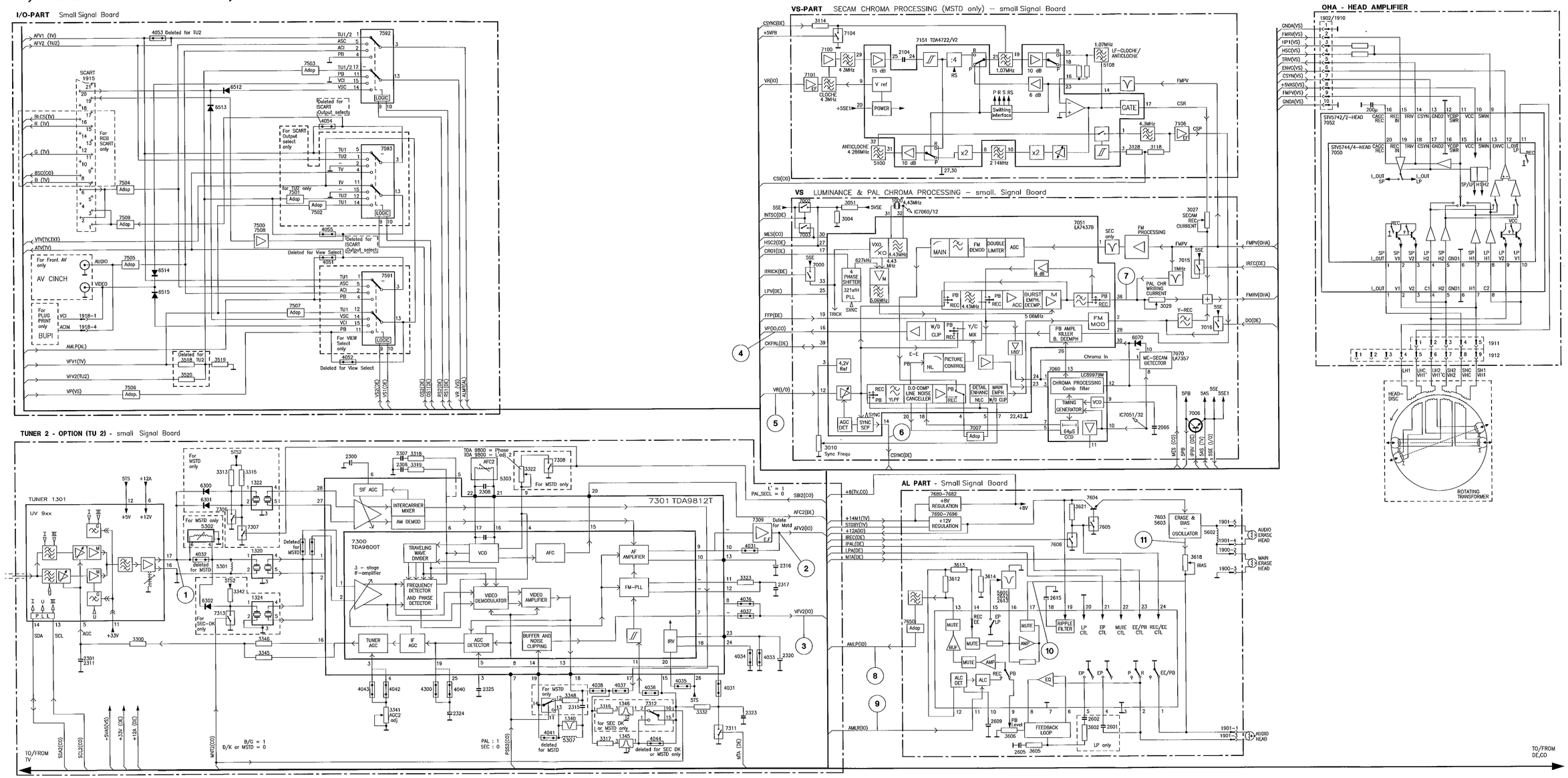

3-4

DECK ELECTRONIC AND CONTROL - BLOCK DIAGRAM

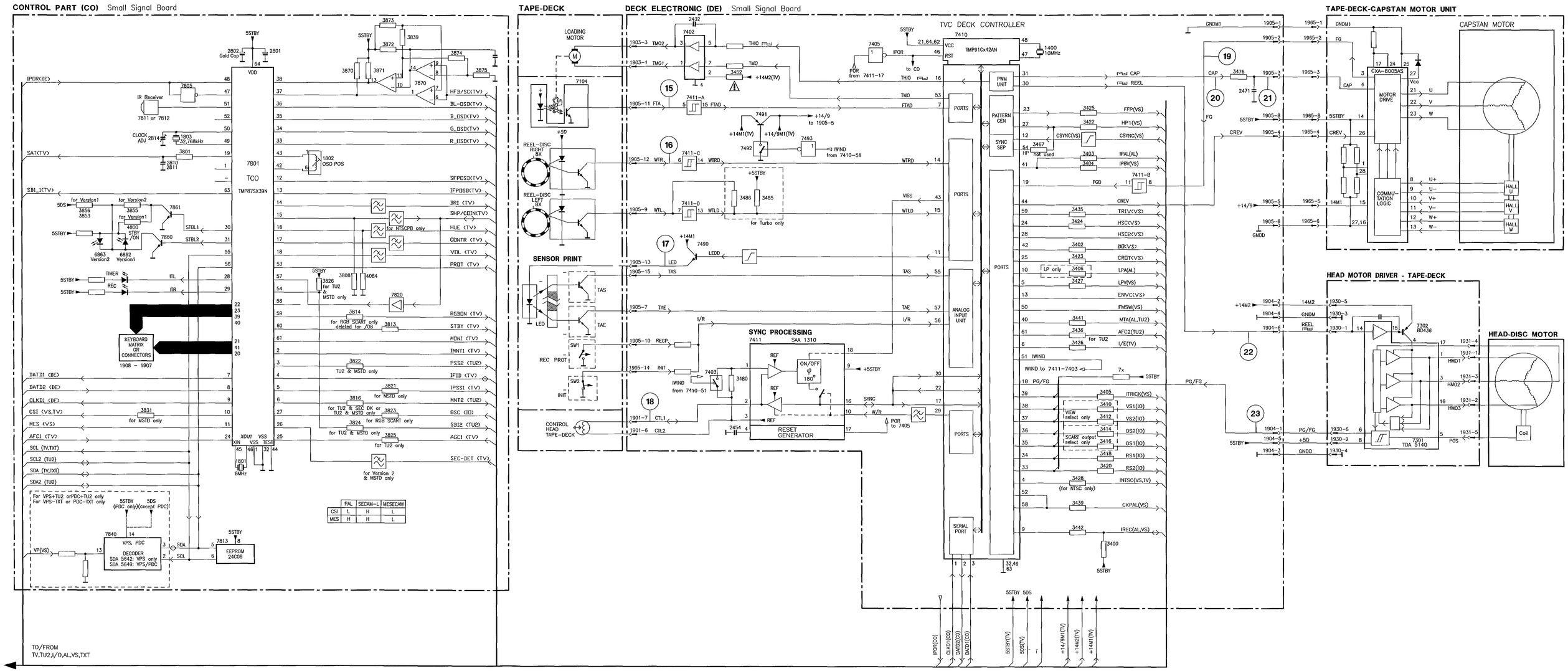

LARGE SIGNAL BOARD 14" (GSPD14) - SCHEMATIC DIAGRAM

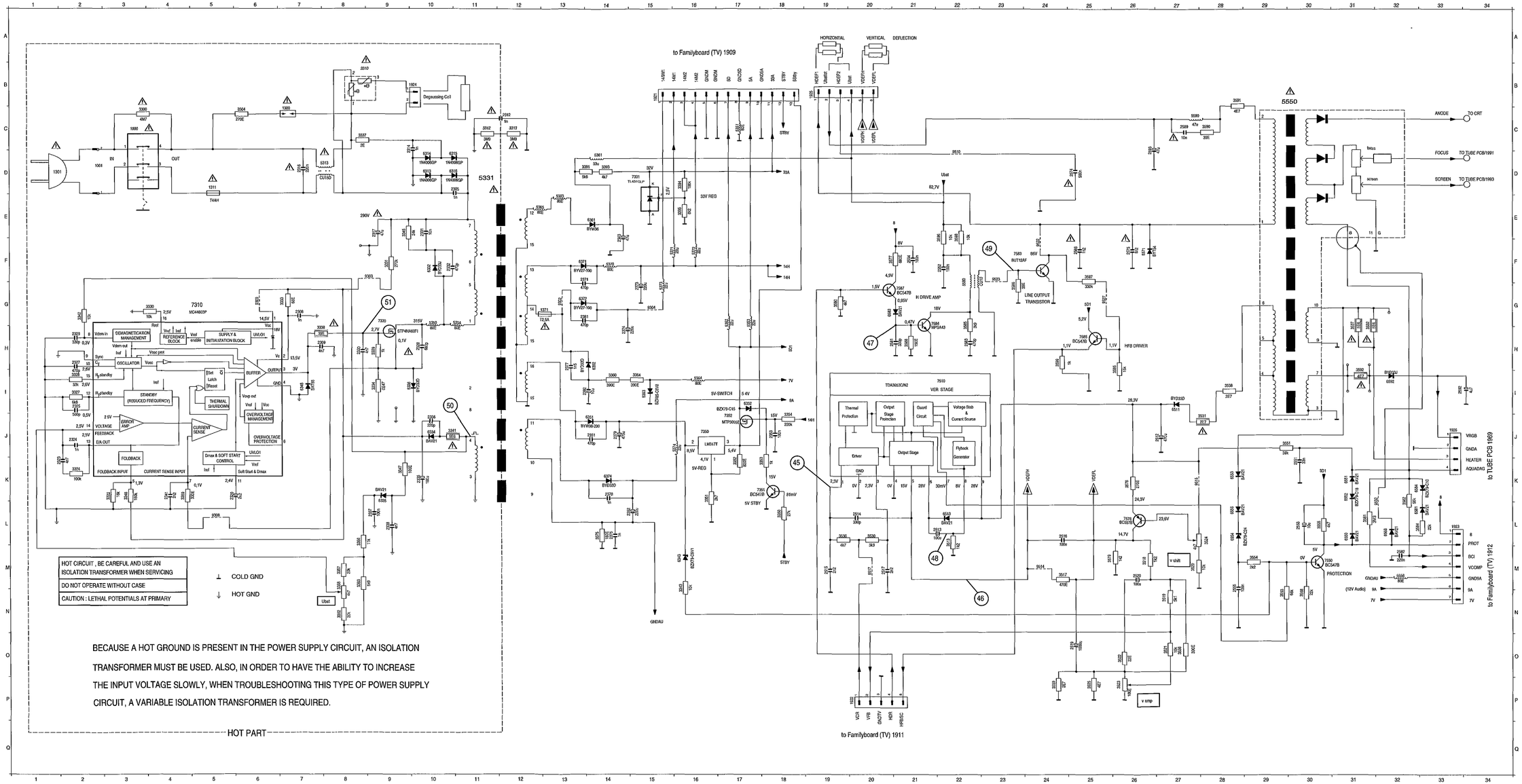

1000 C 3	3597 F25		
1001 D 2	3598 E22		
1300 C 7	3599 H24		
1311 D 5	5313 D 8		
1371 G13	5331 D11		
1921 B16	5350 G10		
1922 P20	5351 C17		
1923 L33	5352 G17		
1924 B 9	5353 G17		
1925 B19	5354 G11		
1926 J33	5361 D14		
2305 D11	5363 E13		
2308 G 7	5364 I16		
2309 H 7	5365 E12		
2312 C12	5370 F14		
2314 C10	5371 F16		
2316 B 7	5372 F16		
2317 E 9	5373 G15		
2320 K 5	5374 J16		
2323 K 2	5550 B29		
2324 J 2	5566 M32		
2325 I 2	5580 F22		
2327 H 2	5590 C27		
2328 H10	6313 D10		
2329 H 2	6314 D10		
2330 H 8	6315 D11		
2331 E10	6316 D11		
2332 F10	6332 F10		
2335 K10	6334 J10		
2336 J10	6335 L 9		
2337 L 9	6336 I10		
2339 L 9	6343 M16		
2341 K 4	6348 I 7		
2351 J14	6351 J14		
2352 L15	6352 I17		
2353 J18	6361 E14		
2363 E14	6371 F13		
2371 F13	6372 G13		
2373 G15	6374 K14		
2374 H14	6392 H14		
2375 L14	6393 I15		
2377 H13	6511 I27		
2378 K14	6513 L22		
2379 J14	6550 L31		
2381 G13	6551 K31		
2392 I14	6552 K31		
2512 J27	6553 K28		
2513 L22	6554 L28		
2514 L20	6556 L28		
2515 M19	6569 L32		
2516 L24	6571 F26		
2517 M20	6581 L32		
2519 O25	6583 G20		
2520 M26	6584 K32		
2551 K30	6592 I32		
2552 F22	7310 G 5		
2553 L30	7330 G 9		
2555 M29	7331 D15		
2574 O25	7350 J16		
2575 F26	7351 K18		
2581 H27	7352 J17		
2582 M32	7510 I22		
2583 H22	7550 M30		
2586 F25	7578 L26		
2589 C27	7583 F23		
2592 I33	7584 G21		
2593 C26	7585 I25		
2594 F21	7587 G21		
3300 C 3	9302 G13		
3304 C 6	9303 F 9		
3310 B 8	9304 G15		
3312 C11	9308 L 5		
3313 C12	9309 G 6		
3322 K 3	9510 D22		
3324 K 2	9514 M24		
3327 I 2	9515 K27		
3329 I 2	9517 M20		
3330 G 4	9522 F24		
3331 F 9	9523 F23		
3333 G 7	9527 G25		
3334 I 9	9532 K32		
3337 C 8			
3338 H 7			
3339 H 9			
3341 J10			
3342 G 2			
3343 M18			
3345 E 9			
3347 K 9			
3348 K 3			
3350 L18			
3351 K16			
3352 K17			
3353 K18			
3354 J18			
3356 L 8			
3357 M 8			
3358 M 8			
3359 K 4			
3360 I14			
3362 N 8			
3363 M 8			
3364 I15			
3375 L14			
3391 D14			
3393 D14			
3394 D16			
3395 E16			
3513 L22			
3517 M24			
3518 M26			
3519 N27			
3521 O27			
3522 O26			
3523 P26			
3524 L26			
3525 P25			
3529 M27			
3530 L20			
3531 J28			
3532 G31			
3536 L19			
3537 G31			
3538 I28			
3551 J29			
3553 N29			
3554 M29			
3555 L30			
3556 O27			
3558 N30			
3559 P24			
3577 F20			
3578 K26			
3579 M25			
3580 G19			
3581 L31			
3582 K32			
3584 L32			
3586 G22			
3586 G23			
3588 H21			
3590 C28			
3591 H28			
3592 I31			
3595 H26			
3596 E22			

3-6

CRT BOARD 14" (GSPD14) - SCHEMATIC DIAGRAM

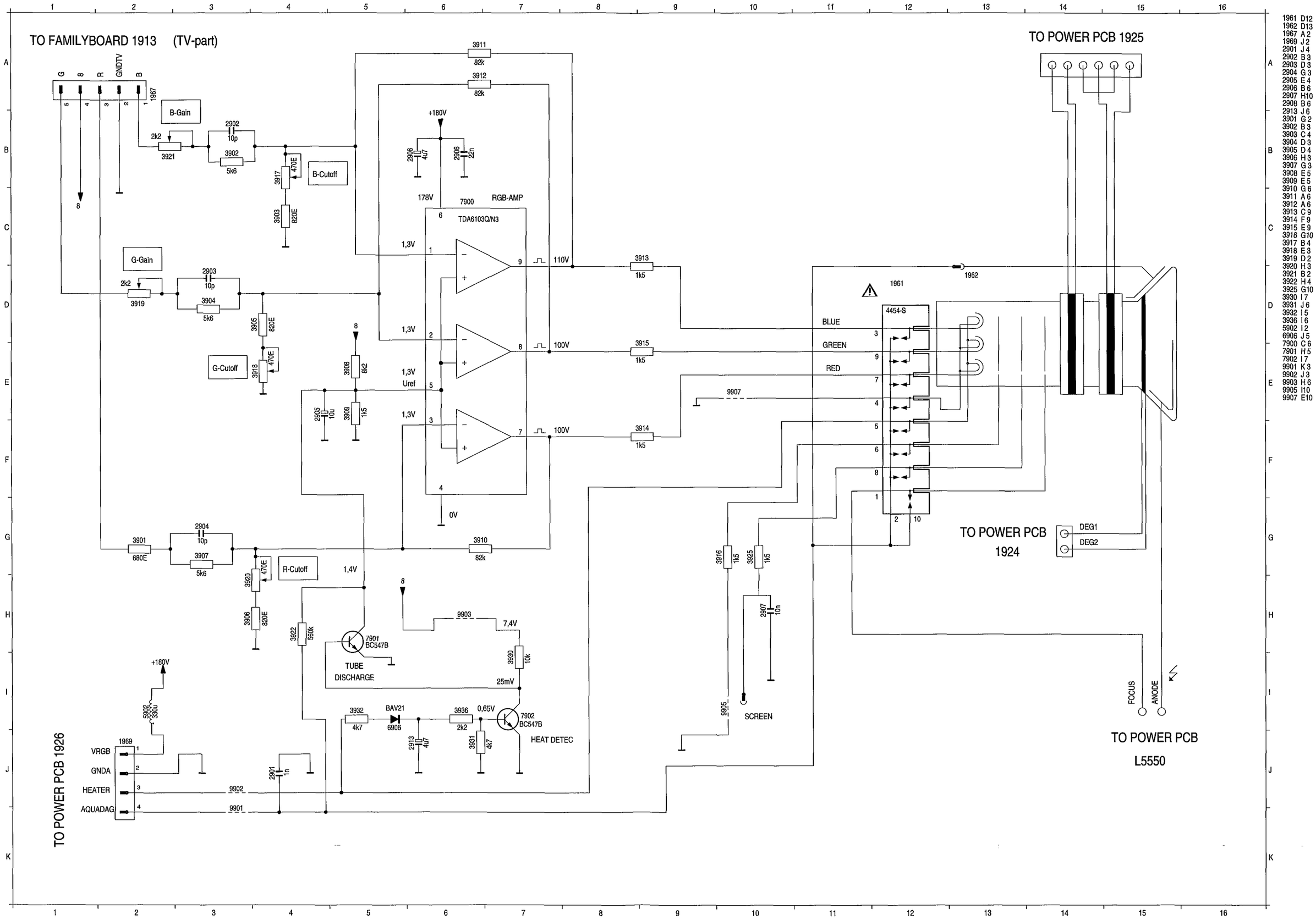

SMALL SIGNAL BOARD I (KSMDMx) - TUNER / TV / DEMODULATOR (TV) - SCHEMATIC DIAGRAM

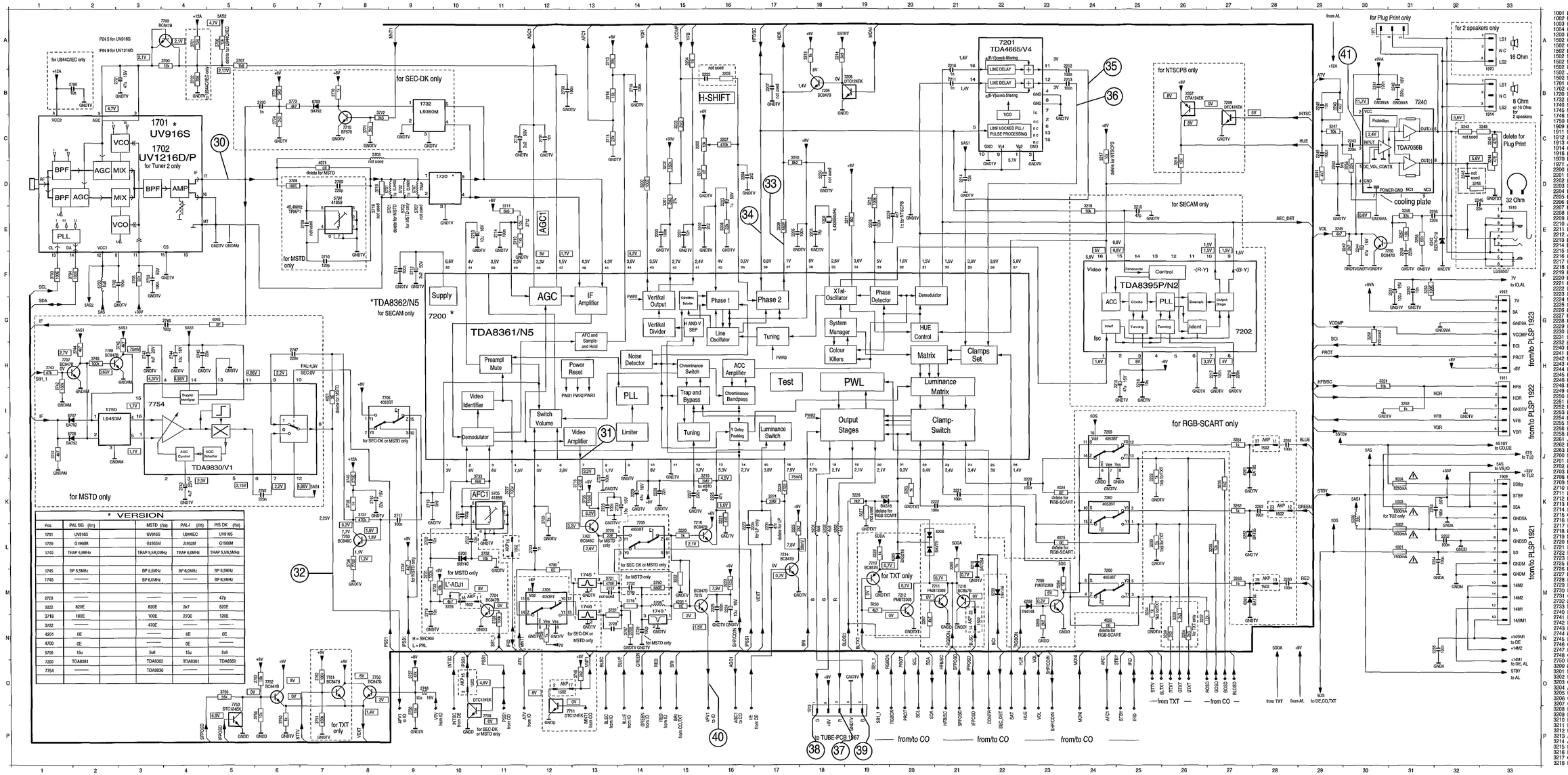

* VERSION

Pos.	PAL BG (/01)		MSTD (/5B)	PAL-I (/05)	PIS DK (/59)
1701	UV916S		UV916S	UB46EC	UV916S
1720	G1966M		G1950M	J1952M	G1966M
1740	TRAP 5,5MHz		TRAP 5,5/6,0MHz	TRAP 6,0MHz	TRAP 5,5/6,5MHz
1745	BP 5,5MHz		BP 5,0MHz	BP 6,0MHz	BP 5,5MHz
1746	——		BP 6,0MHz	——	BP 6,5MHz
2728	——		——	——	47p
3222	820E		820E	2k7	820E
3718	180E		100E	270E	120E
3722	——		470E	——	——
4201	0E		——	0E	0E
4700	0E		——	0E	——
5706	15u		5u6	15u	5u5
7200	TDA8361		TDA8362	TDA8361	TDA8362
7754	——		TDA9830	——	——

1001 L31 1002 L31 1003 K31 1004 K31 1200 E18 1502 O12 1502 D10 1502 L11 1502 N22 1502 M10 1502 K28 1502 L28 1502 M28 1701 C3 1702 C3 1720 D10 1732 B9 1740 M15 1745 M13 1746 M13 1750 I2 1909 K33 1911 H33 1912 F33 1913 O18 1914 C33 1916 D33 1970 B33 1971 A32 2200 E14 2201 E15 2202 E15 2203 D16 2204 D16 2205 E17 2206 E18 2207 B17 2208 E19 2209 E20 2210 A21 2211 B21 2212 A23 2213 B23 2214 D21 2215 E25 2216 H25 2217 H27 2218 H25 2219 H25 2220 K23 2221 K21 2222 K21 2223 L16 2224 M16 2225 M16 2226 K16 2227 K15 2228 K14 2229 K14 2230 D18 2231 L17 2232 B16 2240 D29 2241 B30 2242 B31 2243 C30 2244 E30 2245 D32 2246 D33 2248 B29 2249 C29 2250 F31 2251 F31 2252 L32 2253 K31 2254 L32 2255 N32 2256 E32 2258 F31 2261 J28 2262 K28 2263 M28 2700 B2 2701 B3 2702 F2 2703 F3 2708 E7 2709 D7 2710 F7 2711 F9 2712 F9 2713 E10 2714 E11 2715 C11 2716 B14 2717 K9 2718 K9 2719 M9 2720 L9 2721 K10 2722 L10 2723 L12 2725 K13 2726 K13 2727 M13 2728 M13 2729 N14 2730 B12 2731 C12 2732 M14 2733 K13 2740 K9 2741 K6 2742 K4 2743 H3 2744 H4 2745 H4 2746 G4 2747 H6 2748 O9 2750 B6 3200 D14 3201 D15 3202 D15 3203 C15 3204 A15 3205 B16 3206 C15 3207 C16 3208 E16 3209 E17 3210 D17 3211 E19 3212 D19 3213 A18 3214 A18 3215 D15 3216 D26 3217 C24 3218 E24 3219 K15 3220 L15 3221 K16 3222 M15 3223 M16 3224 K17 3225 L17 3226 K19 3227 K19 3228 K17 3229 L19 3230 M19 3232 J25 3233 L25 3234 M25 3235 K27 3236 L27 3237 N26 3238 N26 3239 N26 3240 B29 3241 D29 3242 E30 3243 C32 3244 C33 3245 E29 3246 D32 3247 C29 3248 C33 3249 C33 3250 F31 3251 H30 3252 I31 3253 K20 3254 N26 3255 D36 3256 E31 3257 E31 3258 E31 3259 G30 3261 J27 3262 K27 3263 M27 3264 M23 3265 M23 3266 L21 3267 N20 3700 A4 3701 A4 3702 B4 3703 F1 3704 F2 3705 F3 3705 A5 3707 A5 3708 D6 3709 N12 3710 E11 3711 E11 3712 E12 3713 A13 3714 B13 3715 C13 3716 C13 3718 M14 3719 K13 3720 L13 3722 M13 3725 K12 3727 K11 3728 N11 3729 M10 3730 M10 3731 M9 3732 L11 3733 K10 3734 L9 3735 K13 3736 L8 3737 K8 3738 K8 3740 K8 3741 J1 3742 H1 3743 H1 3744 I2 3745 H3 3746 H2 3747 N14 3748 O13 3750 P6 3751 P7 3752 O7 3753 O6 3754 P6 3755 O5 3756 P9 3757 O9 3760 M14 3770 B7 3771 C8 3772 C8 3773 B6 3774 G6 3775 B6 4021 I7 4024 K23 4025 L23 4026 N24 4056 G5 4071 D7 4201 M15 4700 L12 5200 K39 5201 L18 5202 L18 5203 L18 5270 F2 5701 D8 5702 D9 5703 D9 5704 D7 5705 K11 5706 M14 5707 D9 6200 M22 6206 L21 6207 C16 6208 M23 6209 L20 6210 L21 6241 E31 6261 J27 6262 L27 6263 M27 6705 L10 6707 I2 6708 J2 6709 B7 7200 G9 7201 A22 7202 G27 7205 B18 7206 B19 7207 B26 7208 B27 7209 M23 7210 M21 7211 M20 7212 M20 7213 L19 7214 L17 7215 M15 7216 L15 7240 B31 7250 F31 7260 I24 7260 K24 7280 M24 7700 A3 7703 L8 7704 M11 7705 M12 7706 I8 7705 K14 7707 H1 7708 H2 7709 P1 7710 C8 7711 P13 7750 O8 7751 O7 7752 O6 7753 O5 7754 I3 7762 L13

PCS 77409 GB

3-8

SMALL SIGNAL BOARD II (KSMDMx) - VIDEO PROCESSING (VS) - SCHEMATIC DIAGRAM

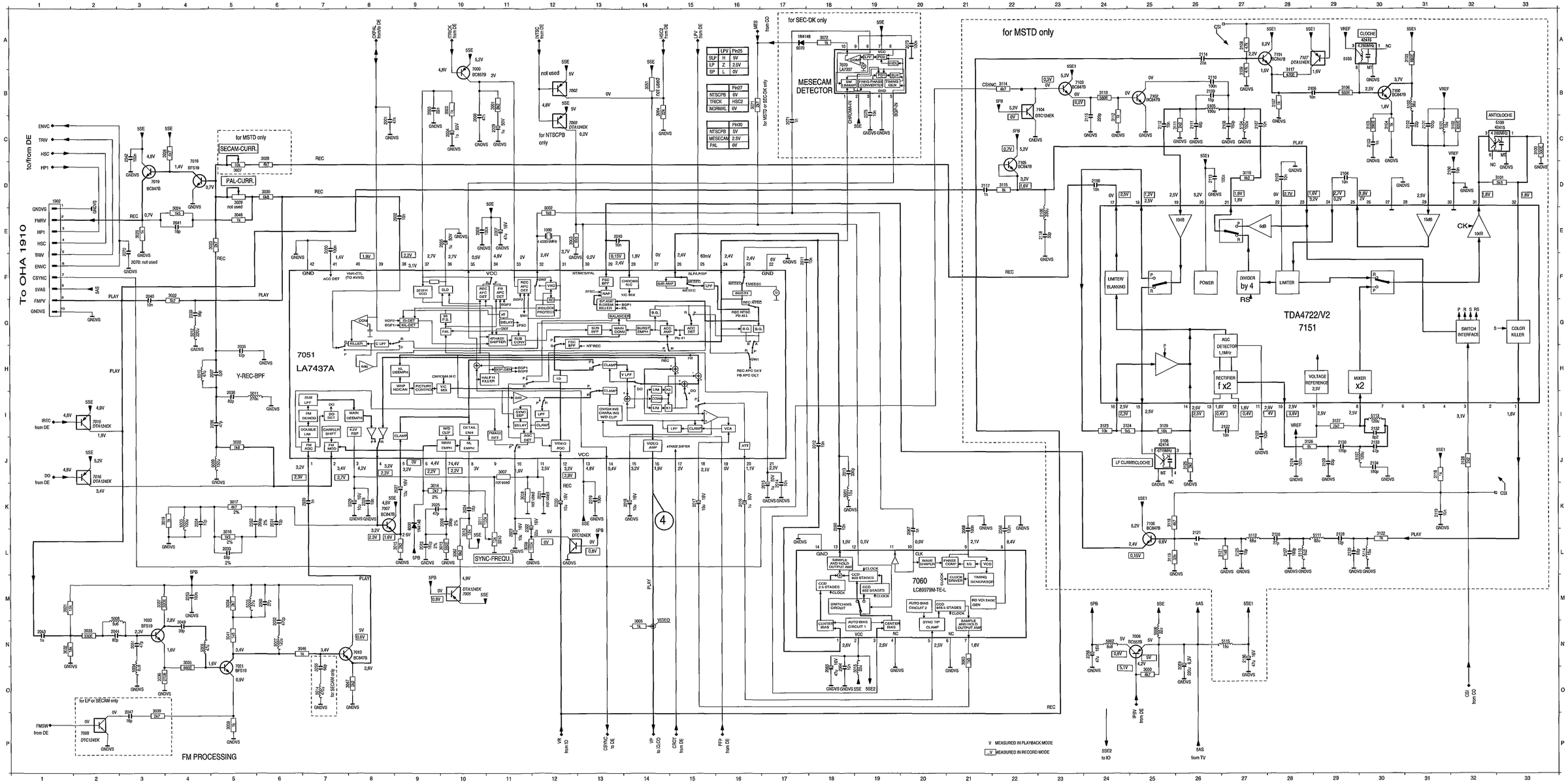

SMALL SIGNAL BOARD III (KSMDMx) - TELETEXT (TXT) - SCHEMATIC DIAGRAM

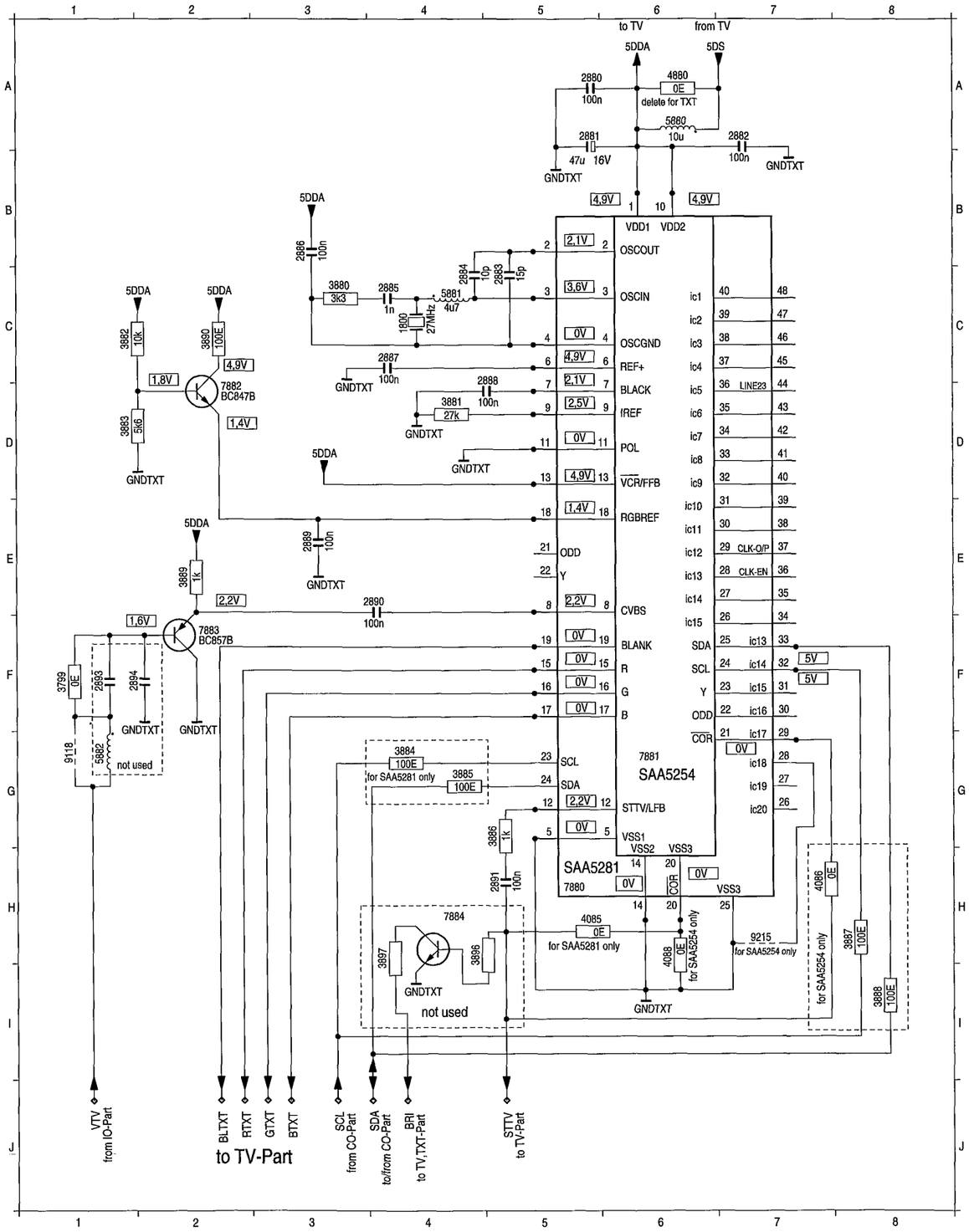

1800 C 4
2880 A 5
2881 A 5
2882 A 7
2883 C 5
2884 C 4
2885 C 4
2886 B 3
2887 C 4
2888 D 5
2889 E 3
2890 E 4
2891 H 5
2893 F 1
2894 F 2
3799 F 1
3880 C 3
3881 D 4
3882 C 1
3883 D 1
3884 G 4
3885 G 4
3886 G 5
3887 H 8
3888 I 8
3889 E 2
3890 C 2
3896 H 4
3897 H 4
4085 H 5
4086 H 7
4088 H 6
4880 A 6
5880 A 6
5881 C 4
5882 G 1
7880 H 5
7881 G 6
7882 D 2
7883 F 2
7884 H 4
9118 G 1
9215 H 7

3-10

SENSOR PRINT - KEYBOARD (PCKB) - SCHEMATIC DIAGRAM

SENSOR PRINT
NON TURBO VERSIONS

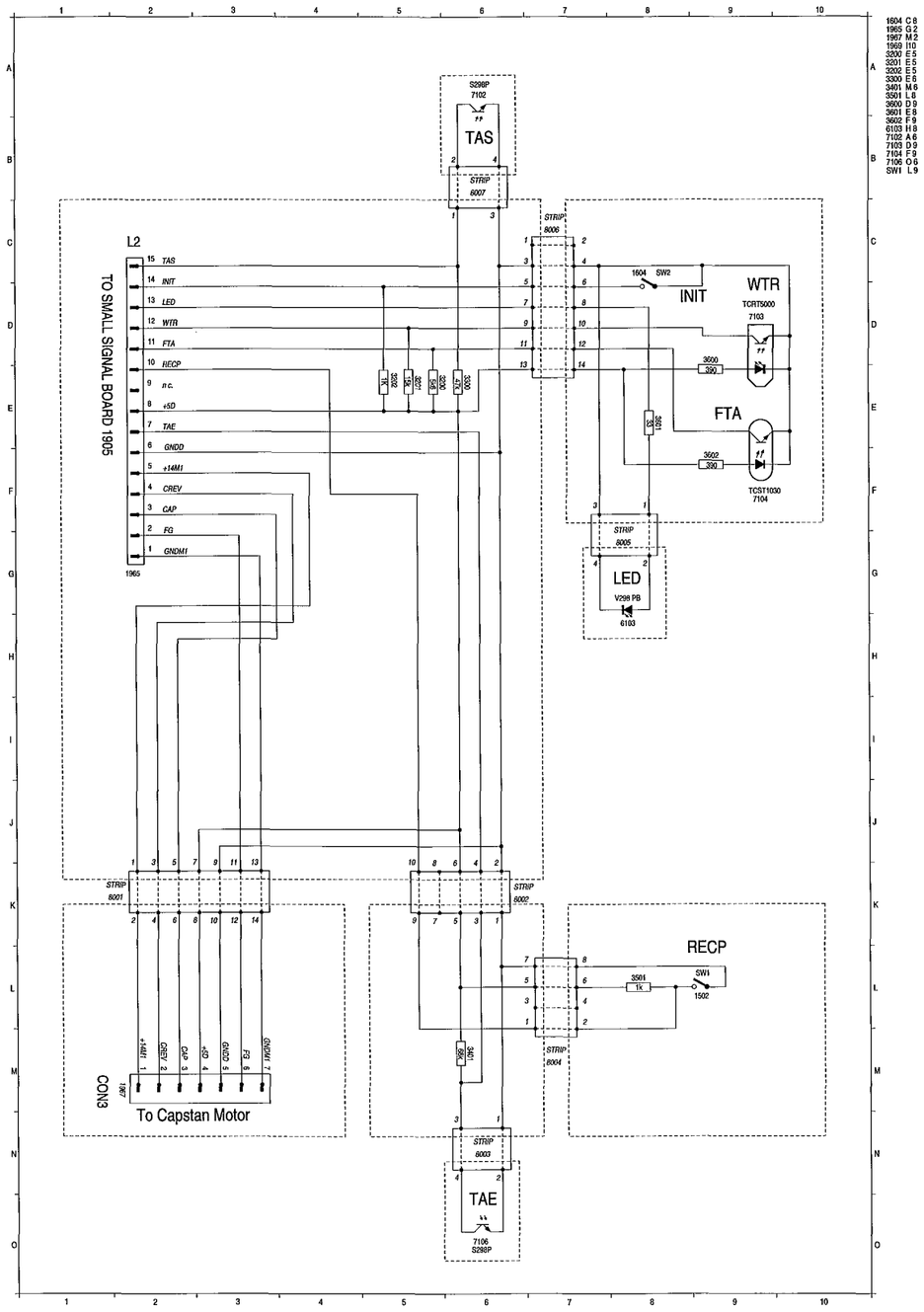

KEYBOARD

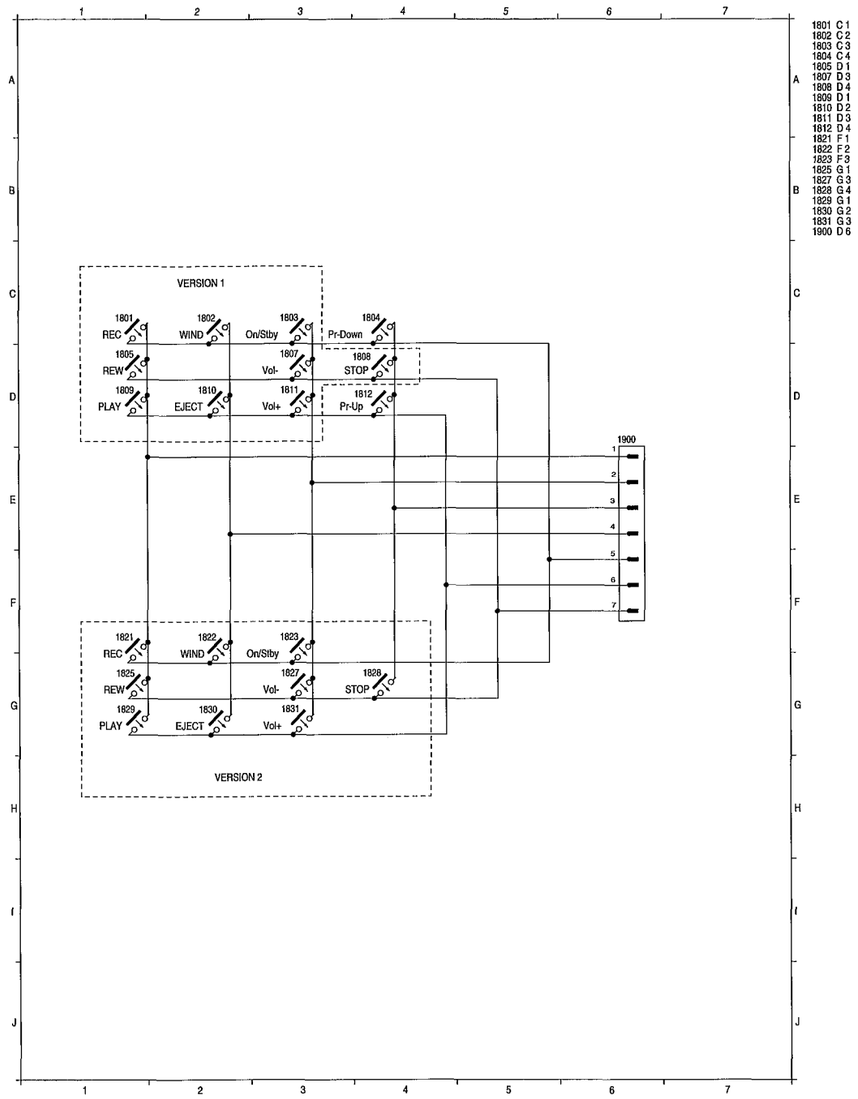

VERSION 2 = HITACHI SET

SMALL SIGNAL BOARD IV (KSMDMx) - DECK ELECTRONICS (DE) - SCHEMATIC DIAGRAM

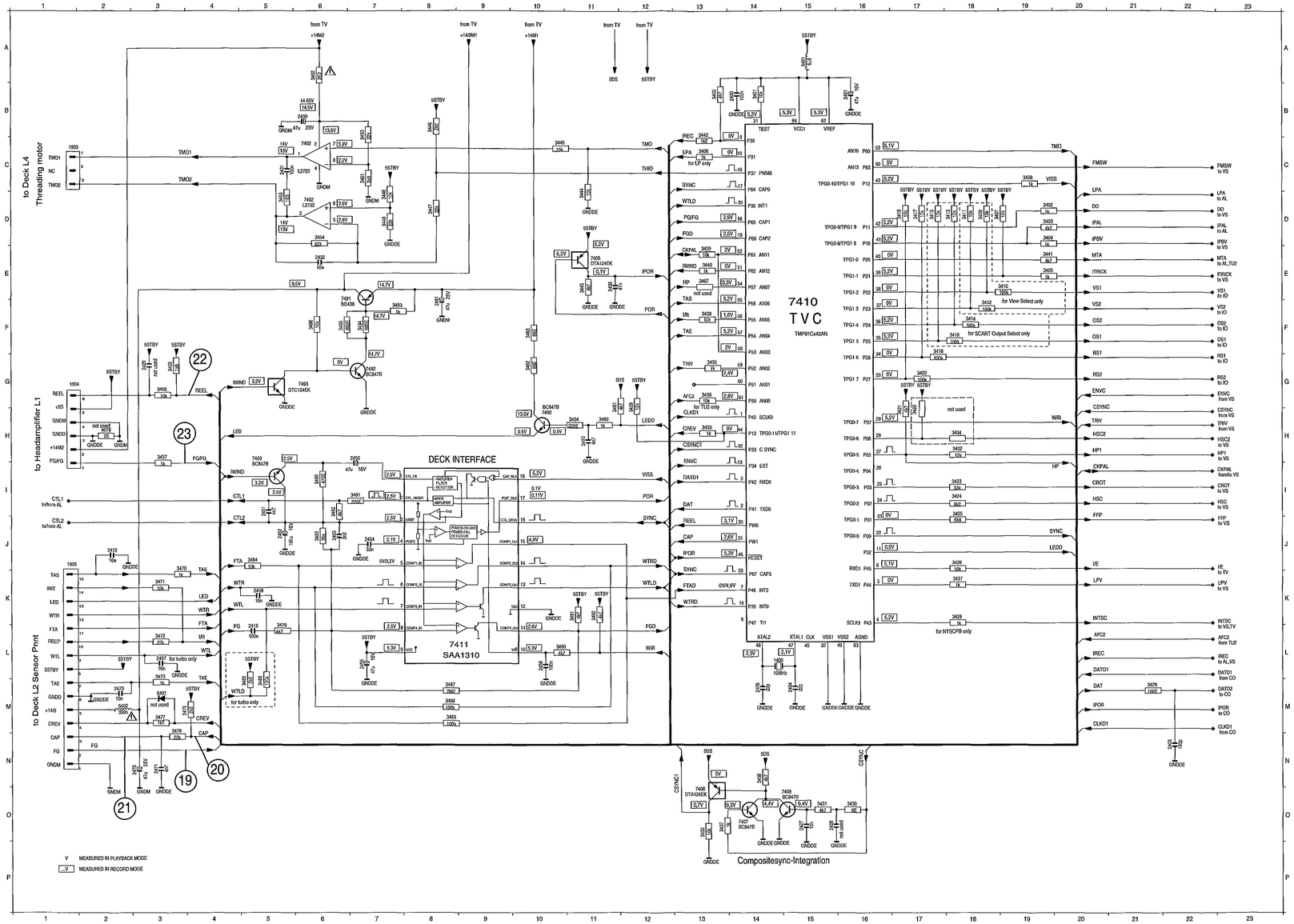

1400 L14 7493 G 6
1903 C 2
1904 G 1
1905 J 1
2400 B14
2401 B16
2403 N02
2404 M15
2405 M14
2415 L 5
2427 O15
2428 O15
2429 G 3
2430 B 6
2431 C 5
2432 E 6
2433 E11
2450 H 7
2451 I 5
2452 J 5
2453 J 6
2454 J 7
2455 L 7
2456 L10
2457 L 3
2458 K 5
2470 N 3
2471 N 3
2472 J 2
2473 M 2
2480 H11
2491 F 8
3400 B13
3401 B14
3402 D19
3403 D19
3404 D19
3405 E19
3406 C13
3407 D18
3408 C19
3409 D18
3410 E19
3411 D18
3412 F18
3413 D17
3414 F18
3415 D17
3416 F18
3417 D17
3418 G17
3419 D17
3420 G17
3421 H17
3422 H18
3423 I18
3424 I18
3425 J18
3426 J18
3427 K18
3428 K18
3429 M21
3430 O16
3431 O15
3432 O13
3433 H13
3434 H16
3435 G13
3436 G13
3437 O13
3438 F13
3439 E13
3440 E13
3441 E19
3442 C13
3443 E11
3444 D11
3445 C10
3446 B 8
3447 D 6
3448 D 7
3449 D 7
3450 B 7
3451 C 7
3452 A 6
3453 D 5
3454 D 6
3455 G 3
3456 G 3
3457 H 3
3458 N14
3459 G12
3460 H11
3461 G11
3462 G10
3463 F10
3464 H11
3465 H17
3467 E13
3470 K 3
3471 K 3
3472 L 3
3473 M 3
3475 M 3
3476 N 3
3477 M 3
3479 L 5
3480 I 6
3481 I 7
3482 I 6
3483 J 6
3484 J 5
3485 M 4
3486 M 5
3487 M 8
3488 M 8
3489 M 8
3490 L10
3491 K11
3492 K11
3493 F 7
3494 F 7
3495 F 6
3496 F 6
4078 H 2
5401 A15
5402 M 2
6401 M 3
7402 C 6
7403 D 6
7403 H 5
7405 E11
7406 N13
7407 O14
7408 O15
7410 F15
7411 L 8
7490 H10
7491 F 6
7492 G 7

3-12

SMALL SIGNAL BOARD V (KSMDMx) - CONTROL (CO) - SCHEMATIC DIAGRAM

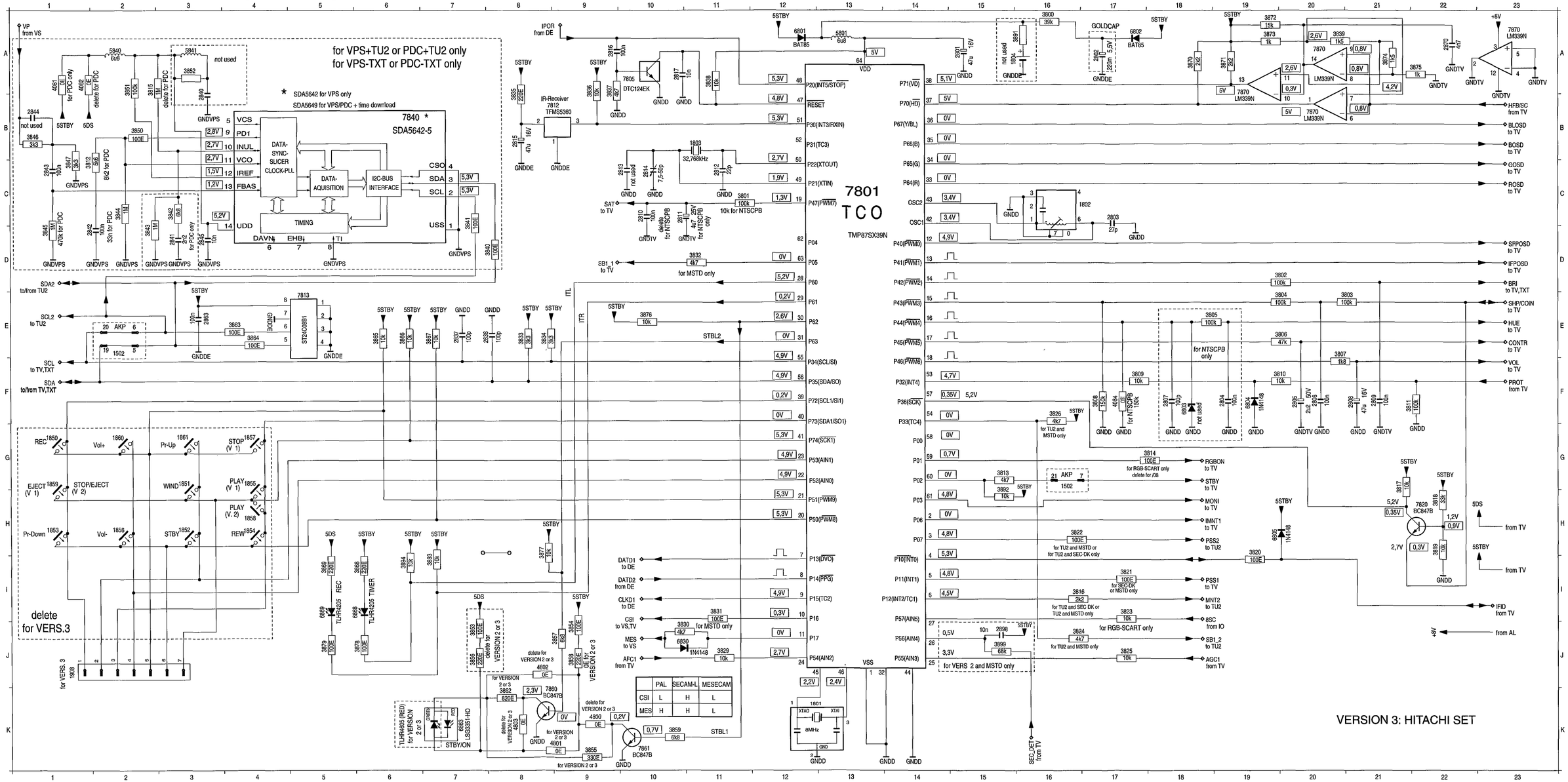

PAL	SECAM-L	MESECAM
CSI	L	H	L
MES	H	H	L

1502 E 2
1502 G16
1801 K12
1802 C17
1803 B11
1804 A16
1850 G 1
1851 G 3
1852 H 3
1853 H 1
1854 H 4
1855 G 4
1856 H 2
1857 G 4
1858 H 4
1859 G 1
1860 G 2
1861 G 3
1908 J 1
2801 A15
2802 A17
2803 C17
2804 F19
2805 F20
2806 F20
2807 F18
2808 F21
2809 F21
2810 C10
2811 C10
2812 C11
2813 C10
2814 C10
2815 B 8
2816 A 9
2817 A10
2837 E 7
2838 E 8
2840 B 3
2841 D 3
2842 D 2
2843 C 1
2844 B 1
2845 D 3
2863 E 3
2870 A22
2898 J15
3800 A16
3801 C11
3802 D20
3803 E21
3804 E20
3805 E18
3806 E20
3807 E20
3808 F17
3809 F17
3810 F20
3811 F21
3812 C 1
3813 G15
3814 G18
3815 A 2
3816 I16
3817 G21
3818 H22
3819 H22
3820 H19
3821 I17
3822 H16
3823 I17
3824 J16
3825 J17
3826 F16
3829 J11
3830 J10
3831 I11
3832 D11
3833 E 8
3834 E 8
3835 B 8
3836 A 9
3837 A 9
3838 A11
3839 A20
3840 D 8
3841 C 7
3842 C 3
3843 D 2
3844 C 2
3845 D 1
3846 B 1
3847 C 1
3850 B 2
3851 A 2
3852 A 3
3853 J 7
3854 J 9
3855 K 9
3856 J 7
3857 J 9
3858 J 9
3859 K10
3862 K 8
3863 E 4
3864 E 4
3865 E 6
3866 E 6
3867 E 7
3868 I 6
3869 I 5
3870 A18
3871 A19
3872 A19
3873 A19
3874 A21
3875 A22
3876 E10
3877 H 8
3878 J 6
3879 J 5
3891 A16
3892 H15
3893 I 7
3894 I 6
3899 J15
4081 A 1
4082 A 1
4084 F17
4800 K 9
4801 K 9
4802 J 8
4803 K 8
5801 A13
5840 A 2
5841 A 3
6801 A12
6802 A17
6803 F18
6804 F19
6805 H19
6830 J10
6863 K 7
6868 I 6
6869 I 5
7801 C13
7805 A10
7812 B 8
7813 E 5
7820 H22
7840 B 6
7860 K 9
7861 K10
7870 A23
7870 B20
7870 A20
7870 B19

SMALL SIGNAL BOARD VI (KSMDMx) - AUDIO PROCESSING (AL) - SCHEMATIC DIAGRAM

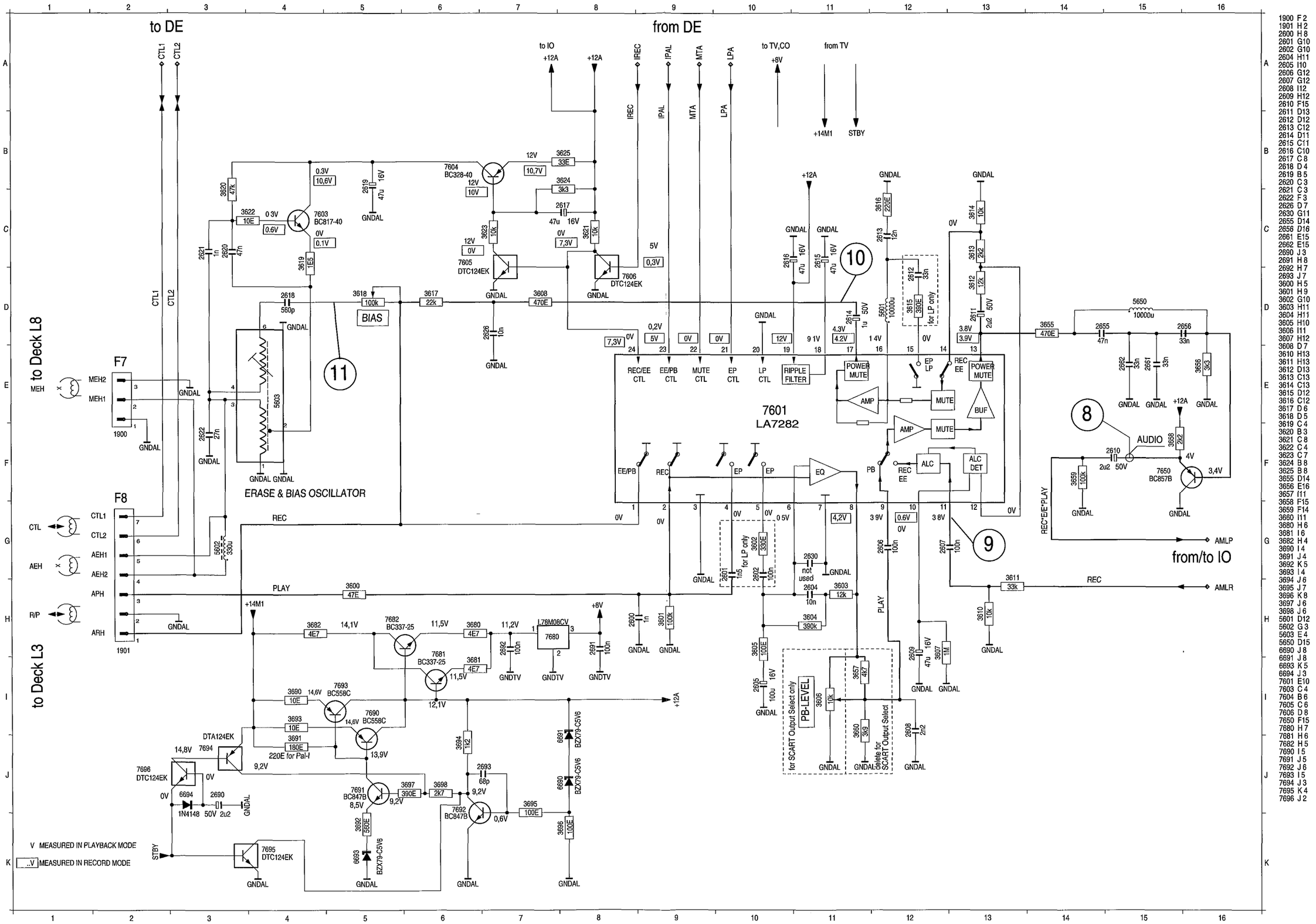

3-14

SMALL SIGNAL BOARD VII (KSMDMx) - IN/OUT SWITCHING (I/O) - SCHEMATIC DIAGRAM

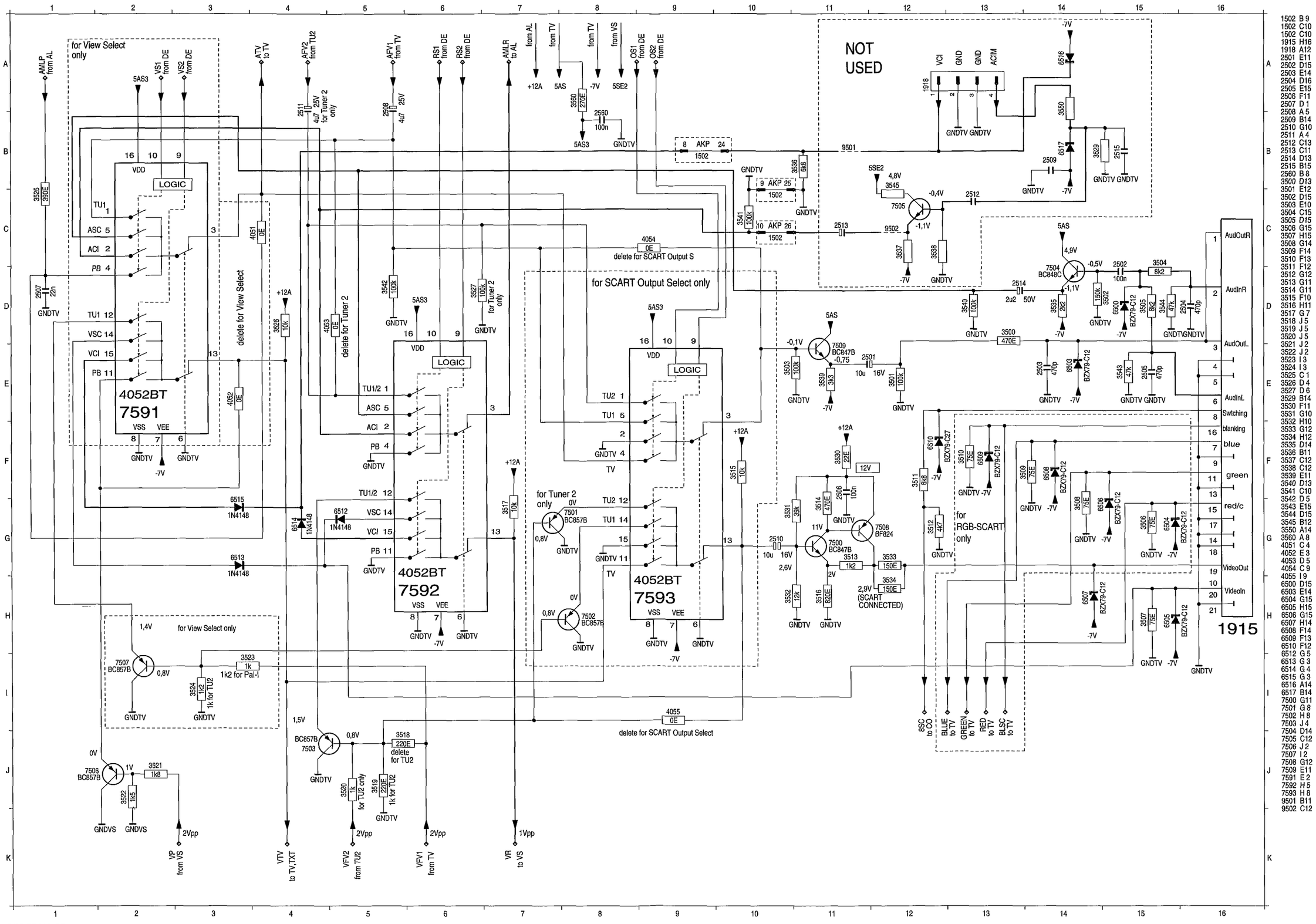

SMALL SIGNAL BOARD VIII (KSMDMx) - TUNER 2 (TU2) - SCHEMATIC DIAGRAM

* VERSION					
Pos	PAL-BG	PAL-I		PAL-BG/SEC-L	PAL-BG/SEC-DK
	/01	/05		/39	/59
1301	UV916S/PH	U944C		UV916S/PH	UV916S/PH
1320	G1966M	J1952M		G1965M	G1966M
1340	TRAP 5,5MHz	TRAP 6,0MHz		TRAP 5,5/6,0MHz	TRAP 5,5/6,5MHz
1345	BP 5,5MHz	BP 6,0MHz		BP 5,5MHz	BP 5,5MHz
1346	——	——		BP 6,0MHz	BP 6,5MHz
2313	——	——		——	47p
3316	——	——		470E	——
3322	4k7	4k7		22k	4k7
3339	270E	270E		180E	120E
4039	——	——		0E	——
4044	0E	0E		——	——
5307	15uH	15uH		5u6	5u6
7300	TDA9800T	TDA9800T		——	TDA9800T
7301	——	——		TDA9812T	——
for TDA 9800 only:	2306, 3319, 3345, 4033, 4035, 4036, 4038, 4041, 4043, 4301, 4302, 4304, 4305, 4307				
for TDA 9812 only:	2300, 2307, 2317, 2320, 2325, 3318, 3323, 3332, 3346, 4031, 4034, 4037, 4040, 4042, 4303, 4306, 9000				

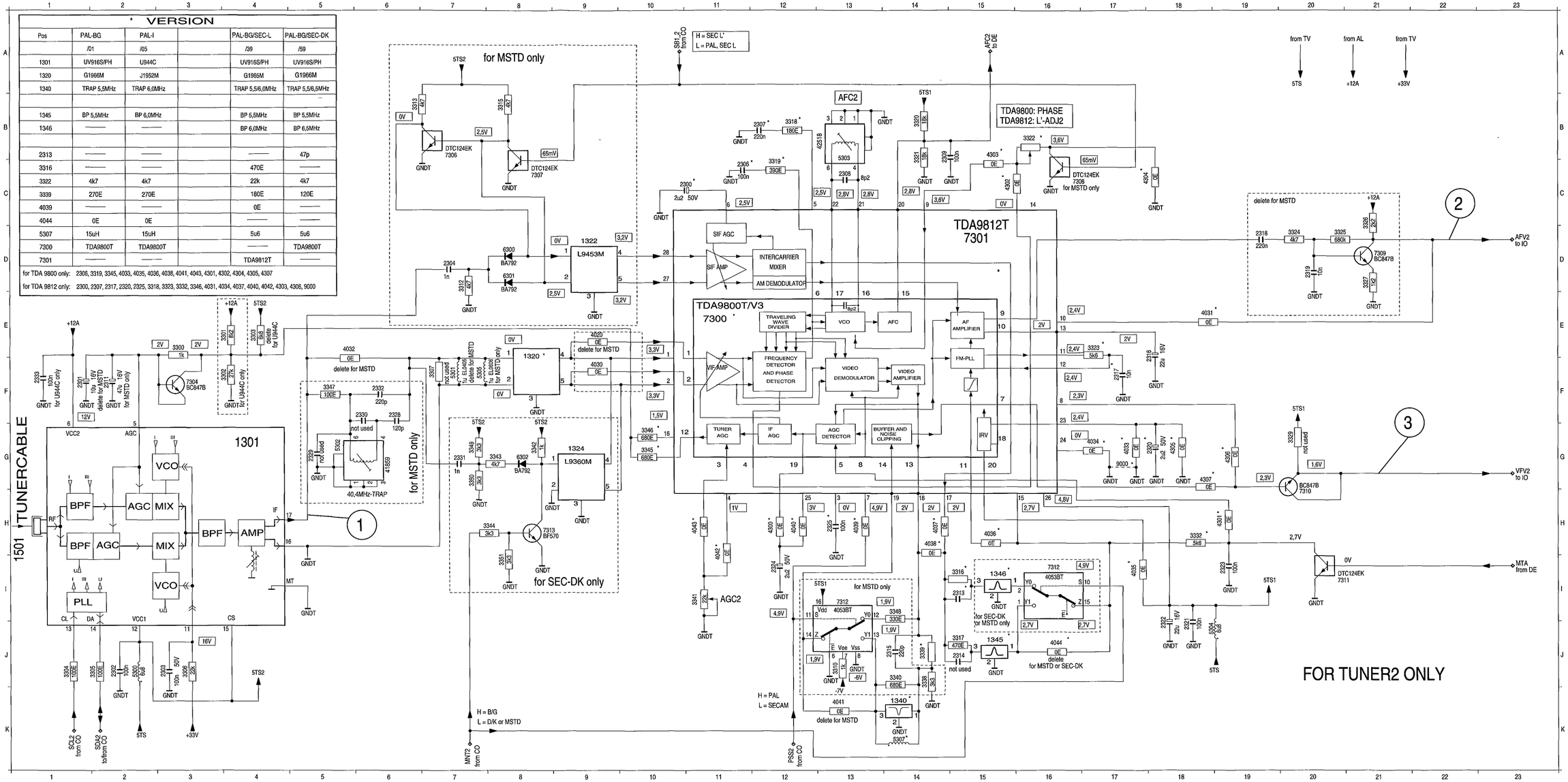

1301 G 4
1320 F 8
1322 D 9
1324 G 9
1340 K14
1345 J15
1346 I15
1501 I 1
2300 C11
2301 F 1
2302 J 2
2303 J 3
2304 D 7
2306 C11
2307 B12
2308 C13
2309 B14
2311 F 2
2313 I15
2314 J15
2315 J14
2316 E18
2317 F17
2318 D19
2319 D20
2320 G18
2321 J18
2322 J18
2323 I19
2324 I12
2325 H13
2328 F 6
2329 G 5
2330 F 6
2331 G 7
2332 F 6
2333 F 1
3300 E 3
3301 E 4
3302 F 4
3303 E 4
3304 J 1
3305 J 2
3306 J 3
3307 F 7
3310 J13
3312 D 7
3313 B 6
3315 B 8
3316 I15
3317 J15
3318 B12
3319 C12
3320 B14
3321 B14
3323 B16
3323 E17
3324 D20
3325 D20
3326 C21
3327 D21
3329 G20
3332 H18
3338 J14
3339 J14
3340 J14
3341 I11
3342 G 8
3343 G 8
3344 H 8
3345 G10
3346 G10
3347 F 5
3348 I14
3349 G 7
3350 G 7
3351 I 8
4020 E 9
4030 F 9
4031 E18
4032 E 5
4033 G17
4034 G17
4035 I17
4036 H15
4037 H14
4038 H14
4039 H13
4040 H12
4041 K13
4042 H11
4043 H11
4044 J16
4300 H12
4301 H19
4302 C15
4303 B15
4304 C18
4305 G18
4306 G19
4307 G18
5301 J 2
5302 F 7
5303 G 5
5303 C13
5304 J18
5305 F 7
5307 K14
6300 D 8
6301 D 8
6302 G 8
7300 E11
7301 D15
7304 F 3
7306 B 7
7307 C 8
7308 C16
7309 D21
7310 G20
7311 I20
7312 I13
7312 I16
7313 H 8
9000 G17

PCS 77417 GB

3-16

HEAD AMPLIFIER (OHA) - SCHEMATIC DIAGRAM

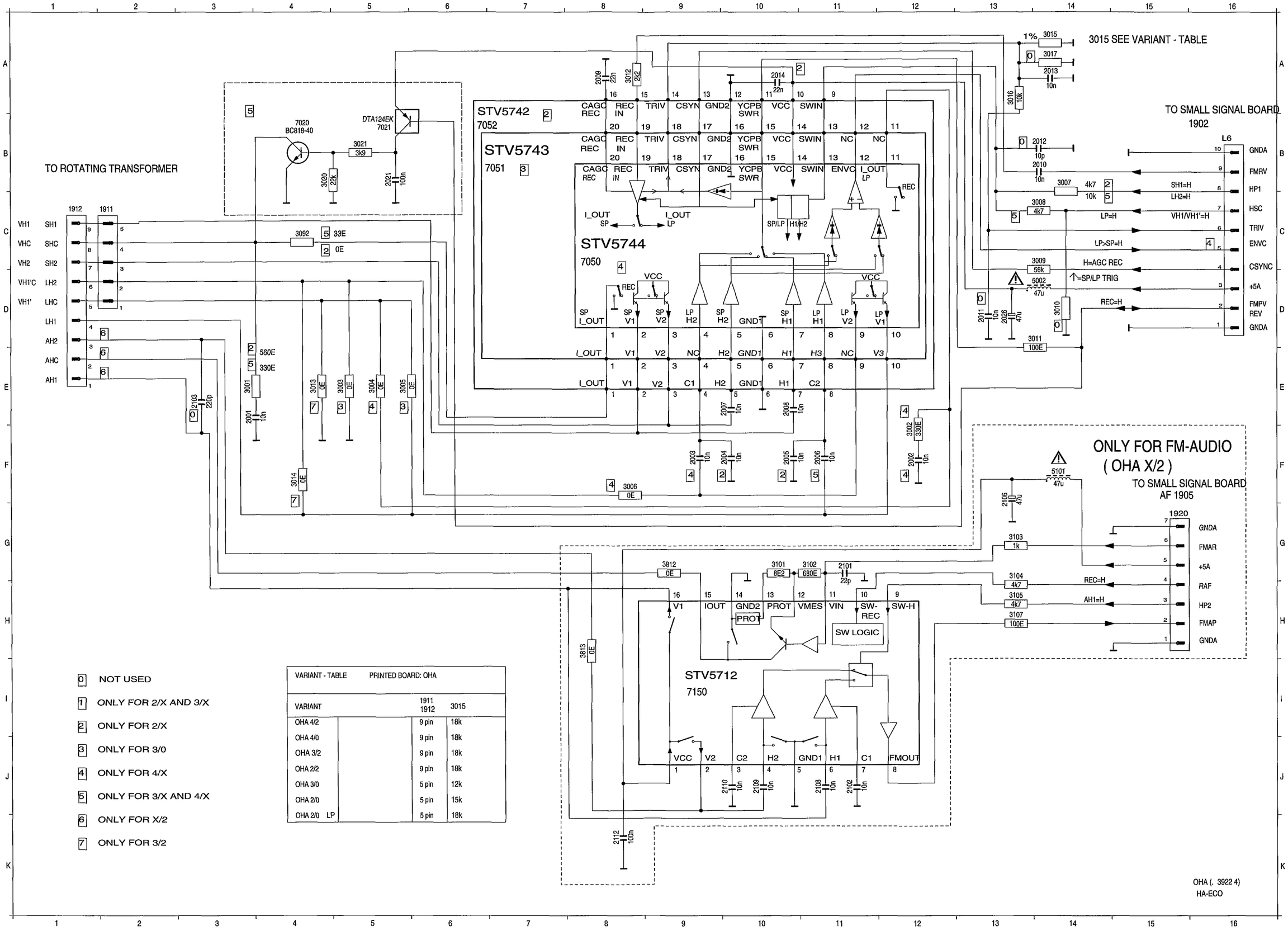

0 NOT USED

1 ONLY FOR 2/X AND 3/X

2 ONLY FOR 2/X

3 ONLY FOR 3/0

4 ONLY FOR 4/X

5 ONLY FOR 3/X AND 4/X

6 ONLY FOR X/2

7 ONLY FOR 3/2

VARIANT - TABLE PRINTED BOARD: OHA

VARIANT		1911 1912	3015
OHA 4/2		9 pin	18k
OHA 4/0		9 pin	18k
OHA 3/2		9 pin	18k
OHA 2/2		9 pin	18k
OHA 3/0		5 pin	12k
OHA 2/0		5 pin	15k
OHA 2/0	LP	5 pin	18k

1910 B16
1911 C 2
1912 C 1
1920 G15
2001 E 3
2002 F12
2003 F 9
2004 F10
2005 F10
2006 F11
2007 E10
2008 E10
2009 A 8
2010 B14
2011 D13
2012 B14
2013 A14
2014 A10
2021 B 5
2026 D13
2101 G11
2102 J11
2103 E 3
2106 F13
2108 J11
2109 J10
2110 J10
2112 K 8
3001 E 3
3002 F12
3003 E 5
3004 E 5
3005 E 5
3006 F 8
3007 B14
3008 C14
3009 C14
3010 D14
3011 D14
3012 A 8
3013 E 4
3014 F 4
3015 A14
3016 A13
3017 A14
3020 B 4
3021 B 5
3092 C 4
3101 G10
3102 G11
3103 G13
3104 G13
3105 H13
3107 H13
3812 G 9
3813 H 8
5002 D14
5101 F14
7020 B 4
7021 B 5
7050 C 8
7051 B 6
7052 B 6
7150 I 9

LARGE SIGNAL BOARD (GSPDxx)

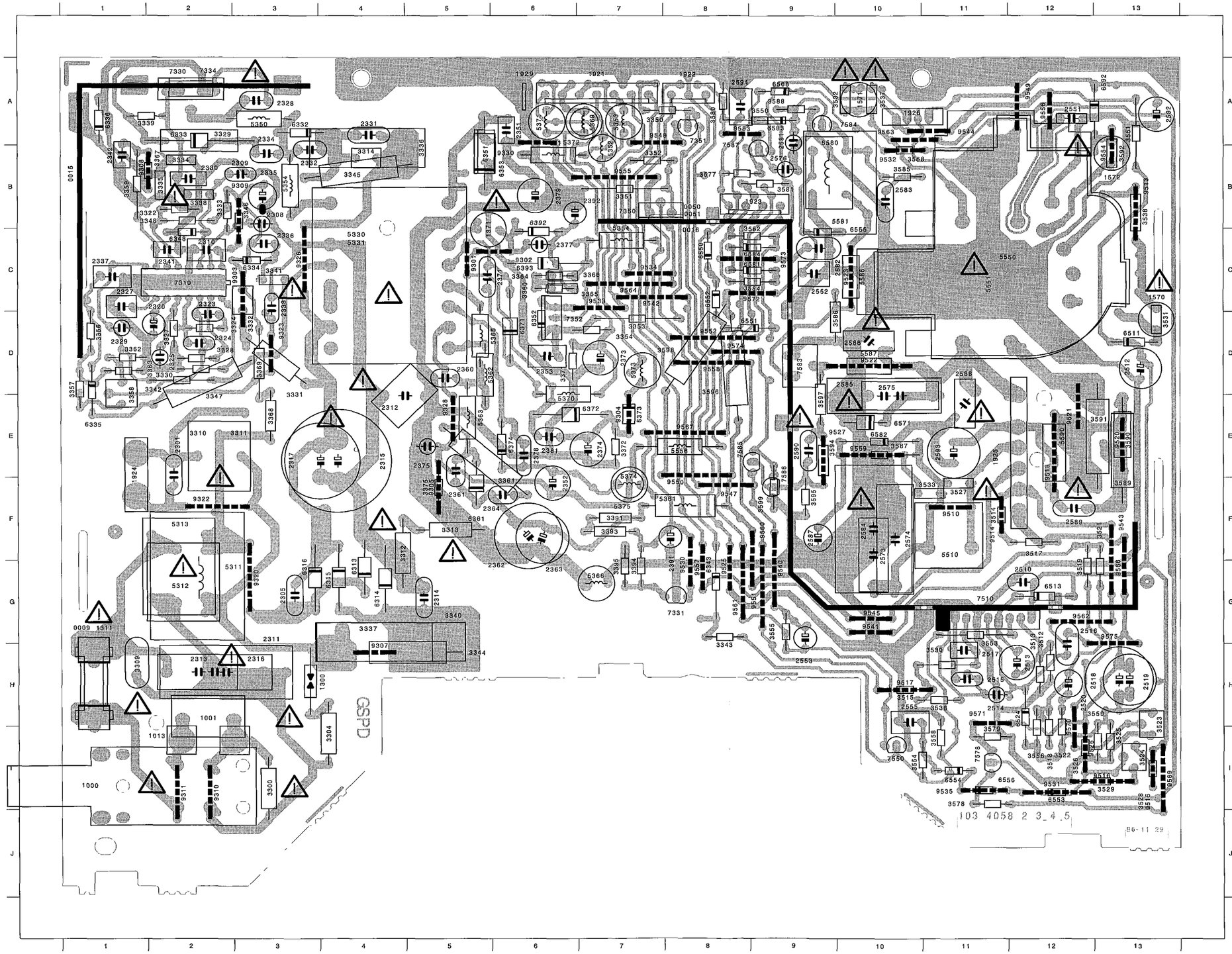

0009	H	1	2588	E	11	3558	I	11	6592	A	13
0015	A	1	2589	F	12	3559	I	13	7310	C	2
0016	B	7	2590	E	9	3568	B	10	7330	A	2
0050	B	8	2592	A	13	3577	B	8	7331	G	8
0051	B	7	2593	E	11	3578	I	11	7334	A	2
1000	I	1	2594	A	8	3579	I	11	7350	B	7
1001	H	2	3300	I	3	3580	A	8	7351	A	8
1013	H	2	3304	I	4	3581	B	9	7352	D	6
1300	H	3	3309	H	1	3582	C	9	7510	G	11
1311	H	1	3310	E	2	3584	C	9	7550	I	10
1371	C	5	3311	E	2	3585	B	10	7578	I	11
1570	D	13	3312	F	4	3586	D	10	7583	D	9
1571	A	10	3313	F	5	3587	E	10	7584	A	9
1572	B	13	3314	B	4	3588	A	9	7585	E	9
1921	A	7	3322	B	2	3589	E	13	7586	F	9
1922	A	8	3324	D	2	3590	E	13	7587	B	9
1923	B	9	3327	D	2	3591	E	13	9301	C	5
1924	E	1	3328	D	2	3592	B	13	9302	C	6
1925	E	12	3329	A	2	3594	E	9	9303	C	3
1926	A	10	3330	D	2	3595	F	9	9304	E	7
1929	A	6	3331	D	3	3596	D	9	9305	F	5
2301	E	2	3332	C	3	3597	E	9	9307	H	4
2305	G	3	3333	B	2	3598	C	9	9308	B	2
2308	B	3	3334	B	2	3599	F	9	9309	B	3
2309	B	3	3335	B	2	5311	G	2	9310	I	2
2310	C	2	3336	B	4	5312	G	2	9311	I	2
2311	H	2	3337	G	4	5313	G	2	9320	G	3
2312	E	4	3338	B	2	5330	C	4	9322	F	2
2313	H	2	3339	A	2	5331	C	4	9323	D	3
2314	G	5	3340	G	4	5350	A	3	9326	C	3
2315	E	4	3341	C	3	5351	B	6	9328	E	5
2316	H	2	3342	D	2	5352	B	7	9330	A	6
2317	E	4	3343	G	8	5353	A	7	9510	F	11
2320	D	2	3344	H	5	5354	B	3	9513	B	13
2323	D	2	3345	B	4	5361	F	8	9514	F	11
2324	D	2	3346	B	3	5362	D	5	9515	I	13
2325	D	2	3347	E	2	5363	E	5	9516	I	13
2327	C	1	3348	B	2	5364	C	7	9517	H	10
2328	A	3	3350	A	8	5365	D	5	9518	E	12
2329	D	1	3351	B	7	5366	G	7	9520	E	13
2330	B	2	3352	B	7	5369	A	7	9521	E	12
2331	A	4	3353	D	7	5370	E	6	9522	D	10
2332	B	3	3354	D	7	5371	A	6	9523	C	10
2334	B	3	3356	D	1	5372	A	7	9525	G	8
2335	B	3	3357	D	1	5373	D	7	9526	I	12
2336	C	3	3358	D	1	5374	F	7	9527	E	9
2337	C	1	3359	B	1	5375	F	7	9530	G	8
2338	C	3	3360	C	6	5510	F	11	9531	I	12
2341	C	2	3361	E	6	5550	C	12	9532	B	10
2342	B	1	3362	D	1	5551	C	12	9533	C	7
2351	A	6	3363	D	1	5556	E	8	9534	C	7
2352	F	6	3364	C	6	5580	B	9	9535	I	11
2353	D	6	3365	C	6	5581	B	10	9540	G	9
2360	D	5	3366	C	6	5586	C	10	9541	G	10
2361	E	5	3367	B	2	5587	D	10	9542	C	7
2362	F	6	3368	E	3	5590	E	12	9543	F	13
2363	F	6	3369	D	3	6313	G	4	9544	A	11
2364	F	6	3371	D	6	6314	G	4	9545	G	10
2371	C	5	3372	E	7	6315	G	4	9547	F	8
2373	D	7	3375	F	5	6316	G	3	9548	A	7
2374	E	7	3391	F	7	6332	A	3	9549	A	12
2375	E	5	3393	F	7	6333	A	2	9550	E	8
2377	C	6	3394	G	7	6334	C	3	9551	F	9
2378	E	6	3395	G	7	6335	D	1	9552	D	8
2379	B	6	3512	H	12	6336	A	1	9553	A	8
2381	E	6	3513	H	12	6343	G	8	9554	B	13
2391	F	8	3514	F	11	6348	C	2	9555	B	7
2392	B	6	3515	H	10	6351	B	5	9556	A	12
2510	G	12	3517	F	12	6352	D	6	9557	G	8
2512	D	13	3518	I	12	6353	B	5	9558	D	8
2513	H	12	3519	G	12	6361	F	5	9559	E	10
2514	H	11	3521	G	13	6371	D	6	9560	G	9
2515	H	11	3522	I	12	6372	E	6	9561	G	8
2516	H	12	3523	H	13	6373	E	7	9562	G	12
2517	H	11	3524	I	13	6374	E	6	9563	A	10
2518	H	13	3525	I	13	6392	C	6	9564	C	7
2519	H	13	3526	I	12	6393	C	6	9566	G	13
2520	H	12	3527	F	11	6511	D	13	9567	E	8
2551	A	12	3528	I	13	6513	G	12	9569	I	13
2552	C	9	3529	I	13	6524	H	12	9570	I	12
2553	G	9	3530	H	11	6550	C	8	9571	H	11
2555	H	10	3531	D	13	6551	D	9	9572	C	9
2573	F	10	3532	A	10	6552	C	8	9573	C	8
2574	G	10	3533	F	11	6553	I	12	9574	D	8
2575	E	10	3536	H	11	6554	I	11	9575	H	13
2576	B	9	3537	A	10	6555	C	9			
2581	A	9	3538	B	13	6556	I	11			
2582	C	9	3550	A	9	6568	A	9			
2583	B	10	3551	A	13	6571	E	10			
2584	F	10	3553	G	11	6581	C	9			
2585	E	10	3554	I	11	6582	E	10			
2586	D	10	3555	G	9	6583	A	9			
2587	F	9	3556	I	12	6584	C	9			

4-2

CRT BOARD (GSPDx)

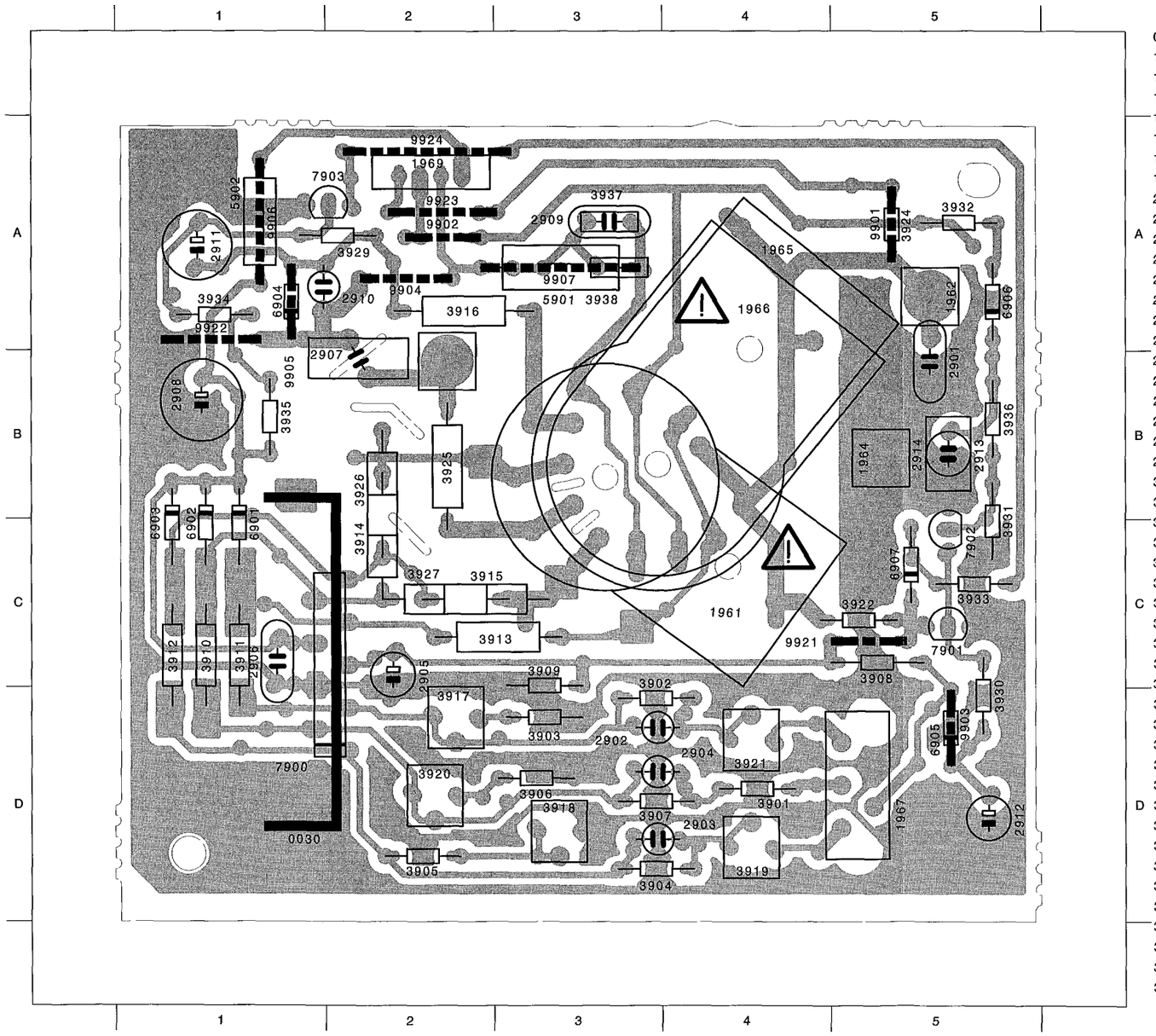

0030	C 2		3929	A 2	
1961	B 4		3930	D 5	
1962	A 5		3931	C 5	
1964	B 5		3932	A 5	
1965	C 3		3933	C 5	
1966	C 3		3934	A 1	
1967	D 5		3935	B 1	
1969	A 2		3936	B 5	
2901	B 5		3937	A 3	
2902	D 3		3938	A 3	
2903	D 3		5901	A 3	
2904	D 3		5902	A 1	
2905	C 2		6901	C 1	
2906	C 1		6902	C 1	
2907	B 2		6903	C 1	
2908	B 1		6904	A 1	
2909	A 3		6905	D 5	
2910	A 1		6906	A 5	
2911	A 1		6907	C 5	
2912	D 5		7900	C 2	
2913	B 5		7901	C 5	
2914	B 5		7902	C 5	
3901	D 4		7903	A 2	
3902	D 3		9901	A 5	
3903	D 3		9902	A 2	
3904	D 3		9903	D 5	
3905	D 2		9904	A 2	
3906	D 3		9905	A 1	
3907	D 3		9906	A 1	
3908	C 5		9907	A 3	
3909	C 3		9921	C 5	
3910	C 1		9922	A 1	
3911	C 1		9923	A 2	
3912	C 1		9924	A 2	
3913	C 3				
3914	C 2				
3915	C 2				
3916	A 2				
3917	D 2				
3918	D 3				
3919	D 4				
3920	D 2				
3921	D 4				
3922	C 5				
3924	A 5				
3925	B 2				
3926	B 2				
3927	C 2				

SMALL SIGNAL BOARD (KSMDMx) - COPPER SIDE

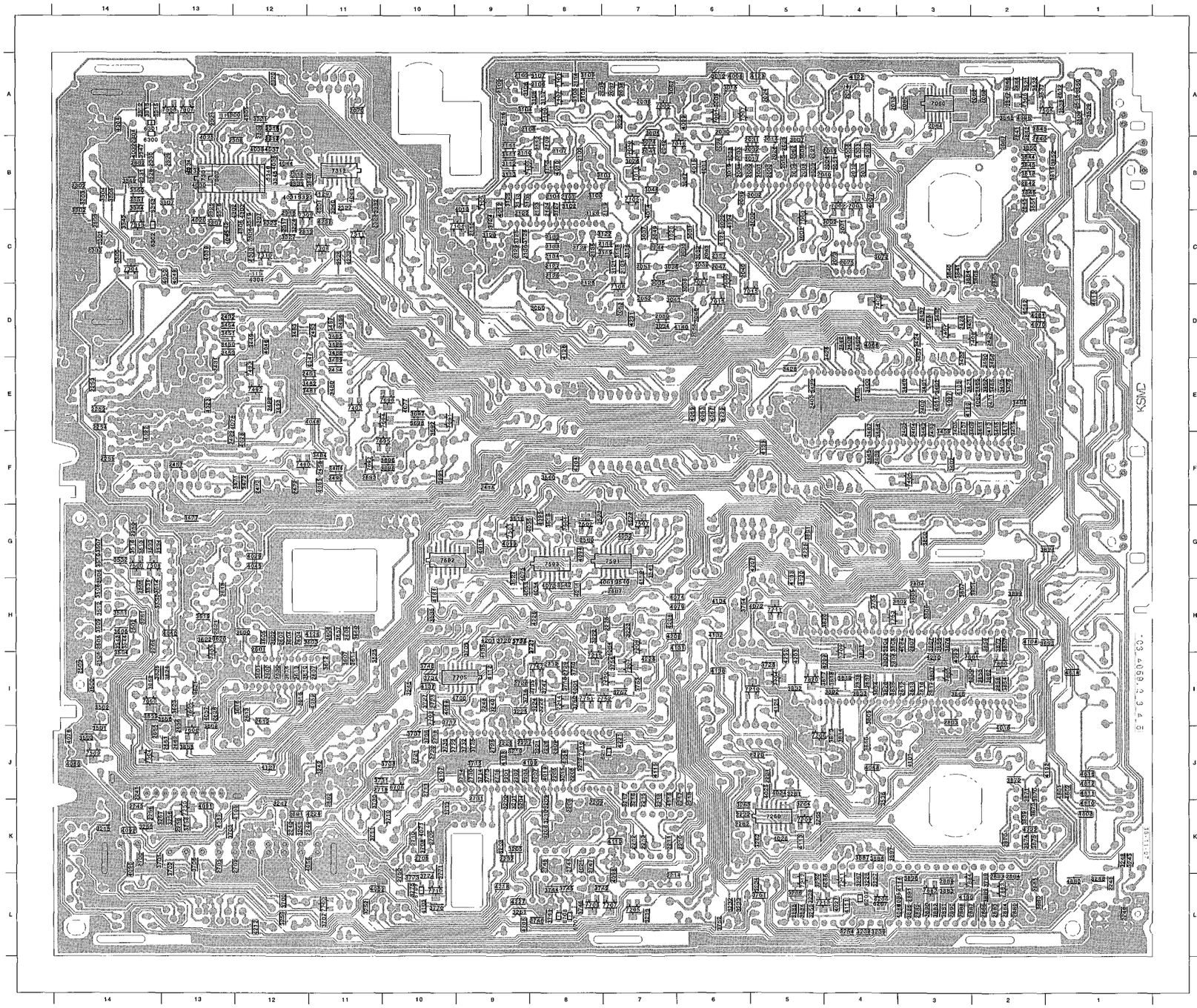

2000 B 6	2245 L 1	2741 K 8	3213 L 7	3453 D 13	3708 K 13	3885 L 5	4100 K 12	7102 B 8
2001 B 5	2246 L 1	2745 K 8	3215 K 14	3454 D 13	3707 L 11	3886 L 3	4101 J 3	7103 B 9
2002 B 5	2248 I 9	2746 L 8	3216 K 7	3455 E 2	3708 K 10	3887 K 4	4102 J 1	7104 C 9
2003 B 5	2249 K 12	2747 K 8	3217 K 7	3456 E 2	3709 H 9	3888 K 4	4103 L 10	7105 B 7
2008 B 5	2250 G 14	2750 L 10	3219 J 9	3457 D 3	3710 K 10	3889 L 2	4104 H 2	7106 D 7
2009 B 5	2252 E 14	2803 I 3	3221 J 8	3458 D 3	3711 K 11	3890 L 3	4105 E 3	7107 A 8
2010 B 4	2253 E 14	2804 H 3	3222 H 8	3459 F 3	3713 J 9	3891 G 5	4107 J 10	7205 L 7
2011 B 4	2254 E 14	2806 I 4	3223 H 7	3460 D 4	3714 J 9	3892 I 4	4108 J 9	7206 J 5
2012 B 4	2255 F 14	2807 H 3	3224 I 8	3464 F 11	3715 J 9	3893 H 1	4109 J 8	7207 I 7
2013 A 4	2256 K 13	2809 J 8	3225 I 9	3465 E 2	3716 I 9	3894 G 1	4110 K 7	7208 H 7
2014 A 4	2258 K 14	2812 I 3	3226 L 4	3467 E 4	3718 I 8	3896 L 3	4111 L 4	7209 K 5
2019 B 4	2261 H 14	2813 I 3	3227 L 4	3471 F 12	3719 K 10	3897 K 4	4112 I 9	7210 I 5
2021 B 5	2262 K 6	2816 I 3	3228 I 8	3472 F 12	3720 H 9	3899 H 2	4113 K 5	7211 L 4
2024 A 5	2263 H 14	2817 I 3	3229 L 5	3475 E 2	3721 H 8	4000 C 12	4114 L 3	7212 L 5
2025 B 5	2302 B 14	2837 I 4	3230 L 5	3476 E 2	3722 H 9	4001 I 8	4115 J 7	7213 L 5
2026 B 5	2303 C 14	2838 I 4	3232 L 6	3477 G 13	3725 J 9	4002 L 11	4118 J 7	7214 I 8
2028 B 8	2304 B 14	2840 B 2	3233 L 6	3480 E 11	3727 I 10	4003 B 4	4119 G 7	7215 I 8
2030 A 6	2306 C 12	2841 A 2	3234 L 5	3481 E 11	3728 I 5	4004 A 14	4120 G 5	7216 J 8
2031 B 5	2307 C 13	2842 B 2	3236 L 4	3482 E 11	3730 K 11	4005 B 4	4121 I 5	7250 K 13
2032 B 5	2308 B 12	2843 A 2	3239 L 4	3483 D 12	3731 J 11	4006 B 4	4122 A 4	7260 K 5
2033 B 6	2309 A 12	2844 A 2	3240 I 9	3484 F 11	3732 J 9	4007 B 4	4123 A 5	7300 B 12
2034 B 6	2313 A 12	2845 B 2	3241 K 12	3485 D 11	3733 J 10	4008 A 6	4124 C 6	7301 B 13
2035 A 7	2314 B 12	2863 C 2	3242 J 11	3486 D 11	3734 I 10	4009 A 6	4125 C 6	7304 C 14
2036 A 7	2315 B 12	2870 K 2	3243 K 1	3487 D 11	3735 I 8	4010 B 8	4126 D 8	7306 A 13
2037 A 7	2317 C 12	2880 L 2	3245 I 10	3488 D 11	3736 J 10	4011 B 6	4127 J 12	7307 A 13
2038 A 7	2318 C 12	2882 L 3	3246 L 1	3489 E 11	3737 J 10	4012 C 9	4128 H 11	7308 C 11
2039 B 6	2319 C 12	2883 L 2	3247 K 12	3490 E 2	3738 J 10	4013 B 9	4129 B 11	7309 C 12
2040 C 6	2321 A 13	2884 L 2	3248 K 1	3491 E 3	3741 L 8	4014 C 7	4130 L 3	7310 C 12
2041 B 7	2323 C 11	2885 L 2	3251 L 9	3492 E 2	3742 L 8	4015 B 6	4131 H 6	7311 C 11
2042 B 7	2325 C 13	2886 L 2	3252 L 11	3493 E 12	3744 L 8	4016 J 2	4132 H 6	7312 B 11
2043 C 6	2326 B 14	2887 L 3	3253 L 5	3496 E 12	3745 L 8	4018 G 9	4133 G 5	7313 C 14
2044 C 7	2329 B 13	2888 L 3	3254 L 4	3500 I 14	3746 L 8	4019 J 8	4134 H 6	7403 E 11
2047 C 6	2330 B 14	2889 L 3	3255 K 14	3501 J 14	3747 I 8	4020 G 13	4136 I 6	7405 F 3
2049 C 7	2331 B 14	2890 L 3	3256 K 13	3502 I 14	3748 I 10	4021 K 8	4137 I 10	7406 D 4
2050 D 7	2332 B 14	2891 L 3	3257 K 13	3503 J 14	3750 I 8	4022 F 14	4138 H 9	7407 D 3
2051 C 7	2333 C 14	2893 L 2	3258 K 13	3504 I 14	3751 L 5	4023 E 13	4139 F 5	7408 D 2
2052 D 7	2400 E 3	2894 L 2	3259 L 12	3505 H 14	3752 L 6	4024 J 5	4140 D 8	7490 F 12
2053 D 7	2403 E 5	3000 C 5	3261 J 5	3506 G 14	3753 I 7	4025 J 5	4180 E 3	7492 E 12
2055 D 6	2404 E 3	3001 C 5	3262 K 5	3507 G 14	3754 H 6	4026 K 5	4181 H 10	7493 E 12
2060 A 3	2405 E 3	3002 C 4	3263 K 6	3508 H 14	3755 H 4	4027 L 4	4201 H 9	7500 G 14
2062 B 5	2415 F 9	3003 B 5	3264 K 5	3509 H 14	3756 I 7	4028 F 12	4203 I 5	7501 G 8
2064 A 3	2427 D 2	3004 B 4	3265 K 5	3510 G 14	3757 I 7	4029 G 12	4204 F 8	7502 G 8
2066 A 2	2428 D 3	3007 B 5	3266 L 5	3511 H 14	3760 I 8	4030 B 13	4205 L 9	7503 G 9
2067 B 2	2429 F 13	3008 B 5	3267 L 4	3512 H 14	3770 L 10	4031 B 12	4206 H 7	7504 J 14
2068 A 2	2431 E 13	3009 A 6	3300 C 14	3513 G 14	3771 K 10	4032 B 14	4207 G 5	7505 A 1
2070 A 11	2432 D 13	3012 A 6	3301 C 14	3514 H 14	3773 L 10	4033 B 13	4208 H 7	7506 A 2
2071 C 4	2433 E 3	3013 B 5	3302 C 14	3516 G 14	3774 L 10	4034 B 13	4209 I 4	7507 G 7
2073 C 4	2451 E 11	3014 B 5	3303 B 14	3518 G 9	3775 L 10	4035 B 13	4210 I 3	7508 G 14
2075 C 4	2453 D 11	3015 A 6	3304 B 14	3519 G 8	3799 L 2	4036 B 12	4211 H 8	7509 J 14
2100 A 9	2454 E 11	3017 B 5	3305 B 14	3521 A 2	3800 G 3	4037 B 12	4212 L 12	7591 G 7
2101 B 8	2456 D 11	3018 B 6	3307 B 13	3522 A 2	3801 H 2	4038 B 12	4213 L 9	7592 G 10
2102 B 8	2457 F 13	3019 B 6	3312 A 14	3523 G 8	3802 H 3	4039 C 13	4221 J 7	7593 G 8
2103 A 9	2458 F 11	3022 C 6	3313 A 14	3524 G 7	3803 I 4	4040 A 13	4222 K 2	7603 I 13
2104 B 8	2471 E 2	3023 A 7	3315 A 14	3525 I 11	3804 H 4	4041 B 11	4224 K 11	7605 I 13
2105 B 9	2472 F 12	3024 B 7	3316 A 12	3527 H 9	3805 H 3	4042 C 13	4225 G 5	7608 J 13
2108 A 8	2473 F 12	3025 A 7	3317 B 12	3529 A 1	3806 H 3	4043 C 13	4226 H 8	7650 I 14
2107 B 8	2490 F 11	3026 B 7	3318 C 13	3530 H 14	3807 H 3	4044 B 12	4227 L 9	7691 E 10
2108 A 8	2502 H 14	3031 C 6	3319 C 12	3531 H 14	3808 H 4	4045 G 12	4228 I 7	7692 F 11
2109 B 8	2503 I 14	3032 C 6	3320 A 12	3532 G 14	3809 I 4	4046 D 12	4229 E 6	7694 E 10
2110 B 9	2504 I 14	3033 C 6	3321 A 12	3533 G 14	3810 J 4	4047 E 11	4230 I 5	7695 F 10
2111 B 9	2505 H 14	3034 D 7	3323 C 12	3534 G 14	3812 B 2	4048 E 11	4231 D 7	7696 E 10
2112 B 8	2506 H 14	3035 D 7	3324 C 12	3535 H 10	3813 J 4	4049 C 13	4232 C 11	7700 L 11
2113 B 9	2507 H 7	3036 C 7	3325 B 12	3536 J 4	3814 J 4	4050 C 13	4233 C 11	7703 I 10
2114 A 8	2509 A 1	3037 C 7	3326 C 11	3537 A 2	3815 B 1	4051 H 7	4300 A 12	7704 I 5
2115 C 9	2512 A 1	3038 D 6	3327 C 12	3538 A 1	3817 I 4	4052 G 7	4301 B 11	7705 I 9
2116 A 9	2515 A 1	3039 C 6	3332 B 11	3540 H 7	3818 I 4	4053 H 9	4302 C 12	7707 L 7
2117 C 8	2560 G 8	3041 D 7	3338 B 11	3541 G 7	3819 I 4	4054 H 8	4303 C 12	7708 L 8
2118 C 7	2600 I 12	3046 D 6	3339 B 12	3542 H 8	3820 H 4	4055 G 8	4304 C 12	7709 H 4
2119 B 7	2601 H 12	3047 B 6	3340 B 11	3543 H 14	3821 H 4	4056 K 11	4305 A 12	7710 L 10
2121 C 7	2602 H 12	3048 B 7	3342 C 14	3544 H 14	3826 I 4	4057 I 13	4306 C 12	7711 H 5
2122 C 9	2604 H 12	3050 D 8	3343 B 14	3545 A 2	3832 I 5	4058 J 8	4307 C 12	7750 I 7
2123 B 8	2606 H 11	3051 B 4	3344 B 14	3550 A 1	3833 I 4	4059 I 11	4700 I 9	7751 I 8
2124 B 8	2607 I 11	3062 A 7	3345 B 12	3560 F 8	3834 I 4	4060 H 13	4800 I 3	7752 I 7
2125 C 8	2608 H 11	3072 C 4	3346 B 12	3600 H 12	3836 I 4	4061 E 3	4801 J 1	7753 H 4
2126 C 8	2612 I 12	3100 B 8	3347 B 14	3601 I 12	3837 I 3	4062 E 2	4802 J 1	7762 I 8
2127 C 8	2613 I 12	3101 B 7	3348 B 11	3602 H 12	3839 K 2	4063 E 6	4803 K 1	7805 I 3
2128 C 8	2618 H 13	3102 B 8	3349 B 14	3603 H 11	3840 C 3	4064 H 7	4810 K 1	7820 I 5
2129 C 9	2621 H 13	3103 A 8	3350 B 14	3604 H 12	3841 C 3	4065 F 11	4811 J 1	7860 I 2
2130 C 9	2626 I 13	3104 A 9	3351 B 14	3605 H 12	3842 A 2	4066 D 4	4812 J 1	7861 I 2
2132 C 8	2630 I 12	3105 A 8	3400 E 4	3607 I 11	3843 B 2	4067 E 6	4813 J 1	7882 L 3
2133 C 8	2655 J 14	3106 A 9	3401 E 3	3608 J 13	3844 B 2	4068 J 4	4814 I 1	7883 L 2
2134 C 8	2658 J 13	3107 A 8	3402 F 3	3610 I 12	3845 B 2	4069 E 6	4815 D 1	7884 L 3
2135 C 8	2661 J 13	3108 A 8	3404 E 2	3611 I 11	3846 A 2	4070 D 2	4880 L 1	
2201 J 9	2662 J 13	3109 A 8	3405 E 3	3612 I 11	3847 A 2	4071 K 10	6206 L 4	
2202 J 9	2691 K 12	3110 B 6	3406 D 4	3613 I 12	3850 B 2	4072 H 5	6207 L 4	
2204 J 9	2692 K 11	3111 B 9	3407 E 3	3614 I 12	3851 B 2	4073 H 8	6209 L 4	
2205 J 8	2693 F 11	3112 B 9	3409 E 2	3615 I 12	3852 B 1	4074 H 6	6210 J 7	
2206 K 8	2700 K 14	3113 B 9	3411 E 2	3616 I 12	3854 I 2	4075 G 9	6300 A 14	
2207 J 8	2702 K 12	3116 C 7	3413 E 2	3619 H 13	3855 I 2	4076 J 14	6301 A 14	
2208 J 8	2703 K 13	3117 A 8	3415 E 2	3620 H 13	3857 H 2	4077 E 10	6302 C 14	
2209 K 8	2708 K 10	3118 C 7	3417 E 2	3621 I 13	3858 I 2	4078 E 13	6706 J 10	
2210 K 6	2709 K 10	3119 C 7	3419 E 2	3622 H 13	3859 H 2	4079 H 6	6707 L 8	
2211 K 7	2710 K 10	3121 C 7	3421 E 3	3623 I 13	3862 I 2	4080 J 14	6708 L 8	
2212 K 7	2711 J 10	3122 C 7	3422 E 3	3624 I 13	3863 C 2	4081 D 2	6709 L 10	
2213 K 7	2714 J 9	3123 B 9	3424 D 3	3625 I 14	3864 C 3	4082 D 2	7000 C 5	
2214 L 7	2716 J 9	3124 C 9	3426 D 4	3655 J 13	3865 H 3	4084 H 3	7001 A 6	
2215 K 7	2717 I 10	3125 C 9	3428 E 5	3656 I 13	3866 I 3	4085 L 3	7002 B 4	
2216 J 6	2718 J 10	3126 C 9	3429 E 5	3657 H 11	3867 H 3	4086 L 4	7003 B 4	
2217 J 6	2719 J 11	3127 B 8	3430 D 3	3658 I 14	3870 J 2	4087 K 13	7005 A 7	
2218 K 7	2720 J 10	3128 C 8	3431 D 3	3659 I 14	3871 J 2	4088 L 3	7007 A 8	
2220 J 5	2721 J 10	3129 C 9	3432 E 4	3660 H 11	3872 J 2	4089 I 10	7009 C 6	
2221 J 5	2722 J 10	3200 K 9	3437 D 3	3691 F 10	3873 K 2	4090 K 14	7013 D 6	
2222 K 6	2723 I 10	3201 K 9	3439 F 4	3692 E 10	3874 K 2	4091 K 13	7015 D 5	
2225 H 7	2725 J 9	3203 K 9	3442 D 4	3695 F 10	3875 K 2	4092 K 14	7016 B 6	
2226 J 8	2726 I 9	3204 K 9	3443 E 3	3696 F 10	3876 K 3	4093 I 3	7018 B 7	
2227 J 8	2727 H 8	3205 K 9	3444 E 4	3697 E 10	3877 H 2	4094 G 8	7019 B 7	
2228 J 9	2728 H 9	3208 K 8	3445 F 4	3698 E 10	3880 L 2	4095 G 8	7020 C 7	
2232 K 9	2729 I 8	3209 K 8	3446 E 3	3700 L 12	3881 L 3	4096 A 2	7021 C 6	
2240 K 12	2730 J 9	3210 K 8	3449 D 12	3701 K 14	3882 L 3	4097 E 3	7060 A 3	
2241 J 14	2731 J 9	3211 J 8	3450 D 13	3702 K 13	3883 L 3	4098 L 7	7100 A 8	
2243 K 14	2732 I 8	3212 J 8	3451 D 13	3705 K 13	3884 L 5	4099 G 9	7101 A 8	

4-4

SMALL SIGNAL BOARD (KSMDMx) - COMPONENTS SIDE

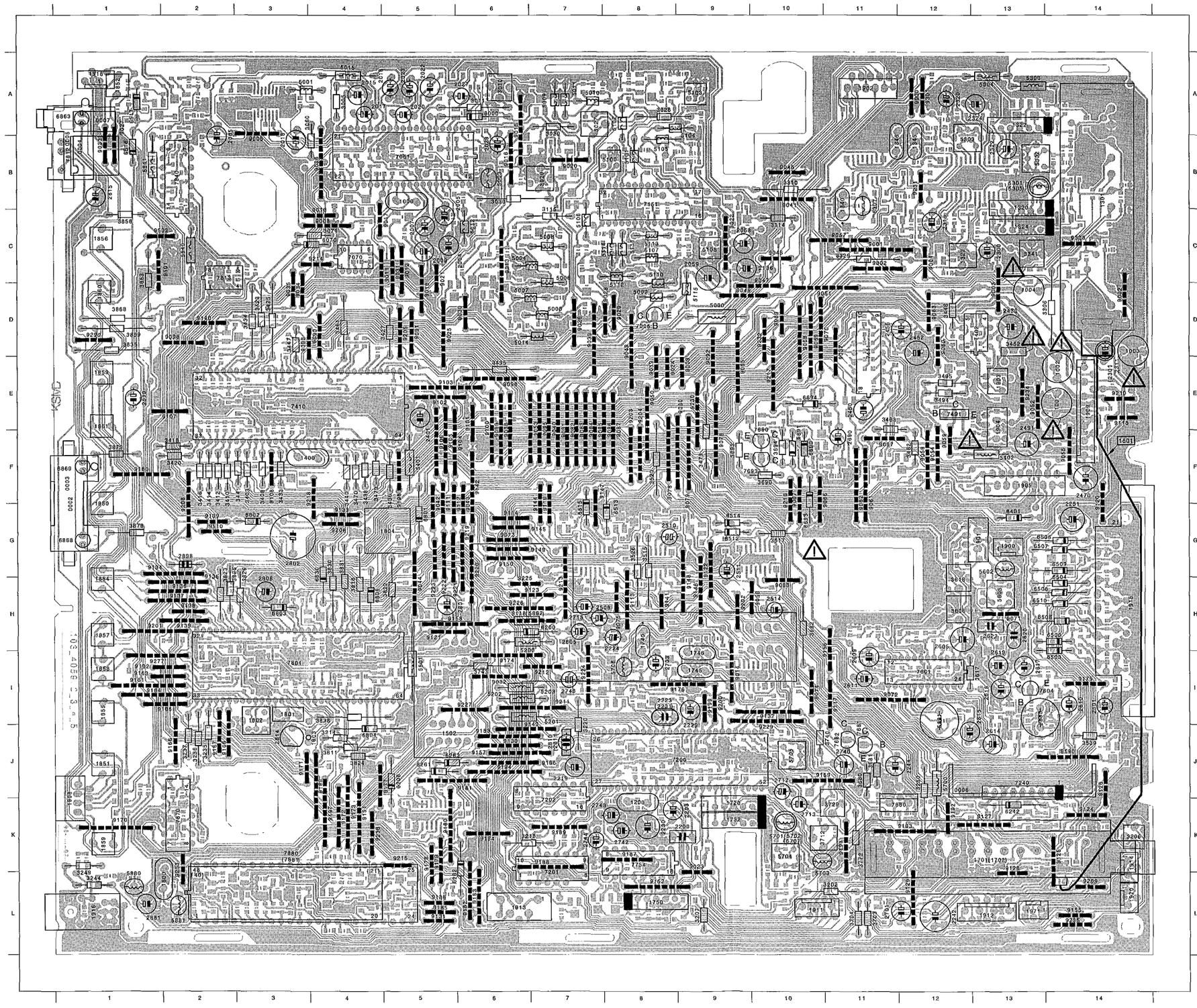

0002	F 1	2514	H 10	3772	K 11	6805	H 4	9083	E 7	9198	F 5
0003	G 1	2605	H 12	3811	J 4	6830	G 4	9084	E 7	9199	I 9
0004	A 1	2609	I 11	3816	H 4	6863	A 1	9085	E 7	9200	I 9
0005	A 1	2610	I 14	3822	H 5	6868	G 1	9086	E 8	9201	H 1
0006	J 13	2611	I 11	3823	H 2	6869	F 1	9087	E 8	9202	H 9
0007	A 1	2614	J 13	3824	J 4	7006	D 8	9088	H 10	9203	F 8
1000	B 5	2615	J 12	3825	H 2	7051	B 5	9089	D 10	9204	F 8
1001	E 14	2616	I 13	3829	H 3	7070	C 4	9090	D 4	9205	D 5
1002	E 14	2617	I 13	3830	H 4	7151	B 8	9091	D 5	9206	G 4
1003	D 14	2619	I 13	3831	H 4	7200	J 9	9092	E 9	9208	Q 2
1004	D 13	2620	H 13	3835	D 1	7201	K 7	9093	D 4	9209	L 14
1200	K 8	2622	H 13	3838	I 4	7202	K 7	9095	E 7	9210	E 14
1301	B 14	2690	F 11	3853	C 1	7240	J 13	9096	E 6	9211	I 7
1320	C 13	2701	L 12	3856	C 1	7402	D 13	9097	F 11	9212	I 7
1322	A 13	2712	J 10	3868	D 1	7410	E 3	9098	D 2	9213	H 7
1324	C 13	2713	K 10	3869	D 1	7411	D 11	9099	E 6	9214	C 4
1340	B 11	2715	H 7	3878	G 1	7491	E 12	9100	E 6	9215	K 5
1345	B 12	2733	I 8	3879	F 1	7601	I 12	9101	E 6	9216	F 10
1346	B 11	2740	J 11	5000	D 9	7604	I 13	9102	E 5	9217	E 10
1400	F 3	2742	K 8	5001	A 3	7680	K 12	9103	E 5	9218	F 4
1501	E 14	2743	K 8	5002	D 8	7681	J 11	9104	F 5	9219	G 6
1502	H 5	2744	K 7	5003	B 6	7682	J 11	9105	F 5	9220	G 6
1701	K 13	2748	I 7	5004	C 7	7690	F 10	9106	F 5	9221	G 5
1702	K 13	2801	H 5	5005	D 7	7693	F 10	9107	E 2	9222	G 5
1720	K 9	2802	G 3	5006	D 7	7754	K 8	9108	F 3	9223	G 5
1732	K 9	2805	H 7	5007	D 7	7801	I 3	9109	G 2	9224	I 7
1740	H 8	2808	H 3	5008	C 7	7812	B 1	9110	G 2	9225	H 6
1745	I 9	2810	J 7	5009	A 7	7813	C 2	9111	F 5	9226	H 6
1746	I 9	2811	J 7	5010	A 7	7840	B 2	9112	G 5	9227	I 6
1750	L 8	2814	J 3	5011	A 7	7870	K 2	9113	H 8	9229	I 10
1800	L 2	2815	B 1	5012	C 6	7880	L 3	9114	G 6	9230	E 9
1801	I 3	2861	L 1	5014	D 7	7881	L 3	9115	E 14	9231	B 12
1802	I 3	2898	G 2	5015	A 4	9000	A 12	9117	I 11	9232	D 10
1803	J 3	3005	A 4	5100	B 8	9001	C 11	9118	H 6	9233	K 2
1804	G 5	3010	A 6	5101	B 8	9002	D 14	9119	G 7	9234	E 13
1850	G 1	3011	A 6	5102	A 8	9003	D 13	9120	F 14	9235	L 14
1851	J 1	3020	A 7	5103	A 9	9004	C 12	9121	H 5	9236	K 4
1852	A 1	3027	A 7	5104	A 8	9005	A 3	9122	G 9	9277	I 1
1853	E 1	3028	A 8	5105	B 8	9006	B 4	9123	H 7	9290	D 1
1854	H 1	3029	B 7	5106	C 7	9008	C 4	9124	K 14	9301	A 12
1855	I 1	3030	B 6	5107	C 8	9009	E 9	9125	K 14	9302	C 11
1856	C 1	3060	B 4	5108	C 9	9010	C 4	9126	J 14	9303	C 14
1857	H 1	3071	C 4	5110	D 8	9011	C 4	9127	K 13	9501	C 1
1858	I 1	3114	C 10	5111	C 8	9012	C 5	9128	L 13	9502	C 1
1859	K 1	3115	C 7	5112	C 8	9013	C 6	9129	L 12		
1860	D 1	3202	L 11	5113	C 8	9014	I 9	9130	J 6		
1861	E 1	3206	K 14	5114	C 8	9015	A 6	9131	L 5		
1900	G 13	3207	L 9	5115	D 9	9016	B 6	9132	I 10		
1901	G 13	3214	J 4	5200	H 6	9017	C 4	9133	G 4		
1902	A 11	3218	K 6	5201	I 6	9018	D 5	9134	G 2		
1903	E 13	3220	J 7	5202	I 6	9019	E 8	9135	H 2		
1904	E 13	3235	J 2	5203	I 6	9020	B 7	9136	H 2		
1905	F 13	3236	J 2	5300	A 13	9021	C 5	9137	H 2		
1908	K 1	3237	J 2	5301	B 13	9022	C 9	9138	H 2		
1909	E 14	3244	L 1	5302	B 13	9023	L 9	9139	H 2		
1911	L 10	3249	K 1	5303	B 12	9024	E 8	9140	D 2		
1912	L 13	3250	J 12	5304	A 13	9025	D 5	9141	H 8		
1913	L 6	3306	D 14	5305	B 13	9026	D 7	9142	F 6		
1914	K 14	3310	B 10	5307	B 11	9027	B 1	9143	J 6		
1915	H 14	3322	C 12	5401	F 5	9028	D 8	9144	G 7		
1916	L 1	3329	C 11	5402	F 13	9029	D 8	9145	G 6		
1918	A 1	3341	C 13	5601	I 12	9030	D 6	9146	H 9		
1970	L 14	3403	F 3	5602	G 13	9031	C 5	9147	G 7		
1971	L 13	3408	F 3	5603	H 13	9032	I 6	9148	H 9		
2004	C 5	3410	F 2	5650	I 13	9033	B 1	9149	G 6		
2005	C 5	3412	F 2	5700	J 12	9034	D 3	9150	G 6		
2007	C 5	3414	F 2	5701	K 10	9035	D 3	9151	K 4		
2009	C 5	3416	F 2	5702	K 10	9037	D 11	9152	L 8		
2015	A 4	3418	F 2	5703	K 10	9038	E 6	9153	J 6		
2016	B 3	3420	F 2	5704	K 10	9039	D 7	9155	L 14		
2017	A 4	3423	D 3	5705	J 10	9040	E 7	9156	H 11		
2018	A 5	3425	D 3	5706	I 8	9041	B 10	9157	J 6		
2020	A 5	3427	D 5	5707	K 10	9042	G 5	9158	H 5		
2022	A 5	3433	F 3	5801	I 5	9043	G 6	9159	J 10		
2023	A 5	3434	D 3	5840	C 2	9044	H 5	9160	F 1		
2027	A 6	3435	E 6	5841	B 1	9045	B 10	9161	I 1		
2029	B 6	3436	F 5	5880	L 1	9046	C 10	9162	I 2		
2058	C 9	3438	F 4	5881	L 2	9047	D 10	9163	I 2		
2059	C 9	3440	F 4	5882	H 6	9048	D 9	9164	I 1		
2065	B 2	3441	F 3	6000	A 6	9049	D 8	9165	I 2		
2136	C 9	3447	D 3	6070	C 4	9050	E 8	9166	J 2		
2200	K 9	3448	D 12	6200	H 7	9051	D 11	9167	J 2		
2203	K 8	3452	D 13	6208	J 5	9052	E 13	9168	J 2		
2219	J 7	3461	D 4	6242	K 13	9053	E 7	9169	J 4		
2223	I 8	3462	F 12	6261	J 5	9054	F 12	9170	K 1		
2224	H 8	3463	E 11	6262	K 5	9055	F 14	9171	J 3		
2229	I 9	3470	F 4	6263	J 5	9056	H 10	9172	K 4		
2230	K 8	3473	F 4	6401	G 13	9057	C 11	9173	K 4		
2231	I 8	3479	F 9	6500	H 14	9058	F 12	9174	I 6		
2242	L 12	3494	E 12	6503	I 14	9059	F 12	9175	I 14		
2244	J 11	3495	E 12	6504	H 14	9060	D 12	9176	I 9		
2251	G 14	3515	G 8	6505	G 14	9061	F 11	9177	J 4		
2300	C 13	3517	G 10	6506	H 14	9062	F 11	9178	K 5		
2301	D 14	3520	F 8	6507	G 14	9063	D 12	9179	K 5		
2311	D 14	3526	G 8	6508	H 14	9065	E 9	9180	K 5		
2316	C 12	3539	J 14	6509	G 14	9066	F 10	9181	J 5		
2320	A 12	3606	H 12	6510	H 14	9067	F 10	9182	L 6		
2322	B 13	3617	I 12	6512	G 9	9068	D 10	9183	L 6		
2324	A 13	3618	H 12	6513	G 8	9069	D 10	9184	K 6		
2401	E 5	3680	J 11	6514	G 9	9070	D 10	9185	L 5		
2430	D 13	3681	J 11	6515	G 7	9071	H 13	9186	L 5		
2450	E 11	3682	H 10	6516	B 1	9072	I 11	9187	K 8		
2452	D 12	3690	F 10	6517	A 1	9073	G 6	9188	K 7		
2455	D 12	3693	F 9	6690	F 10	9074	I 10	9189	K 7		
2470	F 14	3694	F 10	6691	F 10	9075	H 8	9190	J 14		
2491	F 13	3703	L 11	6693	F 10	9076	F 9	9191	K 11		
2501	I 14	3704	L 11	6694	E 10	9078	F 8	9192	K 12		
2508	H 7	3712	K 10	6801	G 5	9079	F 9	9193	K 12		
2510	G 8	3729	K 11	6802	G 3	9080	F 9	9194	J 6		
2511	G 9	374D	J 10	6803	H 3	9081	F 7	9195	J 6		
2513	E 1	3743	I 6	6804	J 4	9082	F 7	9197	K 4		

SENSOR PRINT

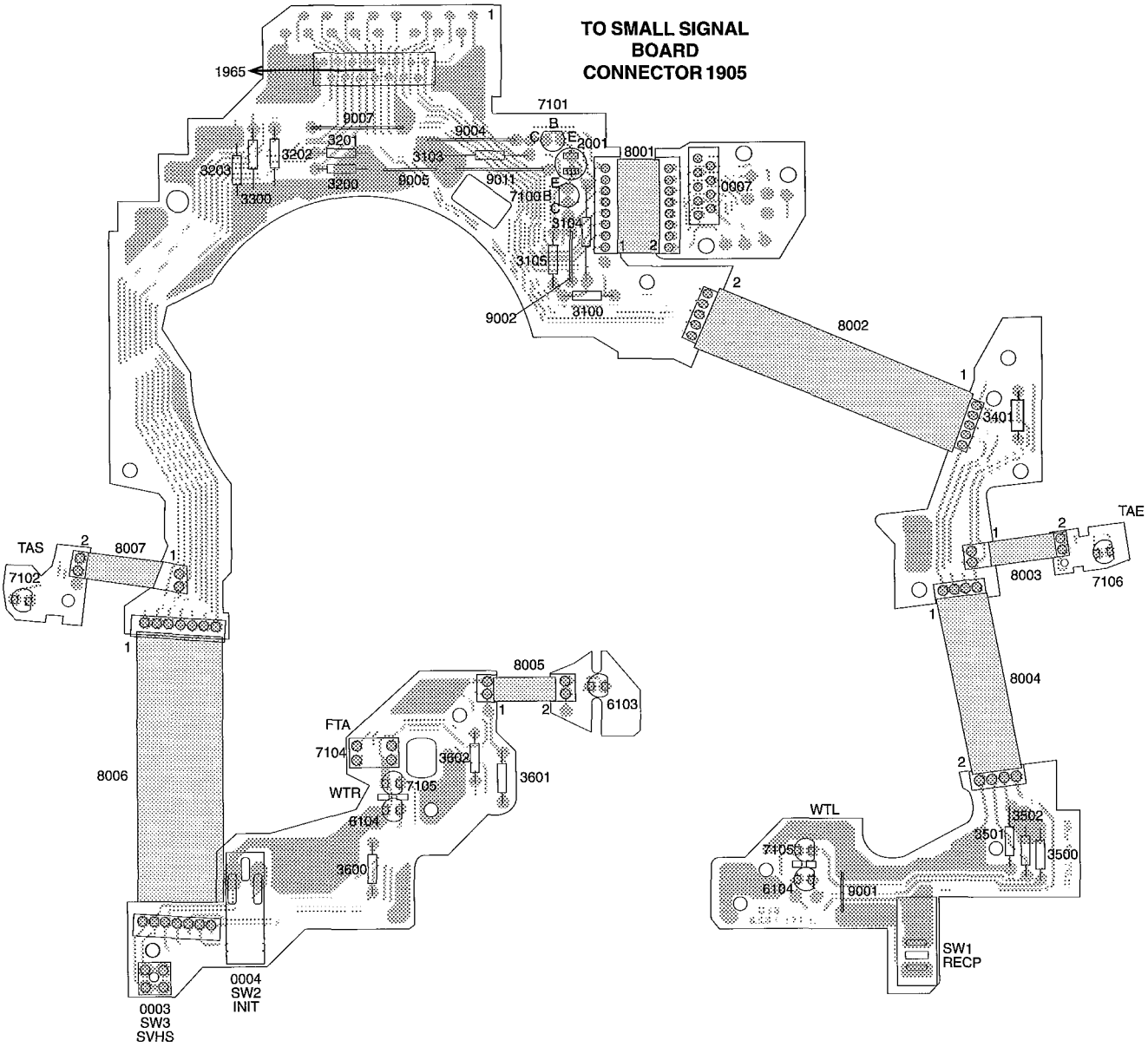

KEYBOARD (PCKB)

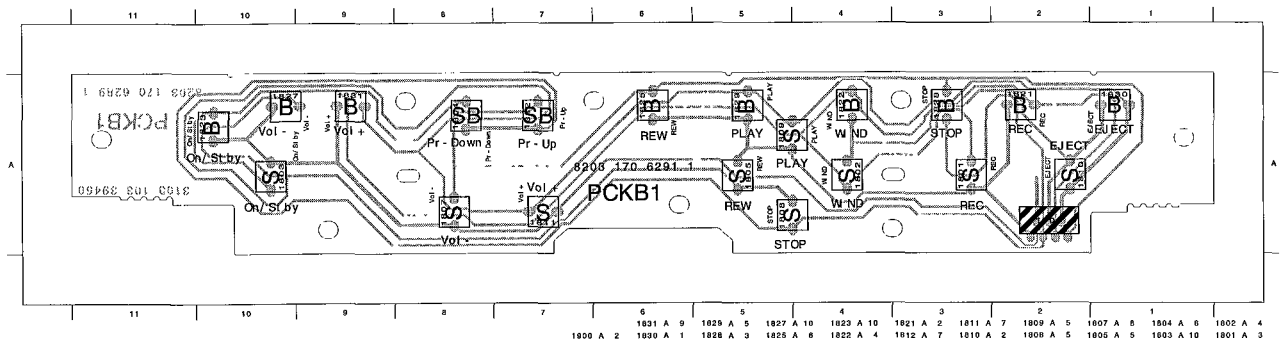

NOTE: B= HITACHI

HEAD AMPLIFIER (OHA)

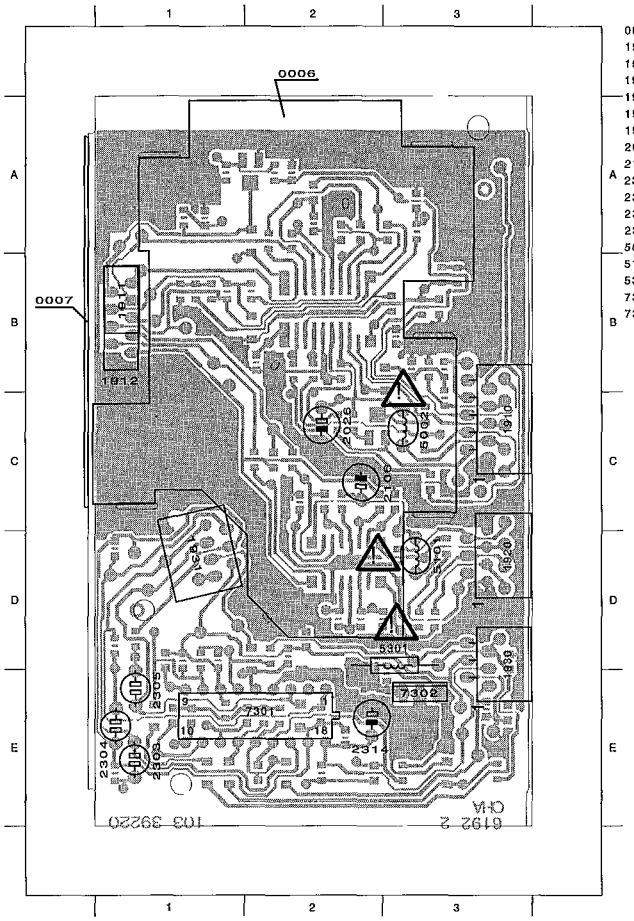

0006 A 2
1910 C 3
1911 B 1
1912 B 1
1920 D 3
1930 D 3
1931 D 1
2026 C 2
2106 C 2
2303 E 1
2304 E 1
2305 E 1
2314 E 2
5002 C 3
5101 D 3
5301 D 3
7301 E 2
7302 E 3

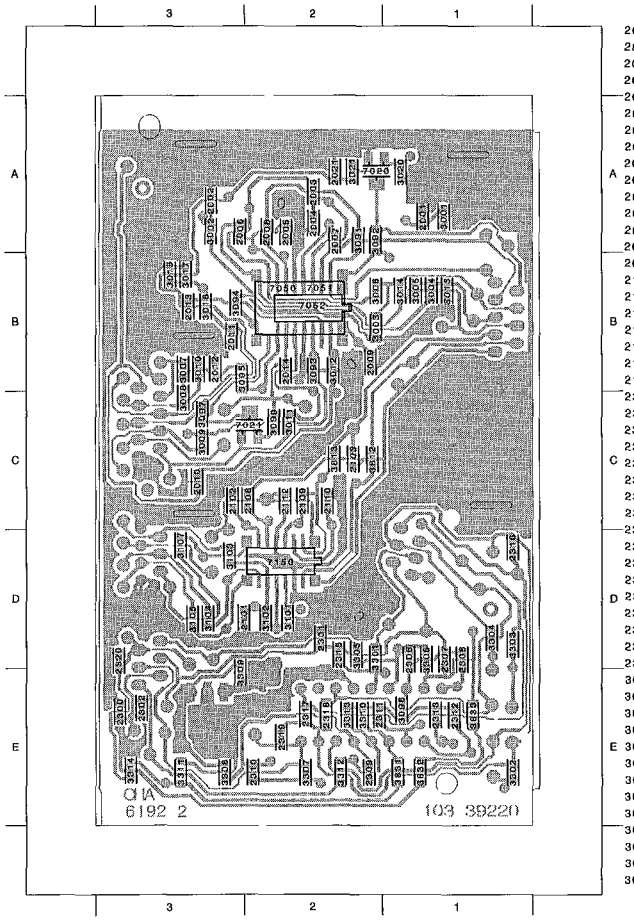

2001 A 1
2002 A 3
2003 A 2
2004 A 2
2005 A 2
2006 A 3
2007 A 2
2008 A 2
2009 B 2
2010 C 3
2011 B 3
2012 B 3
2013 B 3
2014 B 2
2021 A 2
2101 D 3
2102 C 3
2103 C 2
2108 C 2
2109 C 2
2110 C 2
2112 C 2
2300 E 3
2301 D 2
2302 E 3
2306 D 1
2307 D 1
2308 D 1
2309 E 2
2310 E 2
2311 E 2
2312 E 1
2313 E 1
2315 D 2
2316 D 1
2317 E 2
2318 E 2
2319 E 2
2320 D 3
3001 A 1
3002 A 3
3003 B 2
3004 B 1
3005 B 1
3006 B 2
3007 B 3
3008 C 3
3009 C 3
3010 B 3
3011 C 2
3012 B 2
3013 B 1
3014 B 1
3015 B 3
3016 B 3
3017 B 3
3020 A 1
3021 A 2
3091 A 2
3092 A 2
3093 B 2
3094 B 3
3095 B 3
3096 E 1
3097 C 3
3099 C 2
3101 D 2
3102 D 2
3103 D 3
3104 D 3
3105 D 3
3107 D 3
3301 D 2
3302 E 1
3303 D 1
3304 D 1
3305 D 2
3306 D 1
3307 E 2
3308 E 3
3309 E 3
3310 E 2
3311 E 3
3312 E 2
3313 E 2
3314 E 3
3812 C 2
3813 C 2
3831 E 1
3832 E 1
3833 E 1
7020 A 2
7021 C 2
7050 B 2
7051 B 2
7052 B 2
7150 D 2

WAVEFORM PHOTOGRAPHS

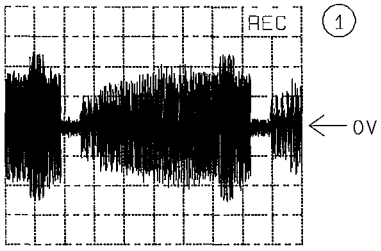

A DC, 100mV/Div, 10us/Div
Tuner 1301 Pin 17

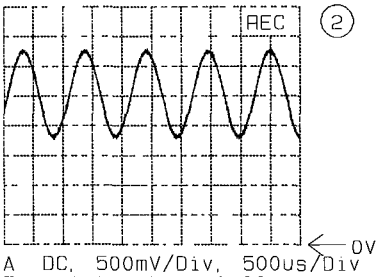

A DC, 500mV/Div, 500us/Div
Transistor 7309 Collector

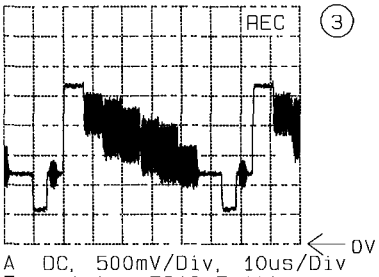

A DC, 500mV/Div, 10us/Div
Transistor 7310 Emitter

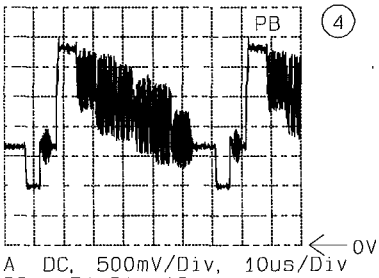

A DC, 500mV/Div, 10us/Div
IC 7051 Pin 16

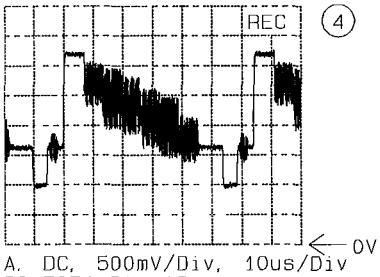

A. DC, 500mV/Div, 10us/Div
IC 7051 Pin 16

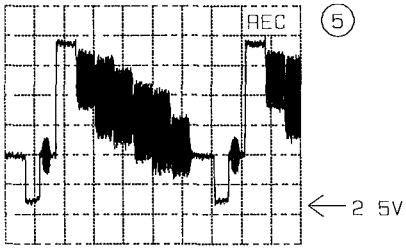

A AC, 200mV/Div, 10us/Div
IC 7051 Pin 12

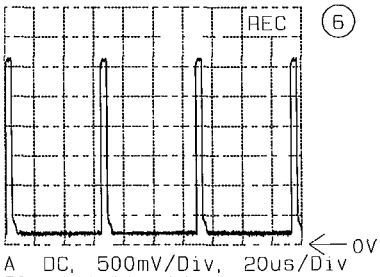

A DC, 500mV/Div, 20us/Div
IC 7051 Pin 14

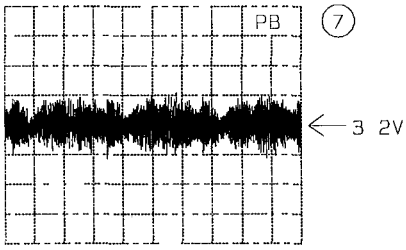

A AC, 100mV/Div, 20us/Div
IC 7051 Pin 38

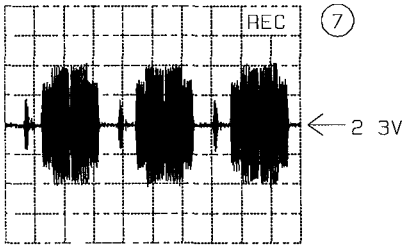

A AC, 100mV/Div, 20us/Div
IC 7051 Pin 38

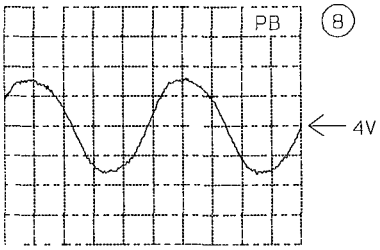

A. AC, 500mV/Div, 200us/Div
Transistor 7650 Emitter

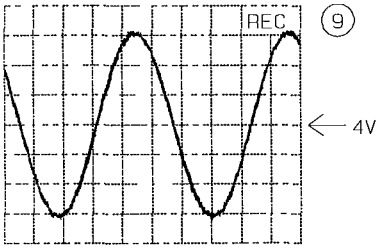

A AC, 50mV/Div, 200us/Div
IC 7601 Pin 11

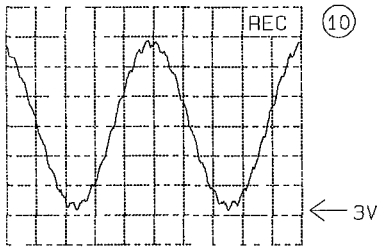

A AC, 500mV/Div, 200us/Div
IC 7601 Pin 17

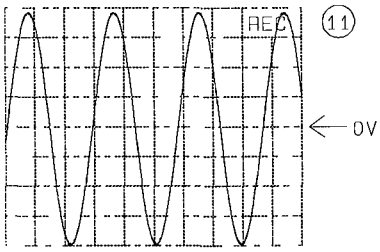

A AC, 20 V/Div, 5us/Div
Capacitor 2618

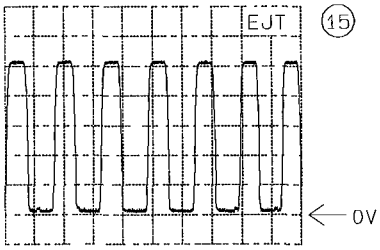

A DC, 100mV/Div, 10ms/Div
Connector 1905 Pin 11

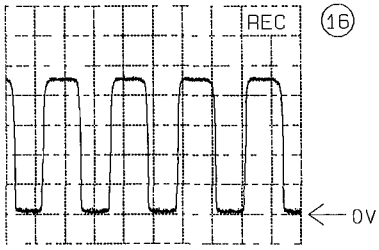

A. DC, 1 V/Div, 500ms/Div
Connector 1905 Pin 12

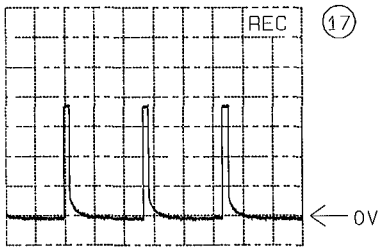

A DC, 1 V/Div, 5ms/Div
Connector 1905 Pin 13

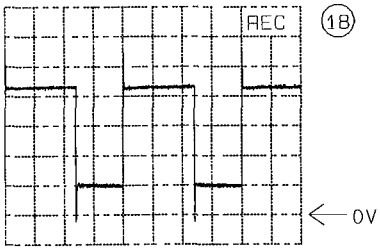

A DC, 1 V/Div, 10ms/Div
Connector 1901 Pin 7

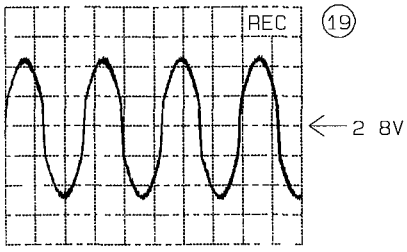

A DC, 500mV/Div, 500us/Div
Connector 1905 Pin 2

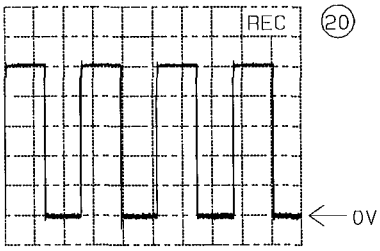

A DC, 1 V/Div, 10us/Div
IC 7410 Pin 31

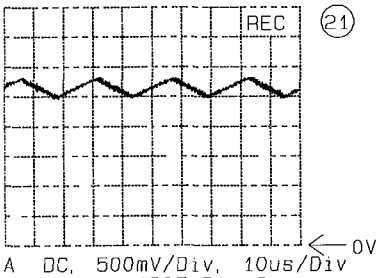

A DC, 500mV/Div, 10us/Div
Connector 1905 Pin 3

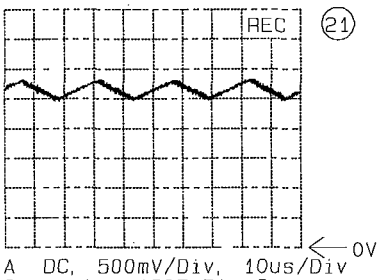

A DC, 500mV/Div, 10us/Div
Connector 1905 Pin 3

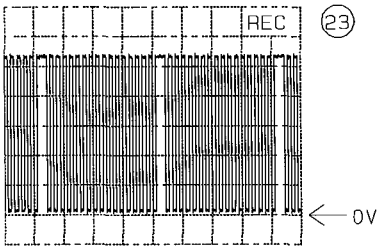

A DC, 1 V/Div, 10ms/Div
Connector 1904 Pin 1

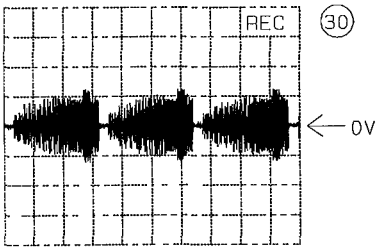

A DC, 200mV/Div, 20us/Div
Tuner 1701/1702 Pin 17

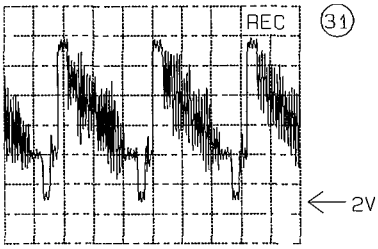

A AC, 500mV/Div, 20us/Div
IC 7200 Pin 7

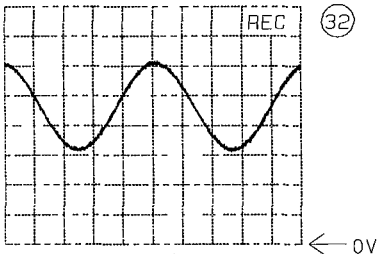

A DC, 500mV/Div, 200us/Div
IC 7200 Pin 7

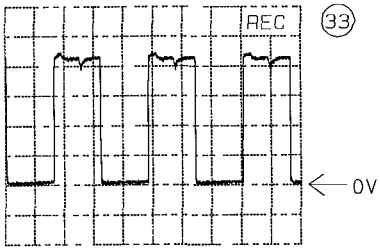

A DC, 500mV/Div, 20us/Div
IC 7200 Pin 37

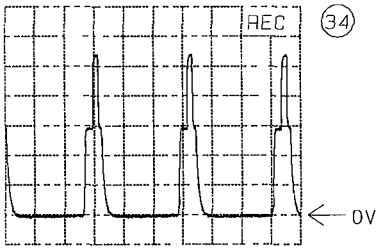

A DC, 1 V/Div, 20us/Div
IC 7200 Pin 38

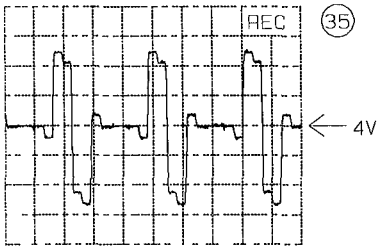

A AC, 200mV/Div, 20us/Div
IC 7200 Pin 29

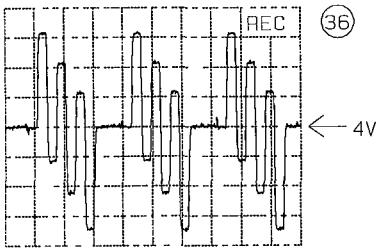

A. AC, 200mV/Div, 20us/Div
IC 7200 Pin 28

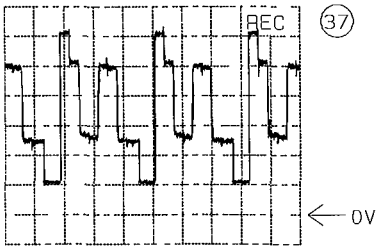

A DC, 500mV/Div, 20us/Div
IC 7200 Pin 20

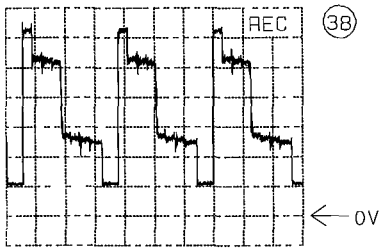

A DC, 500mV/Div, 20us/Div
IC 7200 Pin 19

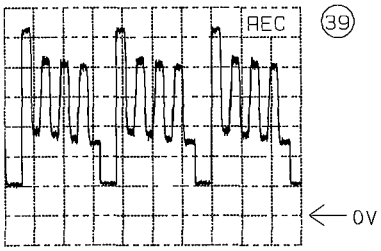

A DC, 500mV/Div, 20us/Div
IC 7200 Pin 18

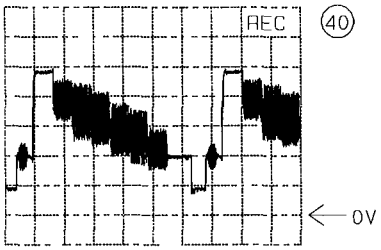

A DC, 500mV/Div, 10us/Div
Transistor 7215 Emitter

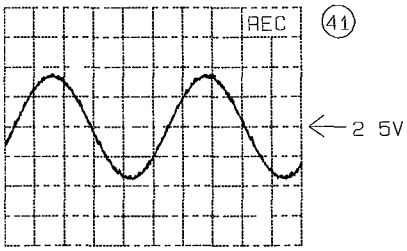

A AC, 100mV/Div, 200us/Div
IC 7240 Pin 3

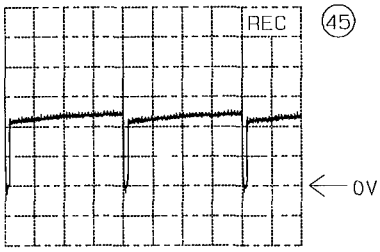

A DC, 1 V/Div, 5ms/Div
IC 7510 Pin 1

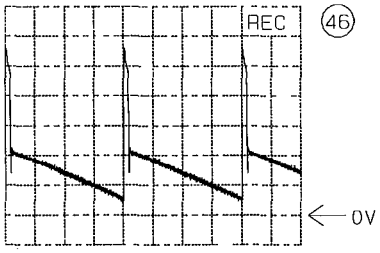

A DC, 10 V/Div, 5ms/Div
IC 7510 Pin 5

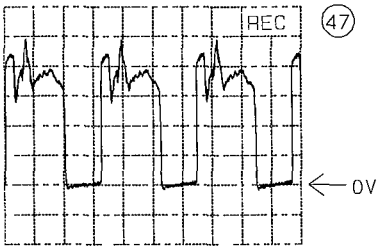

A. DC, 200mV/Div, 20us/Div
Transistor 7584 Base

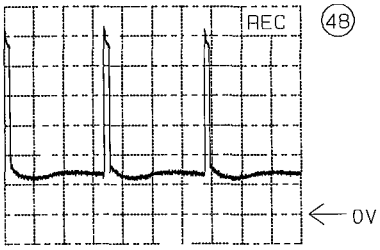

A. DC, 5 V/Div, 5ms/Div
IC 7510 Pin 8

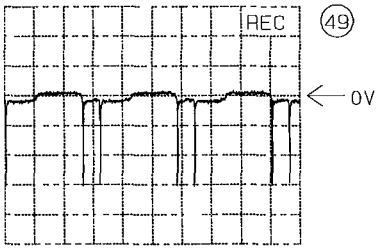

A DC, 5 V/Div, 20us/Div
Transistor 7583 Base

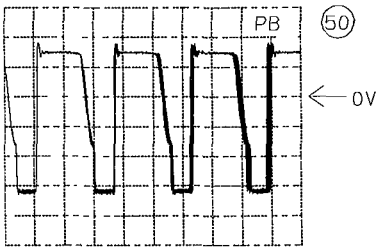

A DC, 10 V/Div, 5us/Div
Transformer 5330 Pin 4

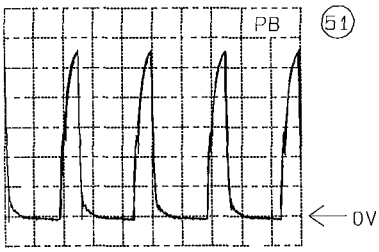

A DC, 2 V/Div, 5us/Div
Transistor 7330 Gate

V. EXPLODED VIEWS

1. DECK EXPLODED VIEW (TOP)

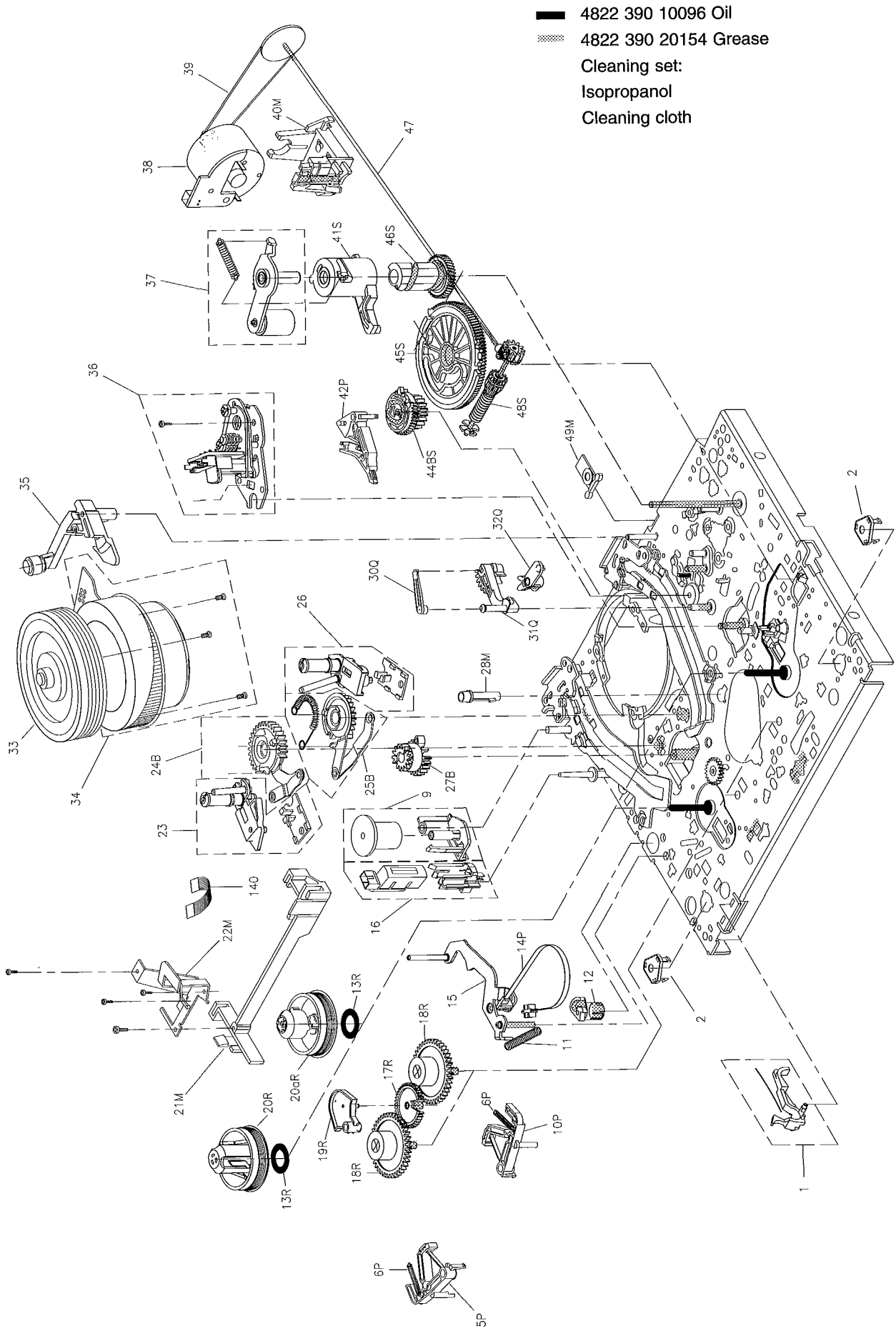

2. DECK EXPLODED VIEW (BOTTOM)

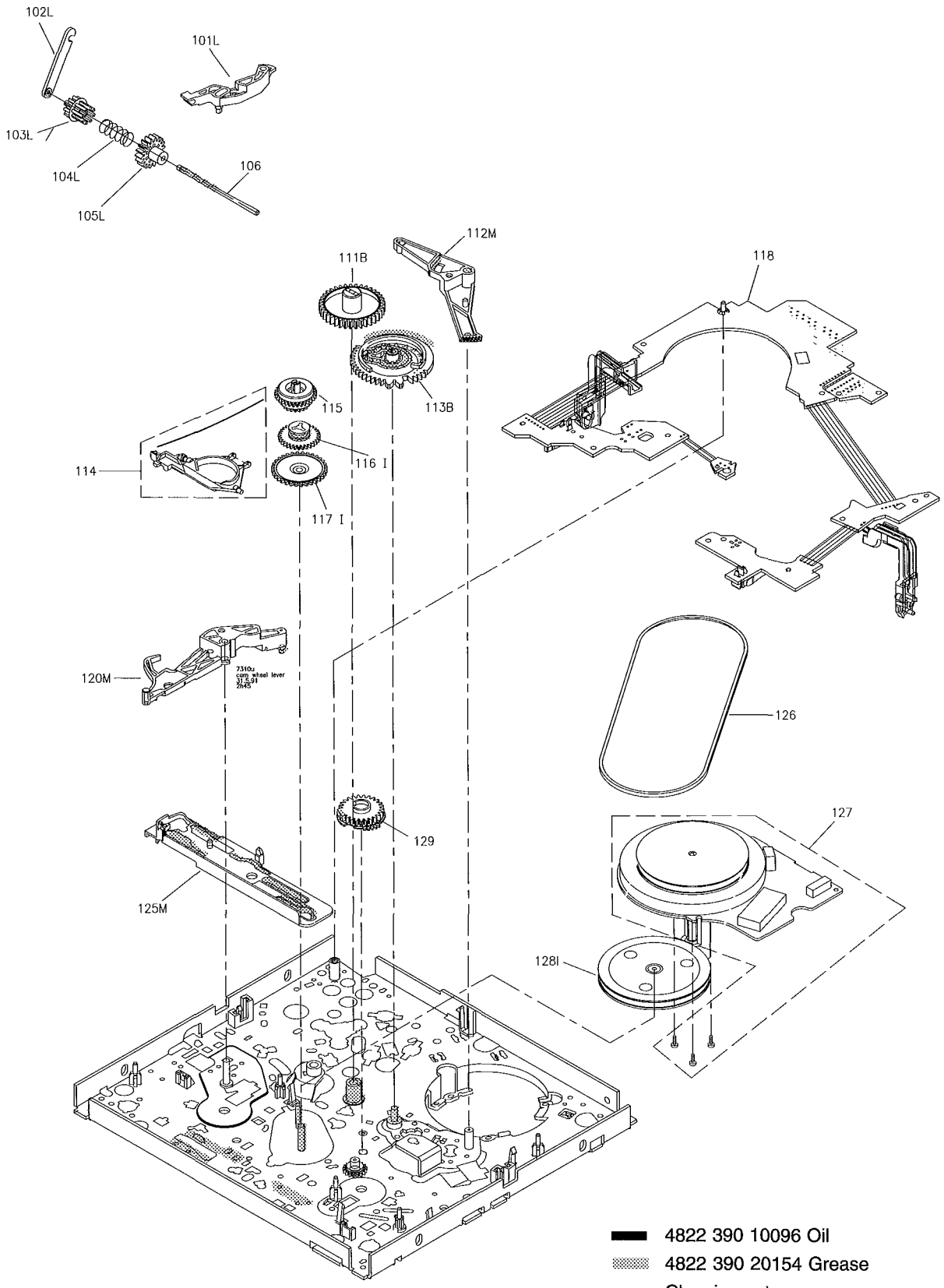

4822 390 10096 Oil
4822 390 20154 Grease
Cleaning set:
Isopropanol
Cleaning cloth

3. MECHANICAL PARTS LIST

Pos.	Description	KITS B	I	L	M	P	Q	R	S	Code number R4822
1	Rec. protection lever (with spring)									403 70546
2	Chassis mounting spring (2x)									492 71022
5	Main brake left					P				
6	Main brake spring (2x)					P				
9	Damping roller *)									528 70782
10	Main brake right					P				
11	Tension arm spring									492 33317
12	Tension crank									403 70551
13	Slip ring							R		
14	Tension band					P				
15	Tension arm									403 70547
16	Erase head									249 10522
17	Swivelling gear							R		
18	Brake gear (2x)							R		
19	Swivelling plate							R		
20	Reel table (S)							R		
20a	Reel table (T)							R		
21	Headamplifier holder				M					
22	Bracket				M					
23	Roller unit left									528 70771
24	Loading arm left	B								
25	Loading arm right	B								
26	Roller unit right									528 70772
27	Loading gear	B								
28	Light prism				M					
30	Reverse clip						Q			
31	Reverse lever						Q			
32	Intermediate lever						Q			
33	Head disc 2/0-LP									691 20965
34	Scanner motor 2/0 (with screws)									361 21548
35	Cleaning roller									528 70773
36	A/C Head (with clip and screws)									249 10468
37	Pressure roller (with spring)									528 70774
38	Loading motor									361 10809
39	Loading belt									358 20421
40	Motor holder				M					
41	Pressure roller guide								S	
42	Reverse brake					P				
44	Slider gear	B							S	
45	Cam wheel								S	
46	Cam shaft								S	
47	Pulley shaft									528 81462
48	Worm shaft								S	
49	Chassis mounting clip				M					

*) for decks: WDBT-P2/0
WDBT-P2/0LP

Pos.	Description	KITS B	I	L	M	P	Q	R	S	Code number R4822
101	Cassette loader trigger			L						
102	Clip			L						
103	Cassette loader gear1			L						
104	Cassette loader spring			L						
105	Cassette loader gear2			L						
106	Spindle									535 93277
111	Cam wheel reverse	B								
112	Tension lever				M					
113	Cam wheel tension	B								
114	Clutch lever (with spring)									403 70549
115	Clutch									528 20736
116	Changing gear		I							
117	Double gear		I							
118	Sensor print									214 60205
118	Sensor print *)									212 10601
120	Cam wheel lever				M					
125	Main slider				M					
126	Driving belt									358 31166
127	Capstan motor (with screws)									361 10805
128	Gear pulley		I							
140	Flex cable									320 40287
150	Lift									443 64112
KIT	B									310 31955
KIT	I									310 31963
KIT	L									310 32116
KIT	M									310 32188
KIT	P									310 32191
KIT	Q									310 10658
KIT	R									310 10659
KIT	S									310 10661

In order to guarantee a high repairstandard all spare parts included in a kit have to be replaced with the exception of kit M.

A fin d'obtenir un standard de réparations élevé, toutes les pièces de rechange incluses dans un kit sont à remplacer, exception faite du kit M.

Um eine hohen Reparaturstandard zu gewährleisten sind mit Ausnahme von Kit M immer alle im Kit enthaltenen Teile zu tauschen.

Para obtener un estandár de reparaciones elevado,es necesario cambiar todas las partes contenidas en el kit, la única exceptión es para el kit M

Om een hoge reparatiekwaliteit te waarbogen moeten, met uitzondering van kit M, altijd alle zich in een kit bevindende onderdelen worden vervangen.

Per una riparazione garantita ocorre sostituire tutti i pezzi contenuti nei kit, fatta eccetione per il kit M.

5-3

NOTES

5-4

CHASSIS FRAME EXPLODED VIEW

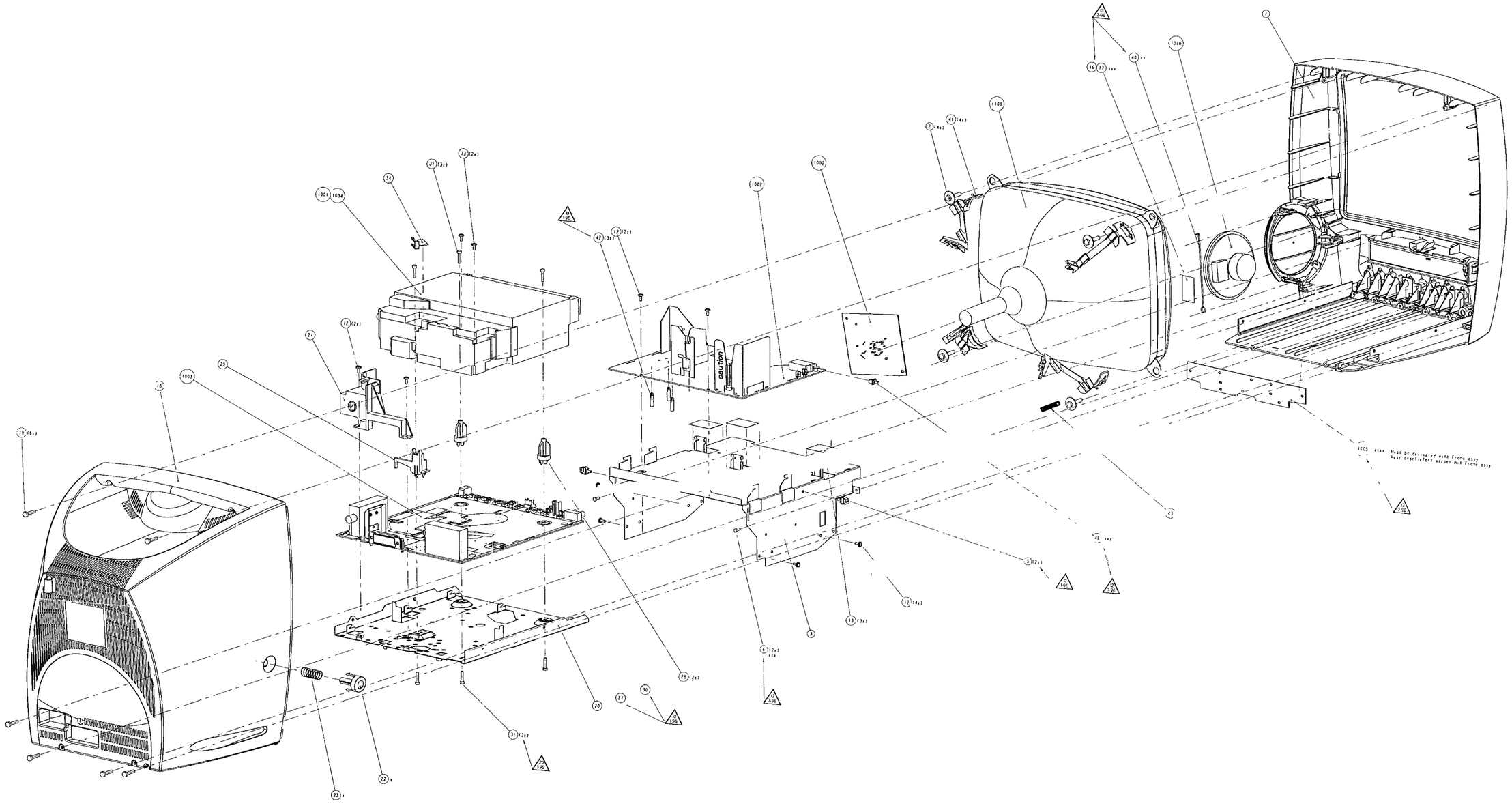

SET PARTS LIST

CABINET

1		R3103 150 91500	FRAME ASSY
1/5		R3103 150 31440	LIFT FLAP ASSY
1/6		R4822 492 70896	SPRING LIFT FLAP
1/7		R3103 110 01450	WORDMARK HITACHI
2	⚠	R4822 502 21546	SCREWS CRT
3		R4822 466 10908	SCREENING
12		R4822 502 13173	SCREWS
18		R4822 443 41461	REARCOVER
19		R4822 502 30758	SCREWS
20		R4822 464 51052	CHASSIS
21		R4822 443 64256	COVER ASSY (SCART)
22		R4822 410 63374	ON/OFF KNOB ASSY
23	⚠	R4822 492 42722	COMPRESSION SPRING
28		R4822 532 21501	WD HOLDER (FRONT)
29		R4822 532 21502	WD HOLDER (REAR)
30		R4822 532 21503	WD SUPPORT
31		R4822 502 13884	SCREW 3 5X16
33		R4822 502 21545	SCREW (AUDIO SUPPORT)
34		R4822 402 10158	SCREENING ASSY
41		R4822 402 10174	BRACKET 14"
42		R4822 535 10249	DISTANCE PART
43		R4822 492 11069	SPRING
50		R4822 442 00542	PLASTIC FUSE COVER

MISCELLANEOUS

1010		R4822 240 30716	LOUDSPEAKER 8 Ω 3W
150/03		R4822 219 10109	REMOTE CONTROL RT769/301
150/01		R4822 303 30464	LOOP ANTENNA
450		R3103 150 60170	BOX PRINTED
453		R4822 600 70776	CUSHION BOTTOM
454		R4822 600 70777	CUSHION ASSY
1002		R4822 214 12027	PCB ASSY GSPD 14
1003		R4822 214 12051	PCB ASSY KSMDM1/ILPPVX
1004		R4822 214 60335	PCB ASSY OHA 2/0 LP
1005		R3103 198 63970	PCB ASSY PCKB2

CABLES

1/7		R3103 140 25110	FFC 7F 1102-1980
8001		R4822 320 11258	FFC 7 FOLD L3-1901
8002		R4822 321 62613	CABLE ASSY 3/2F L8-1900
8003		R4822 320 50321	FFC 6F L1-F4-1904
8004		R4822 321 62626	FFC 3F L4-1903
8005		R4822 321 62627	FFC 15F L2-1905
8006		R4822 321 62628	FFC 10F 1941-1902
8007		R4822 320 11259	CABLE ASSY 2F LSP-1914
8008		R4822 320 11261	CABLE ASSY 5F 1913-1967
8011		R4822 320 11263	CABLE ASSY 7F 1912-1923
8012		R4822 320 11814	CABLE ASSY 5F 1911-1922
8013		R4822 320 11265	CABLE ASSY 13F 1909-1921
8014		R4822 320 40287	FLAT FLEX CABLE HA-SC
8016	⚠	R4822 321 11207	MAINS CORD & FUSE
		R4822 321 62609	DECK EXTENSION CABLE KIT
		R4822 320 11223	EXTENSION CABLE AUDIO/CTL

TUBE RELATED ITEMS

1100	⚠	R4822 131 11082	CRT A34JLL90X74W
5000	⚠	R4822 157 11176	DEGAUSSING COIL 14"
8000	⚠	R4822 323 10302	BRAIDED STRAP ASSY 14"

DOCUMENTATION

150/11	R3103 166 18090	DIRECTION FOR USE

NOTES

⚠ ... Safety component, use only this type

LARGE SIGNAL BOARD - PARTS LIST

CABLES, CONNECTORS & MISCELLANEOUS

0003	R4822 402 10196	EXTENSION
0009	R4822 256 30514	FUSE HOLDER
0015	R4822 255 10293	L-COOLING PLATE ASSY
0016	R4822 255 10294	Z-COOLING PLATE ASSY
0030	R4822 255 10295	U-COOLING PLATE ASSY
0050	R4822 325 10157	INSULATING
0051	R4822 492 11078	SPRING
0067	R4822 320 11309	CABLE ASSY 4F 1926-1969
1000	⚠ R4822 276 13542	MAINS SWITCH
1001	R4822 265 31326	POWER HEADER
1300	⚠ R4822 252 11215	SURGE PROTECTION
1311	⚠ R4822 070 34002	FUSE 4A
1371	⚠ R4822 071 52502	FUSE 2 5A
1921	R4822 267 50723	CONNECTOR 13 PINS
1922	R4822 267 40624	CONNECTOR 5 PINS
1923	R4822 267 50621	CONNECTOR 7 PINS
1924	R4822 265 20681	CONNECTOR 2 PINS
1925	R4822 265 31213	CONNECTOR 6 PINS
1926	R4822 265 30734	CONNECTOR 4 PINS
1961	⚠ R4822 255 70293	TUBE SOCKET 14"
1962	R4822 323 10312	CABLE ASSY AQUADAC-14"
1967	R4822 265 30351	CONNECTOR 5 PINS
1969	R4822 265 30734	CONNECTOR 4 PINS

CAPACITORS

2305	R4822 122 31175	1	nF	500V
2308	R4822 122 33302	1	nF	50V
2309	R4822 126 13614	4	nF	50V
2312	⚠ R4822 126 13841	1	nF	250V
2314	R4822 122 31175	1	nF	500V
2316	⚠ R4822 126 13986	220	nF	250V
2317	⚠ R4822 124 11898	47	µF	400V
2320	R4822 124 41576	2,2	µF	50V
2323	R4822 126 13614	4	nF	50V
2324	R4822 122 33302	1	nF	50V
2325	R5322 122 32336	560	pF	100V
2327	R4822 121 43381	470	pF	100V
2328	⚠ R4822 126 12263	220	pF	1kV
2329	R4822 126 13512	330	pF	50V
2330	R4822 126 13614	4	nF	50V
2331	R4822 121 41857	10	nF	250V
2332	R4822 122 50116	470	pF	1kV
2335	R4822 124 81188	100	µF	50V
2336	R4822 126 12263	220	pF	2kV
2337	R5322 121 42386	100	nF	63V
2338	R4822 121 70648	4,7	nF	400V
2341	R4822 122 33531	2,2	nF	50V
2351	R4822 126 11157	470	pF	500V
2352	R4822 124 11899	220	µF	25V
2353	R5322 121 42386	100	nF	63V
2363	R4822 124 11535	47	µF	200V
2364	R4822 122 50116	470	pF	1kV
2371	R4822 126 11157	470	pF	500V
2373	R4822 124 11899	220	µF	25V
2374	R4822 124 11899	220	µF	25V
2375	R4822 122 33302	1	nF	50V
2377	R4822 126 13501	1,5	nF	50V
2378	R4822 122 31175	1	nF	500V
2379	R4822 124 11901	470	µF	25V
2381	R4822 126 11157	470	pF	500V
2392	R4822 124 41579	10	µF	50V
2512	R4822 124 11541	470	µF	35V
2513	R4822 124 11539	100	µF	35V
2514	R4822 126 13512	330	pF	50V
2515	R4822 122 33531	2,2	nF	50V
2516	R5322 121 42386	100	nF	63V
2517	R4822 122 33531	2,2	nF	50V
2519	R4822 124 80039	1000	µF	25V
2520	R4822 124 41584	100	µF	10V
2551	R5322 121 42489	33	nF	250V
2552	R5322 121 42578	100	nF	250V
2553	R4822 124 41579	10	µF	50V
2555	R5322 121 42386	100	nF	63V
2574	⚠ R4822 126 14096	560	nF	250V
2575	⚠ R4822 121 70637	8,2	nF	1600V
2581	R4822 126 13512	330	pF	50V
2582	R4822 121 42408	220	nF	63V
2583	R4822 126 11157	470	pF	500V
2586	⚠ R4822 126 13435	1,2	nF	2KV
2589	⚠ R4822 121 70162	10	nF	400V
2592	R4822 124 11902	4,7	µF	200V
2593	R4822 124 11535	47	µF	200V
2594	R5322 121 42386	100	nF	63V
2901	R4822 122 31175	1	nF	500V
2902	R4822 122 32185	10	pF	50V
2903	R4822 122 32185	10	pF	50V
2904	R4822 122 32185	10	pF	50V
2905	R4822 124 41579	10	µF	50V
2906	R4822 121 41922	22	nF	250V
2907	R4822 126 13338	10	nF	2KV
2908	R4822 124 11902	4,7	µF	200V
2913	R4822 124 40246	4,7	µF	63V

RESISTORS

3300	⚠ R4822 053 21475	4,7	M	0,5W
3304	R4822 050 22701	270	R	0,6W
3310	⚠ R4822 116 10052	PTC 500R 30%		
3312	⚠ R4822 053 21395	3,9	M	0,5W
3313	⚠ R4822 053 21395	3,9	M	0,5W
3322	R4822 116 52251	18	k	0,5W
3324	R4822 116 52234	100	k	0,5W
3327	R4822 050 16802	6,8	k	0,4W
3328	R4822 050 13303	33	k	0,4W
3330	R4822 117 11728	10	k	
3331	R4822 117 12101	270	k	
3333	R4822 116 52199	68	R	0,5W
3334	R4822 117 12109	56	R	1W
3337	R4822 117 12099	2, 5	R	5W
3338	⚠ R4822 052 10399	39	R	0,33W
3339	R4822 050 11002	1	k	0,4W
3341	⚠ R4822 052 10568	5,6	R	0,33W
3342	R4822 116 83864	10	k	0,5W
3343	R4822 116 83864	10	k	0,5W
3345	R4822 117 12103	24	k	0.4W
3347	R4822 053 12101	100	R	3W
3348	R4822 116 52252	180	k	0,5W
3350	R4822 116 52264	27	k	0,5W
3351	R4822 050 12702	2,7	k	0,4W
3352	R4822 050 18201	820	R	0,4W
3353	R4822 050 11002	1	k	0,4W
3354	R4822 116 83874	220	k	0,5W
3356	R4822 050 11103	11	k	0,4W
3357	R4822 050 12003	20	k	0,4W
3358	R4822 100 11875	4,7	k	Variable resistor
3359	R4822 116 52219	330	R	0,5W
3360	R4822 116 52222	390	R	0,5W
3361	R4822 053 12399	39	R	0.5W
3362	R4822 050 12003	20	k	0,4W
3363	R4822 050 15902	5,9	k	0,4W
3364	R4822 116 52222	390	R	0,5W
3375	R4822 116 52213	180	R	0,5W
3391	R4822 050 15602	5,6	k	0,4W
3393	R4822 050 24702	4,7	k	0,6W
3394	R4822 050 11004	100	k	0,4W
3395	R4822 050 18202	8,2	k	0,4W
3513	R4822 116 52207	1,2	k	0,5W
3517	R4822 116 83883	470	R	0,5W
3518	R4822 116 52207	1,2	k	0,5W
3519	R4822 116 83972	5,1	k	0,4W
3521	R4822 116 83864	10	k	0,5W
3522	R4822 116 52186	22	R	0,5W
3523	R4822 101 11379	100	R	Variable resistor
3524	R4822 101 11381	4,7	k	Variable resistor
3525	R4822 050 24708	4,7	R	0,6W
3529	R4822 116 83864	10	k	0,5W
3530	R4822 116 52269	3,3	k	0,5W
3531	⚠ R4822 052 11278	2,7	R	0,5W
3532	⚠ R4822 052 10568	5,6	R	0,33W
3536	R4822 116 52283	4,7	k	0,5W
3537	⚠ R4822 052 10568	5,6	R	0,33W
3538	R4822 117 12163	2,7	R	1W
3551	R4822 116 83882	39	k	0,5W
3553	R4822 116 52297	68	k	0,5W
3554	R4822 116 52256	2,2	k	0,5W
3555	R4822 116 52283	4,7	k	0,5W

⚠ ... Safety component, use only this type

LARGE SIGNAL BOARD - PARTS LIST

3556	R4822 116 52222	390	R	0,5W
3558	R4822 116 52257	22	k	0,5W
3559	R4822 116 81844	2,7	R	0,5W
3577	R4822 116 52228	680	R	0,5W
3578	R4822 116 83876	270	R	0,5W
3579	R4822 116 52207	1,2	k	0,5W
3580	R4822 116 52283	4,7	k	0,5W
3581	R4822 117 12105	3,3	M	
3582	R4822 116 52291	56	k	0,5W
3584	R4822 116 52257	22	k	0,5W
3585	R4822 116 52276	3,9	k	0,5W
3586	R4822 116 52193	39	R	0,5W
3588	R4822 116 83868	150	R	0,5W
3590	R4822 053 11399	39	R	2W
3591	R4822 117 12111	4,7	k	3W
3592	⚠ R4822 052 11478	4,7	R	0,5W
3595	R4822 116 52244	15	k	0,5W
3596	R4822 053 12103	10	k	3W
3597	R4822 053 20334	330	k	0,25W
3598	R4822 053 12103	10	k	3W
3599	R4822 050 11002	1	k	0,4W
3901	R4822 116 52228	680	R	0,5W
3902	R4822 116 52289	5,6	k	0,5W
3903	R4822 116 52231	820	R	0,5W
3904	R4822 116 52289	5,6	k	0,5W
3905	R4822 116 52231	820	R	0,5W
3906	R4822 116 52231	820	R	0,5W
3907	R4822 116 52289	5,6	k	0,5W
3908	R4822 116 52303	8,2	k	0,5W
3909	R4822 116 52243	1,5	k	0,5W
3910	R4822 050 28203	82	k	0,6W
3911	R4822 050 28203	82	k	0,6W
3912	R4822 050 28203	82	k	0,6W
3913	R4822 050 21502	1,5	k	0,6W
3914	R4822 050 21502	1,5	k	0,6W
3915	R4822 050 21502	1,5	k	0,6W
3916	R4822 050 21502	1,5	k	0,6W
3917	R4822 101 11383	470	R	Variable resistor
3918	R4822 101 11383	470	R	Variable resistor
3919	R4822 100 12155	2,2	k	Variable resistor
3920	R4822 101 11383	470	R	Variable resistor
3921	R4822 100 12155	2,2	k	Variable resistor
3922	R4822 116 52292	560	k	0,5W
3925	R4822 050 21502	1,5	k	0,6W
3930	R4822 116 83864	10	k	1/6W
3931	R4822 116 52283	4,7	k	0,5W
3932	R4822 116 52283	4,7	k	0,5W
3936	R4822 116 52256	2,2	k	0,5W

COILS

5313	⚠ R4822 157 11138	MAINS FILTER
5331	⚠ R4822 146 10432	POWER TRANSFORMER
5350	R4822 526 10494	FERRITE BEAD
5351	R4822 526 10494	FERRITE BEAD
5352	R4822 157 71283	22µH 10%
5353	R4822 157 71461	22µH 10%
5354	R4822 526 10494	FERRITE BEAD
5361	R4822 157 10359	33µH
5363	R4822 526 10494	FERRITE BEAD
5364	R4822 526 10494	FERRITE BEAD
5365	R4822 526 10494	FERRITE BEAD
5370	R4822 526 10494	FERRITE BEAD
5371	R4822 157 71461	22µH 10%
5372	R4822 157 71461	22µH 10%
5373	R4822 157 71461	22µH 10%
5374	R4822 157 71283	22µH 10%
5550	⚠ R4822 140 10609	EHT TRANSFORMER
5556	R4822 526 10494	FERRITE BEAD
5580	R4822 146 21116	LINE DRIVER TRANSFO
5590	R4822 157 71519	47µH 5%
5902	R4822 158 10525	330µH

DIODES

6313	R4822 130 31603	1N4006
6314	R4822 130 31603	1N4006
6315	R4822 130 31603	1N4006
6316	R4822 130 31603	1N4006
6332	R4822 130 42606	BYD33J
6334	R4822 130 30842	BAV21
6335	R4822 130 30842	BAV21
6336	R4822 130 42488	BYD33D
6343	R4822 130 30862	BZX79-B9V1
6348	R4822 130 31983	BAT85
6351	R4822 130 83909	BYW98-200RL
6352	R4822 130 34281	BZX79-B15
6361	R4822 130 83755	BYW36
6371	R4822 130 31982	BYV27-100
6372	R4822 130 31982	BYV27-100
6374	R4822 130 42488	BYD33D
6392	R4822 130 42488	BYD33D
6393	R4822 130 83347	BZX85C6,8V
6511	R4822 130 42488	BYD33D
6513	R4822 130 30842	BAV21
6550	R4822 130 30842	BAV21
6551	R4822 130 30842	BAV21
6552	R4822 130 31024	BZX79-B18
6553	R4822 130 30842	BAV21
6554	R4822 130 34398	BZX79-B24
6556	R4822 130 30842	BAV21
6568	R4822 130 30842	BAV21
6571	R4822 130 83752	BYT54M
6581	R4822 130 30842	BAV21
6583	R4822 130 30842	BAV21
6584	R4822 130 61219	BZX79-B10
6592	R4822 130 42606	BYD33J
6906	R4822 130 30842	BAV21

TRANSISTORS & IC's

7310	R4822 209 90025	MC44603P
7330	R4822 130 63787	STP4NA60FI
7331	R4822 209 81397	TL431CLPST
7350	R4822 209 80591	LM317T
7351	R4822 130 40959	BC547B
7352	R4822 130 60838	MTP3055V
7510	R4822 209 13066	TDA3653C/N2
7550	R4822 130 40959	BC547B
7578	R4822 130 44568	BC557B
7583	R4822 130 62735	BUT12AF
7584	R4822 130 41752	MPSA43
7585	R4822 130 40959	BC547B
7587	R4822 130 40959	BC547B
7900	R4822 209 13054	TDA6103Q/N3
7901	R4822 130 40959	BC547B
7902	R4822 130 40959	BC547B

⚠ . . Safety component, use only this type

SMALL SIGNAL BOARD - PARTS LIST

MECHANICAL PARTS

0002	R4822 255 41341	LED SOCKET
0003	R4822 401 11551	LED CLAMP
0005	R4822 267 41223	IR SOCKET
0006	R4822 255 10295	U-COOLING PLATE ASSY
0007	R4822 255 41374	IR SOCKET

MISCELLANEOUS

1000	R4822 242 81067	CRYSTAL 4 433 619MHz
1001	⚠ R4822 071 55001	FUSE 500mA
1002	⚠ R4822 071 56301	FUSE 630mA
1004	⚠ R4822 071 52501	FUSE 250mA
1200	R4822 242 10321	CRYSTAL 4,433664MHz
1400	R4822 242 82059	CRYSTAL10MHz
1502	R4822 212 10617	PCB ASSY AKP
1701	R4822 210 10436	TUNER UHF U944C/IEC
1720	R4822 242 70936	SAW FILTER OFWJ1952M
1740	R4822 242 81572	CER FILTER 6MHz
1745	R4822 242 70279	CER FILTER 6MHz
1800	R4822 242 10323	CRYSTAL 27MHz
1801	R4822 242 82114	CRYSTAL 8MHz
1802	R4822 157 71289	COIL OSCILLATOR 7,4MHz
1803	R5322 242 73682	CRYSTAL 32,768kHz

CONNECTORS

1900	R4822 267 40696	CONNECTOR 3 Pins
1901	R4822 267 31512	CONNECTOR 2 Pins
1902	R4822 267 51163	CONNECTOR 10 Pins
1903	R4822 265 30989	CONNECTOR 3 Pins
1904	R4822 267 41062	CONNECTOR 6 Pins
1905	R4822 267 51281	CONNECTOR 15 Pins
1908	R4822 265 30987	CONNECTOR 7 Pins
1909	R4822 267 50723	CONNECTOR 13 Pins
1911	R4822 267 40624	CONNECTOR 5 Pins
1912	R4822 267 50621	CONNECTOR 7 Pins
1913	R4822 265 30351	CONNECTOR 5 Pins BTB-WTB
1914	R4822 267 40696	CONNECTOR 3 Pins
1915	R4822 267 60333	SCART
1916	R4822 267 31607	EARPHONES JACK

CAPACITORS

2000	R4822 126 10002	100	nF	25V
2001	R4822 122 33797	47	nF	50V
2002	R4822 122 33177	10	nF	50V
2003	R5322 122 32654	22	nF	63V
2004	R4822 124 40242	1	µF	63V
2005	R4822 124 40242	1	µF	63V
2006	R4822 126 10002	100	nF	25V
2007	R4822 124 40433	47	µF	25V
2008	R4822 122 33797	47	nF	50V
2009	R4822 124 40242	1	µF	63V
2010	R4822 122 33177	10	nF	50V
2011	R4822 122 33177	10	nF	50V
2012	R4822 122 33177	10	nF	50V
2013	R5322 122 31863	330	pF	50V
2014	R4822 122 33177	10	nF	50V
2015	R4822 124 40242	1	µF	63V
2016	R4822 124 40242	1	µF	63V
2017	R4822 124 22826	10	µF	16V
2018	R4822 124 22826	10	µF	16V
2019	R4822 126 10002	100	nF	25V
2020	R4822 124 22826	10	µF	16V
2022	R4822 124 23055	22	µF	16V
2023	R4822 124 22826	10	µF	16V
2024	R4822 126 13689	18	pF	63V
2025	R5322 122 32452	47	pF	63V
2026	R4822 126 13222	390	pF	63V
2027	R4822 124 22826	10	µF	16V
2028	R4822 122 33177	10	nF	50V
2029	R4822 124 22826	10	µF	16V
2030	R5322 122 34123	1	nF	50V
2031	R5322 122 32448	10	pF	50V
2032	R4822 126 13475	200	pF	
2033	R4822 126 13123	68	pF	63V
2034	R5322 122 32448	10	pF	50V
2035	R4822 122 32139	12	pF	63V
2036	R5322 122 32452	47	pF	63V
2037	R5322 122 32967	5,6	pF	63V
2038	R4822 122 33515	82	pF	63V
2039	R5322 122 32661	56	pF	50V
2040	R4822 122 33177	10	nF	50V
2041	R4822 126 13689	18	pF	63V
2042	R4822 126 10002	100	nF	25V
2043	R5322 122 34123	1	nF	50V
2044	R4822 122 33515	82	pF	63V
2047	R4822 126 13689	18	pF	63V
2049	R5322 122 32966	39	pF	50V
2050	R5322 122 31946	27	pF	63V
2051	R5322 122 32452	47	pF	63V
2052	R5322 122 32268	470	pF	50V
2053	R4822 126 10002	100	nF	25V
2058	R4822 124 40433	47	µF	25V
2059	R4822 124 80987	220	µF	6,3V
2060	R4822 122 33177	10	nF	50V
2062	R4822 126 13521	180	pF	63V
2064	R4822 122 33177	10	nF	50V
2065	R4822 124 40433	47	µF	25V
2066	R4822 126 10002	100	nF	25V
2067	R5322 122 34123	1	nF	50V
2068	R4822 126 10002	100	nF	25V
2200	R4822 121 41717	100	nF	100V
2201	R4822 122 33177	10	nF	50V
2202	R4822 122 33175	2,2	nF	50V
2203	R4822 124 40242	1	µF	63V
2204	R4822 122 33175	2,2	nF	50V
2205	R4822 126 10002	100	nF	25V
2206	R4822 126 13689	18	pF	63V
2208	R4822 126 10002	100	nF	25V
2209	R5322 126 10223	4,7	nF	63V
2210	R5322 122 34123	1	nF	50V
2211	R5322 122 34123	1	nF	50V
2212	R4822 126 10002	100	nF	25V
2213	R4822 126 10002	100	nF	25V
2214	R4822 122 33177	10	nF	50V
2220	R4822 126 10002	100	nF	25V
2221	R4822 126 10002	100	nF	25V
2222	R4822 126 10002	100	nF	25V
2223	R4822 121 42408	220	nF	50V
2224	R4822 124 22826	10	µF	16V
2225	R4822 126 10002	100	nF	25V
2226	R4822 122 33797	47	nF	50V
2227	R4822 126 13814	220	nF	Y5V
2228	R5322 122 32654	22	nF	63V
2229	R4822 124 40433	47	µF	25V
2240	R4822 122 32646	5,6	nF	50V
2241	R4822 126 10002	100	nF	25V
2242	R4822 124 40196	220	µF	16V
2243	R4822 126 13814	220	nF	Y5V
2244	R4822 124 40433	47	µF	25V
2246	R5322 122 32654	22	nF	63V
2248	R4822 122 33177	10	nF	50V
2249	R4822 126 10002	100	nF	25V
2250	R4822 122 33177	10	nF	50V
2251	R4822 124 41643	100	µF	16V
2252	R4822 126 10002	100	nF	25V
2253	R4822 126 10002	100	nF	25V
2254	R4822 126 10002	100	nF	25V
2255	R4822 126 10002	100	nF	25V
2256	R4822 126 13814	220	nF	Y5V
2258	R4822 126 13814	220	nF	Y5V
2261	R4822 126 10002	100	nF	25V
2262	R4822 126 10002	100	nF	25V
2263	R4822 126 10002	100	nF	25V
2400	R4822 126 10002	100	nF	25V
2401	R4822 124 40433	47	µF	25V
2403	R4822 126 10326	180	pF	63V
2404	R5322 122 32658	22	pF	50V
2405	R5322 122 32658	22	pF	50V
2415	R4822 126 10002	100	nF	25V
2427	R4822 122 33177	10	nF	50V
2430	R4822 124 11537	47	µF	25V
2431	R4822 126 10002	100	nF	25V
2432	R4822 122 33177	10	nF	50V
2433	R4822 122 33797	47	nF	50V

⚠ . . Safety component, use only this type

SMALL SIGNAL BOARD - PARTS LIST

2450	R4822 124 40433	47	µF	25V
2451	R5322 126 10223	4,7	nF	63V
2452	R4822 124 41643	100	µF	16V
2453	R4822 122 33175	2,2	nF	50V
2454	R4822 122 33342	33	nF	63V
2455	R4822 124 40433	47	µF	25V
2456	R4822 126 10002	100	nF	25V
2458	R4822 122 33177	10	nF	50V
2470	R4822 124 11537	47	µF	25V
2471	R5322 126 10223	4,7	nF	63V
2472	R4822 122 33177	10	nF	50V
2473	R4822 122 33177	10	nF	50V
2490	R5322 126 10223	4,7	nF	63V
2491	R4822 124 11537	47	µF	25V
2501	R4822 124 22826	10	µF	16V
2502	R4822 126 10002	100	nF	25V
2503	R5322 122 32268	470	pF	50V
2504	R5322 122 32268	470	pF	50V
2505	R5322 122 32268	470	pF	50V
2506	R4822 126 10002	100	nF	25V
2507	R5322 122 32654	22	nF	63V
2508	R4822 124 11569	4,7	µF	25V
2510	R4822 124 80535	10	µF	16V
2514	R4822 124 40786	2,2	µF	63V
2560	R4822 126 10002	100	nF	25V
2600	R5322 122 34123	1	nF	50V
2601	R5322 122 31865	1	nF	50V
2602	R4822 126 10002	100	nF	50V
2604	R4822 122 33177	10	nF	50V
2605	R4822 124 41643	100	µF	16V
2606	R4822 126 10002	100	nF	25V
2607	R4822 126 10002	100	nF	25V
2608	R4822 122 33175	2,2	nF	50V
2609	R4822 124 40433	47	µF	25V
2610	R4822 124 40786	2,2	µF	63V
2611	R4822 124 40786	2,2	µF	63V
2612	R4822 122 33342	33	nF	50V
2613	R4822 126 12104	12	nF	63V
2614	R4822 124 40242	1	µF	63V
2615	R4822 124 40433	47	µF	25V
2616	R4822 124 40433	47	µF	25V
2617	R4822 124 40433	47	µF	25V
2618	R5322 116 80853	560	pF	63V
2619	R4822 124 40433	47	µF	25V
2620	R4822 121 51655	47	nF	50V
2621	R5322 122 34123	1	nF	50V
2622	R4822 121 43873	27	nF	50V
2626	R4822 122 33177	10	nF	50V
2655	R4822 122 33797	47	nF	50V
2656	R4822 122 33342	33	nF	63V
2661	R4822 122 33342	33	nF	63V
2662	R4822 122 33342	33	nF	63V
2690	R4822 124 40786	2,2	µF	63V
2691	R4822 126 10002	100	nF	25V
2692	R4822 126 10002	100	nF	25V
2693	R4822 122 33514	68	pF	50V
2700	R4822 122 33177	10	nF	50V
2701	R4822 124 40433	47	µF	25V
2702	R4822 126 10002	100	nF	25V
2703	R4822 126 10002	100	nF	25V
2711	R4822 126 10002	100	nF	25V
2712	R4822 124 40786	2,2	µF	63V
2713	R4822 124 22826	10	µF	16V
2714	R4822 126 10002	100	nF	25V
2715	R4822 124 40786	2,2	µF	63V
2716	R4822 126 10002	100	nF	25V
2717	R4822 126 10002	100	nF	25V
2718	R5322 126 10465	3,9	nF	63V
2721	R4822 126 13342	100	pF	50V
2723	R5322 122 34123	1	nF	50V
2725	R4822 126 10002	100	nF	25V
2726	R4822 126 10002	100	nF	25V
2730	R4822 126 10002	100	nF	25V
2731	R4822 122 33177	10	nF	50V
2733	R4822 124 22826	10	µF	16V
2740	R4822 124 23055	22	µF	16V
2748	R4822 124 80535	10	µF	16V
2801	R4822 124 40433	47	µF	25V
2802	R4822 124 80238	220	µF	5,5V
2803	R5322 122 31946	27	pF	63V
2804	R4822 126 10002	100	nF	25V
2805	R4822 124 40786	2,2	µF	63V
2806	R4822 126 10002	100	nF	25V
2807	R5322 122 32531	100	pF	50V
2808	R4822 124 40433	47	µF	25V
2809	R4822 126 10002	100	nF	25V
2811	R4822 124 11569	4,7	µF	25V
2812	R5322 122 32658	22	pF	50V
2814	R4822 125 50412	7,5	pF	
2815	R4822 124 40433	47	µF	25V
2816	R4822 126 10002	100	nF	25V
2817	R4822 122 33177	10	nF	50V
2837	R5322 122 32531	100	pF	50V
2838	R5322 122 32531	100	pF	50V
2863	R4822 126 10002	100	nF	25V
2870	R5322 126 10223	4,7	nF	63V
2880	R4822 126 10002	100	nF	25V
2881	R4822 124 40433	47	µF	25V
2882	R4822 126 10002	100	nF	25V
2883	R5322 122 32481	15	pF	50V
2884	R5322 122 32448	10	pF	50V
2885	R5322 122 34123	1	nF	50V
2886	R4822 126 10002	100	nF	25V
2887	R4822 126 10002	100	nF	25V
2888	R4822 126 10002	100	nF	25V
2889	R4822 126 10002	100	nF	25V
2890	R4822 126 10002	100	nF	25V
2891	R4822 126 10002	100	nF	25V

RESISTORS

3000	R4822 051 10102	1	k	0,25W
3001	R4822 051 20822	8,2	k	0,1W
3002	R4822 051 20182	1,8	k	0,1W
3003	R4822 051 20682	6,8	k	0,1W
3004	R4822 051 20223	22	k	0,1W
3005	R4822 050 11002	1	k	0,4W
3009	R4822 051 20104	100	k	0,1W
3010	R4822 100 12157	10	k	
3011	R4822 050 28203	82	k	0 5W
3012	R4822 051 20183	18	k	0,1W
3013	R4822 051 20561	560	R	0,1W
3014	R4822 051 20272	2,7	k	0,1W
3015	R4822 117 11449	2,2	k	0,1W
3017	R4822 116 83903	4,7	k	0.1W
3018	R4822 117 11721	1,3	k	0 1W
3019	R4822 051 10102	1	k	0,25W
3020	R4822 116 52249	1,8	k	0,5W
3022	R4822 051 20122	1,2	k	0,1W
3023	R4822 051 20272	2,7	k	0,1W
3024	R4822 117 11139	1,5	k	0,1W
3025	R4822 051 10102	1	k	0,25W
3026	R4822 051 20472	4,7	k	0,1W
3030	R4822 116 83961	6,8	k	
3031	R4822 051 20153	15	k	0 1W
3032	R4822 051 20183	18	k	0,1W
3033	R4822 051 20331	330	R	0,1W
3034	R4822 051 20272	2,7	k	0,1W
3035	R4822 051 20681	680	R	0,1W
3036	R4822 051 20271	270	R	0,1W
3037	R4822 051 20391	390	R	0,1W
3038	R4822 051 10102	1	k	0,25W
3039	R4822 051 20272	2,7	k	0,1W
3041	R4822 051 20182	1,8	k	0,1W
3046	R4822 051 10102	1	k	0,25W
3047	R4822 117 11449	2,2	k	0,1W
3048	R4822 051 10102	1	k	0,25W
3050	R4822 051 20472	4,7	k	0,1W
3060	R4822 116 52243	1,5	k	0,5W
3062	R4822 051 20822	8,2	k	0,1W
3200	R4822 051 20101	100	R	0,1W
3201	R4822 117 12147	3,3	M	0,1W
3202	R4822 116 52252	180	k	0,5W
3203	R4822 051 20225	2,2	M	0,1W
3204	R4822 051 20008	CHIP JUMPER		
3206	R4822 100 12198	10	k	TRIMMER
3207	R4822 116 52285	470	k	0,5W
3208	R4822 051 20223	22	k	0,1W
3209	R4822 051 20681	680	R	0,1W
3210	R4822 051 20822	8,2	k	0,1W
3211	R4822 051 20822	8,2	k	0,1W

⚠ .. Safety component, use only this type

SMALL SIGNAL BOARD - PARTS LIST

3212	R4822 051 20104	100	k	0,1W
3213	R4822 051 10102	1	k	0,25W
3214	R4822 116 52276	3,9	k	0,5W
3215	R4822 051 20008	CHIP JUMPER		
3216	R4822 117 10833	10	k	0,1W
3220	R4822 050 11002	1	k	0,4W
3221	R4822 051 20562	5,6	k	0,1W
3222	R4822 051 20272	2,7	k	0 1W
3223	R4822 117 10353	150	R	0,1W
3224	R4822 051 20225	2,2	M	0,1W
3225	R4822 117 11449	2,2	k	0,1W
3226	R4822 117 11449	2,2	k	0,1W
3228	R4822 051 20471	470	R	0,1W
3229	R4822 051 10102	1	k	0,25W
3230	R4822 051 20472	4,7	k	0,1W
3232	R4822 117 11139	1,5	k	0,1W
3233	R4822 117 11139	1,5	k	0,1W
3234	R4822 117 11139	1,5	k	0,1W
3235	R4822 116 52303	8,2	k	0,5W
3236	R4822 116 52238	12	k	0,5W
3237	R4822 116 52238	12	k	0,5W
3238	R4822 051 20332	3,3	k	0,1W
3239	R4822 051 20332	3,3	k	0,1W
3240	R4822 051 20472	4,7	k	0,1W
3241	R4822 051 20472	4,7	k	0,1W
3242	R4822 051 20272	2,7	k	0,1W
3244	R4822 116 52195	47	R	0,5W
3245	R4822 051 20472	4,7	k	0,1W
3247	R4822 117 10833	10	k	0,1W
3249	R4822 116 52195	47	R	0,5W
3250	R4822 116 52175	100	R	0,5W
3251	R4822 117 10833	10	k	0,1W
3252	R4822 051 10102	1	k	0,25W
3253	R4822 051 10102	1	k	0,25W
3254	R4822 051 20332	3,3	k	0,1W
3255	R4822 051 20223	22	k	0,1W
3256	R4822 051 20333	33	k	0,1W
3257	R4822 117 10833	10	k	0,1W
3258	R4822 051 20563	56	k	0,1W
3261	R4822 051 10102	1	k	0,25W
3262	R4822 051 10102	1	k	0,25W
3263	R4822 051 10102	1	k	0,25W
3264	R4822 051 10102	1	k	0,25W
3265	R4822 117 11449	2,2	k	0,1W
3266	R4822 051 10102	1	k	0,25W
3267	R4822 051 20472	4,7	k	0,1W
3400	R4822 051 20472	4,7	k	0,1W
3401	R4822 117 10833	10	k	0,1W
3402	R4822 051 10102	1	k	0,25W
3403	R4822 116 52283	4,7	k	0,5W
3404	R4822 051 10102	1	k	0,25W
3405	R4822 051 10102	1	k	0,25W
3406	R4822 051 10102	1	k	0.1W
3407	R4822 117 10833	10	k	0,1W
3408	R4822 050 11002	1	k	0,4W
3417	R4822 117 10833	10	k	0,1W
3418	R4822 116 52234	100	k	0,5W
3419	R4822 117 10833	10	k	0,1W
3420	R4822 116 52234	100	k	0,5W
3421	R4822 051 20472	4,7	k	0,1W
3422	R4822 117 11383	12	k	0,1W
3423	R4822 116 52271	33	k	0,5W
3424	R4822 051 20822	8,2	k	0,1W
3425	R4822 116 83961	6,8	k	
3426	R4822 117 10833	10	k	0,1W
3427	R4822 050 11002	1	k	0,4W
3428	R4822 051 10102	1	k	0,25W
3429	R4822 051 20101	100	R	0,1W
3430	R4822 051 20008	CHIP JUMPER		
3431	R4822 051 20472	4,7	k	0,1W
3432	R4822 117 10833	10	k	0,1W
3433	R4822 050 11002	1	k	0,4W
3435	R4822 050 11002	1	k	0,4W
3437	R4822 051 10102	1	k	0,25W
3438	R4822 116 83864	10	k	0,5W
3439	R4822 117 10833	10	k	0,1W
3440	R4822 050 11002	1	k	0,4W
3441	R4822 116 52283	4,7	k	0,5W
3442	R4822 051 20122	1,2	k	0,1W
3443	R4822 051 20472	4,7	k	0,1W
3444	R4822 117 10833	10	k	0,1W
3445	R4822 117 10833	10	k	0,1W
3446	R4822 117 11449	2,2	k	0,1W
3447	R4822 116 52257	22	k	0,5W
3448	R4822 116 83864	10	k	0,5W
3449	R4822 051 20223	22	k	0,1W
3450	R4822 051 20223	22	k	0,1W
3451	R4822 051 20392	3,9	k	0,1W
3452	R4822 052 10228	2,2	R	0,33W
3453	R4822 051 20158	1,5	R	0,1W
3454	R4822 117 11149	82	k	0,1W
3455	R4822 051 20182	1,8	k	0,1W
3456	R4822 117 10833	10	k	0,1W
3457	R4822 051 10102	1	k	0,25W
3458	R4822 051 20472	4,7	k	0,1W
3459	R4822 117 11383	12	k	0,1W
3460	R4822 051 10102	1	k	0,25W
3461	R4822 116 52283	4,7	k	0,5W
3462	R4822 116 52199	68	R	0,5W
3463	R4822 116 52199	68	R	0,5W
3464	R4822 051 20221	220	R	0,1W
3470	R4822 050 11002	1	k	0,4W
3471	R4822 117 10833	10	k	0,1W
3472	R4822 051 20223	22	k	0,1W
3473	R4822 050 11002	1	k	0,4W
3475	R4822 117 11449	2,2	k	0,1W
3476	R4822 051 20223	22	k	0,1W
3477	R4822 051 20122	1,2	k	0,1W
3479	R4822 116 52283	4,7	k	0,5W
3480	R4822 051 20471	470	R	0,1W
3481	R4822 051 20221	220	R	0,1W
3482	R4822 051 20472	4,7	k	0,1W
3483	R4822 051 20393	39	k	0,1W
3484	R4822 117 10833	10	k	0,1W
3487	R4822 051 20225	2,2	M	0,1W
3488	R4822 051 20104	100	k	0,1W
3489	R4822 051 20104	100	k	0,1W
3490	R4822 051 20472	4,7	k	0,1W
3491	R4822 051 20472	4,7	k	0,1W
3492	R4822 051 20472	4,7	k	0,1W
3493	R4822 051 10102	1	k	0,25W
3494	R4822 116 52228	680	R	0,5W
3495	R4822 116 52228	680	R	0,5W
3496	R4822 117 10833	10	k	0.1W
3500	R4822 051 20471	470	R	0,1W
3501	R4822 051 20104	100	k	0,1W
3502	R4822 051 20154	150	k	0,1W
3503	R4822 051 20104	100	k	0,1W
3504	R4822 051 20822	8,2	k	0,1W
3505	R4822 051 20822	8,2	k	0,1W
3506	R4822 051 20759	75	R	0,1W
3507	R4822 051 20759	75	R	0,1W
3508	R4822 051 20759	75	R	0,1W
3509	R4822 051 20759	75	R	0,1W
3510	R4822 051 20759	75	R	0,1W
3511	R4822 051 20682	6,8	k	0,1W
3512	R4822 051 20472	4,7	k	0,1W
3513	R4822 051 20122	1,2	k	0,1W
3514	R4822 051 20471	470	R	0,1W
3516	R4822 051 20821	820	R	0,1W
3517	R4822 116 83864	10	k	0,5W
3518	R4822 051 20221	220	R	0 1W
3519	R4822 051 20221	220	R	0.1W
3521	R4822 051 20182	1,8	k	0,1W
3522	R4822 117 11139	1,5	k	0,1W
3525	R4822 051 20391	390	R	0,1W
3526	R4822 116 83864	10	k	0,5W
3530	R4822 051 20229	22	R	0,1W
3531	R4822 051 20393	39	k	0,1W
3532	R4822 117 11383	12	k	0,1W
3533	R4822 117 10353	150	R	0,1W
3534	R4822 117 10353	150	R	0,1W
3535	R4822 117 11449	2,2	k	0,1W
3536	R4822 051 20682	6,8	k	0.1W
3539	R4822 116 52269	3,3	k	0,5W
3540	R4822 051 20104	100	k	0,1W
3541	R4822 051 20104	100	k	0,1W
3542	R4822 051 20104	100	k	0,1W
3543	R4822 051 20473	47	k	0,1W
3544	R4822 051 20473	47	k	0,1W
3560	R4822 051 20271	270	R	0,1W
3600	R4822 051 20479	47	R	0,1W

⚠ .. Safety component, use only this type

SMALL SIGNAL BOARD - PARTS LIST

3601	R4822 051 20104	100	k	0,1W
3602	R4822 051 20331	330	R	0.1W
3603	R4822 117 11383	12	k	0,1W
3604	R4822 051 20394	390	k	0,1W
3605	R4822 051 20101	100	R	0,1W
3607	R4822 051 20105	1	M	0,1W
3608	R4822 051 20471	470	R	0,1W
3610	R4822 117 10833	10	k	0,1W
3611	R4822 051 20333	33	k	0,1W
3612	R4822 117 11383	12	k	0,1W
3613	R4822 117 11449	2,2	k	0,1W
3614	R4822 117 10833	10	k	0,1W
3615	R4822 051 20391	390	R	0.1W
3616	R4822 051 20221	220	R	0,1W
3617	R4822 116 52257	22	k	0,5W
3618	R4822 100 12159	100	k	
3619	R4822 051 20158	1,5	R	0,1W
3620	R4822 051 20473	47	k	0,1W
3621	R4822 117 10833	10	k	0,1W
3622	R4822 051 20109	10	R	0,1W
3623	R4822 117 10833	10	k	0,1W
3624	R4822 051 20332	3,3	k	0,1W
3625	R4822 051 20339	33	R	0,1W
3655	R4822 051 20471	470	R	0,1W
3656	R4822 051 20332	3,3	k	0,1W
3657	R4822 051 20472	4,7	k	0.1W
3658	R4822 117 11449	2,2	k	0,1W
3659	R4822 051 20104	100	k	0,1W
3660	R4822 051 20392	3,9	k	0.1W
3680	R4822 050 24708	4,7	R	0,6W
3681	R4822 050 24708	4,7	R	0,6W
3682	R4822 050 24708	4,7	R	0,6W
3690	R4822 116 52176	10	R	0,5W
3691	R4822 051 20221	220	R	0 1W
3692	R4822 051 20561	560	R	0,1W
3693	R4822 116 52176	10	R	0,5W
3694	R4822 116 52207	1,2	k	0,5W
3695	R4822 051 20101	100	R	0,1W
3696	R4822 051 20101	100	R	0,1W
3697	R4822 051 20391	390	R	0,1W
3698	R4822 051 20272	2,7	k	0,1W
3700	R4822 117 11383	12	k	0,1W
3701	R4822 117 11383	12	k	0 1W
3702	R4822 051 20333	33	k	0.1W
3703	R4822 116 52175	100	R	0,5W
3704	R4822 116 52175	100	R	0,5W
3705	R4822 051 20223	22	k	0,1W
3707	R4822 051 20182	1,8	k	0,1W
3710	R4822 117 11139	1,5	k	0,1W
3711	R4822 051 20562	5,6	k	0,1W
3712	R4822 100 12157	10	k	TRIMMER
3713	R4822 051 20393	39	k	0,1W
3714	R4822 051 20153	15	k	0,1W
3715	R4822 051 20273	27	k	0,1W
3716	R4822 051 20471	470	R	0,1W
3718	R4822 051 20271	270	R	0.1W
3721	R4822 051 20471	470	R	0,1W
3725	R4822 051 10102	1	k	0,25W
3727	R4822 051 20104	100	k	0,1W
3733	R4822 051 20682	6,8	k	0,1W
3735	R4822 117 10353	150	R	0,1W
3736	R4822 051 20271	270	R	0,1W
3737	R4822 051 20474	470	k	0,1W
3738	R4822 051 10102	1	k	0,25W
3740	R4822 116 83876	270	R	0,5W
3747	R4822 051 20271	270	R	0,1W
3750	R4822 051 10102	1	k	0,25W
3751	R4822 051 20104	100	k	0,1W
3752	R4822 051 20104	100	k	0,1W
3753	R4822 117 10833	10	k	0,1W
3754	R4822 117 10833	10	k	0,1W
3755	R4822 051 20563	56	k	0,1W
3756	R4822 051 20153	15	k	0,1W
3757	R4822 051 20473	47	k	0,1W
3799	R4822 051 20008	CHIP JUMPER		
3800	R4822 051 20393	39	k	0,1W
3801	R4822 117 10833	10	k	0,1W
3802	R4822 051 20104	100	k	0,1W
3803	R4822 051 20104	100	k	0,1W
3804	R4822 051 20104	100	k	0,1W
3805	R4822 051 20104	100	k	0,1W
3806	R4822 051 20473	47	k	0,1W
3807	R4822 051 20182	1,8	k	0,1W
3808	R4822 051 20154	150	k	0,1W
3809	R4822 117 10833	10	k	0,1W
3810	R4822 117 10833	10	k	0,1W
3811	R4822 116 52234	100	k	0,5W
3813	R4822 051 20472	4,7	k	0,1W
3814	R4822 051 20101	100	R	0,1W
3817	R4822 117 10833	10	k	0,1W
3818	R4822 051 20333	33	k	0,1W
3819	R4822 117 10833	10	k	0,1W
3820	R4822 051 20101	100	R	0,1W
3823	R4822 116 83864	10	k	0,5W
3825	R4822 116 83864	10	k	0,5W
3829	R4822 116 83864	10	k	0,5W
3830	R4822 116 52283	4,7	k	0,5W
3833	R4822 051 20332	3,3	k	0,1W
3834	R4822 051 20332	3,3	k	0,1W
3835	R4822 116 83872	220	R	0,5W
3836	R4822 117 10833	10	k	0,1W
3837	R4822 051 20472	4,7	k	0,1W
3838	R4822 116 83864	10	k	0,5W
3839	R4822 117 11139	1,5	k	0,1W
3854	R4822 051 20101	100	R	0,1W
3855	R4822 051 20331	330	R	
3857	R4822 051 20682	6,8	k	0,1W
3858	R4822 051 20008	CHIP JUMPER		
3859	R4822 051 20682	6,8	k	0,1W
3862	R4822 051 20821	820	R	
3863	R4822 051 20101	100	R	0,1W
3864	R4822 051 20101	100	R	0,1W
3865	R4822 117 10833	10	k	0,1W
3866	R4822 117 10833	10	k	0,1W
3867	R4822 117 10833	10	k	0,1W
3868	R4822 116 83872	220	R	
3869	R4822 116 83872	220	R	
3870	R4822 117 11449	2,2	k	0,1W
3871	R4822 117 11449	2,2	k	0,1W
3872	R4822 051 20153	15	k	0,1W
3873	R4822 051 10102	1	k	0,25W
3874	R4822 117 11139	1,5	k	0,1W
3875	R4822 051 10102	1	k	0,25W
3876	R4822 117 10833	10	k	0,1W
3877	R4822 117 10833	10	k	0,1W
3878	R4822 116 52175	100	R	
3879	R4822 116 52175	100	R	
3880	R4822 051 20332	3,3	k	0,1W
3881	R4822 051 20273	27	k	0,1W
3882	R4822 117 10833	10	k	0,1W
3883	R4822 051 20562	5,6	k	0,1W
3884	R4822 051 20101	100	R	0.1W
3885	R4822 051 20101	100	R	0.1W
3886	R4822 051 10102	1	k	0,25W
3889	R4822 051 10102	1	k	0,25W
3890	R4822 051 20101	100	R	0,1W
3892	R4822 117 10833	10	k	0,1W
3893	R4822 117 10833	10	k	0,1W
3894	R4822 117 10833	10	k	0,1W

CHIP JUMPER

4001	R4822 051 20008	CHIP JUMPER
4002	R4822 051 10008	CHIP JUMPER
4003	R4822 051 10008	CHIP JUMPER
4005	R4822 051 10008	CHIP JUMPER
4006	R4822 051 10008	CHIP JUMPER
4007	R4822 051 10008	CHIP JUMPER
4008	R4822 051 10008	CHIP JUMPER
4009	R4822 051 10008	CHIP JUMPER
4011	R4822 051 20008	CHIP JUMPER
4014	R4822 051 20008	CHIP JUMPER
4015	R4822 051 10008	CHIP JUMPER
4019	R4822 051 10008	CHIP JUMPER
4021	R4822 051 20008	CHIP JUMPER
4022	R4822 051 10008	CHIP JUMPER
4023	R4822 051 10008	CHIP JUMPER
4027	R4822 051 10008	CHIP JUMPER
4028	R4822 051 10008	CHIP JUMPER
4029	R4822 051 10008	CHIP JUMPER
4045	R4822 051 10008	CHIP JUMPER

⚠ ... Safety component, use only this type

SMALL SIGNAL BOARD - PARTS LIST

4046	R4822 051 10008	CHIP JUMPER
4047	R4822 051 10008	CHIP JUMPER
4048	R4822 051 10008	CHIP JUMPER
4051	R4822 051 20008	CHIP JUMPER
4052	R4822 051 20008	CHIP JUMPER
4053	R4822 051 20008	CHIP JUMPER
4054	R4822 051 20008	CHIP JUMPER
4055	R4822 051 20008	CHIP JUMPER
4057	R4822 051 20008	CHIP JUMPER
4058	R4822 051 10008	CHIP JUMPER
4059	R4822 051 10008	CHIP JUMPER
4060	R4822 051 10008	CHIP JUMPER
4061	R4822 051 10008	CHIP JUMPER
4062	R4822 051 20008	CHIP JUMPER
4063	R4822 051 10008	CHIP JUMPER
4064	R4822 051 20008	CHIP JUMPER
4065	R4822 051 10008	CHIP JUMPER
4066	R4822 051 10008	CHIP JUMPER
4067	R4822 051 10008	CHIP JUMPER
4069	R4822 051 10008	CHIP JUMPER
4070	R4822 051 10008	CHIP JUMPER
4071	R4822 051 20008	CHIP JUMPER
4073	R4822 051 20008	CHIP JUMPER
4074	R4822 051 10008	CHIP JUMPER
4076	R4822 051 10008	CHIP JUMPER
4077	R4822 051 20008	CHIP JUMPER
4079	R4822 051 10008	CHIP JUMPER
4080	R4822 051 10008	CHIP JUMPER
4084	R4822 051 20154	150 k 5% 0,1W
4085	R4822 051 20008	CHIP JUMPER
4087	R4822 051 10008	CHIP JUMPER
4090	R4822 051 10008	CHIP JUMPER
4091	R4822 051 10008	CHIP JUMPER
4092	R4822 051 10008	CHIP JUMPER
4093	R4822 051 10008	CHIP JUMPER
4095	R4822 051 10008	CHIP JUMPER
4098	R4822 051 10008	CHIP JUMPER
4100	R4822 051 10008	CHIP JUMPER
4101	R4822 051 20008	CHIP JUMPER
4102	R4822 051 10008	CHIP JUMPER
4103	R4822 051 20008	CHIP JUMPER
4104	R4822 051 10008	CHIP JUMPER
4107	R4822 051 10008	CHIP JUMPER
4108	R4822 051 10008	CHIP JUMPER
4109	R4822 051 10008	CHIP JUMPER
4111	R4822 051 10008	CHIP JUMPER
4113	R4822 051 10008	CHIP JUMPER
4115	R4822 051 10008	CHIP JUMPER
4118	R4822 051 20008	CHIP JUMPER
4119	R4822 051 20008	CHIP JUMPER
4120	R4822 051 10008	CHIP JUMPER
4121	R4822 051 20008	CHIP JUMPER
4122	R4822 051 10008	CHIP JUMPER
4123	R4822 051 10008	CHIP JUMPER
4124	R4822 051 20008	CHIP JUMPER
4125	R4822 051 10008	CHIP JUMPER
4126	R4822 051 10008	CHIP JUMPER
4127	R4822 051 20008	CHIP JUMPER
4130	R4822 051 10008	CHIP JUMPER
4131	R4822 051 10008	CHIP JUMPER
4133	R4822 051 10008	CHIP JUMPER
4134	R4822 051 20008	CHIP JUMPER
4136	R4822 051 10008	CHIP JUMPER
4140	R4822 051 20008	CHIP JUMPER
4180	R4822 051 10008	CHIP JUMPER
4181	R4822 051 10008	CHIP JUMPER
4201	R4822 051 20008	CHIP JUMPER
4203	R4822 051 10008	CHIP JUMPER
4204	R4822 051 10008	CHIP JUMPER
4205	R4822 051 10008	CHIP JUMPER
4206	R4822 051 10008	CHIP JUMPER
4207	R4822 051 10008	CHIP JUMPER
4208	R4822 051 10008	CHIP JUMPER
4209	R4822 051 10008	CHIP JUMPER
4210	R4822 051 20008	CHIP JUMPER
4211	R4822 051 20008	CHIP JUMPER
4212	R4822 051 10008	CHIP JUMPER
4213	R4822 051 10008	CHIP JUMPER
4221	R4822 051 10008	CHIP JUMPER
4222	R4822 051 10008	CHIP JUMPER
4224	R4822 051 10008	CHIP JUMPER
4225	R4822 051 10008	CHIP JUMPER
4227	R4822 051 10008	CHIP JUMPER
4228	R4822 051 20008	CHIP JUMPER
4229	R4822 051 10008	CHIP JUMPER
4231	R4822 051 10008	CHIP JUMPER
4700	R4822 051 20008	CHIP JUMPER
4801	R4822 051 20008	CHIP JUMPER
4810	R4822 051 10008	CHIP JUMPER
4811	R4822 051 10008	CHIP JUMPER
4812	R4822 051 10008	CHIP JUMPER
4813	R4822 051 10008	CHIP JUMPER

COILS

5000	R4822 157 50961	22 µH
5001	R4822 157 10972	15 µH 5%
5002	R4822 157 11139	6,8 µH 5%
5003	R4822 157 53265	100 µH
5004	R4822 157 11139	6,8 µH 5%
5005	R4822 157 11141	27 µH 5%
5006	R4822 157 11142	47 µH 5%
5007	R4822 157 11143	120 µH 5%
5008	R4822 157 11144	5,6 µH 5%
5009	R4822 157 11145	150 µH 5%
5010	R4822 157 11142	47 µH 5%
5011	R4822 157 11146	270 µH 5%
5012	R4822 157 11147	220 µH 5%
5015	R4822 157 52286	22 µH
5200	R4822 157 52286	22 µH
5201	R4822 157 52285	6,8 µH
5202	R4822 157 52285	6,8 µH
5203	R4822 157 52285	6,8 µH
5401	R4822 157 52285	6,8 µH
5402	R4822 157 53005	0.33 µH
5602	R4822 157 63675	330 µH
5603	R4822 157 53531	ERASE & BIAS OSCILLATOR
5700	R4822 157 52285	6,8 µH
5701	R4822 157 62681	1 µH 5%
5705	R4822 157 71288	0,47 µH
5706	R4822 157 52842	15 µH
5801	R4822 157 52285	6,8 µH
5880	R4822 157 71184	10 µH 10%
5881	R4822 157 70503	4,7 µH

DIODES

6000	R4822 130 30621	1N4148
6200	R4822 130 30621	1N4148
6206	R5322 130 34331	BAV70
6208	R4822 130 30621	1N4148
6209	R4822 130 83757	BAS216
6210	R4822 130 10654	BAT254
6242	R4822 130 31024	BZX79-B18
6261	R4822 130 31983	BAT85
6262	R4822 130 31983	BAT85
6263	R4822 130 31983	BAT85
6500	R4822 130 34197	BZX79-B12
6503	R4822 130 34197	BZX79-B12
6504	R4822 130 34197	BZX79-B12
6505	R4822 130 34197	BZX79-B12
6506	R4822 130 34197	BZX79-B12
6507	R4822 130 34197	BZX79-B12
6508	R4822 130 34197	BZX79-B12
6509	R4822 130 34197	BZX79-B12
6510	R4822 130 34379	BZX79-B27
6512	R4822 130 30621	1N4148
6513	R4822 130 30621	1N4148
6514	R4822 130 30621	1N4148
6515	R4822 130 30621	1N4148
6690	R4822 130 34173	BZX79-B5V6
6691	R4822 130 34173	BZX79-B5V6
6693	R4822 130 34173	BZX79-B5V6
6694	R4822 130 30621	1N4148
6801	R4822 130 31983	BAT85
6802	R4822 130 31983	BAT85
6804	R4822 130 30621	1N4148
6805	R4822 130 30621	1N4148
6830	R4822 130 30621	1N4148
6863	R4822 130 83358	LED RED TLHR4605
6868	R4822 130 83092	LED RED TLHR4205
6869	R4822 130 83092	LED RED TLHR4205

⚠ Safety component, use only this type

SMALL SIGNAL BOARD - PARTS LIST

TRANSISTORS & IC's

7000	R5322 130 60508	BC857B
7001	R4822 130 10796	MUN2212
7003	R4822 130 10797	MUN2112
7005	R4822 130 10797	MUN2112
7006	R4822 130 44568	BC557B
7007	R4822 130 60511	BC847B
7009	R4822 130 10796	MUN2212
7013	R4822 130 60511	BC847B
7015	R4822 130 10797	MUN2112
7016	R4822 130 10797	MUN2112
7018	R4822 130 42353	BSF19-F2
7019	R4822 130 60511	BC847B
7020	R4822 130 42353	BSF19-F2
7021	R4822 130 42353	BSF19-F2
7051	R4822 209 90538	LA7437A
7060	R4822 209 14807	LC89979M
7200	R4822 209 13047	TDA8361/N5
7201	R4822 209 12635	TDA4665/V4
7205	R4822 130 60511	BC847B
7206	R4822 130 10796	MUN2212
7207	R4822 130 10797	MUN2112
7208	R4822 130 10796	MUN2212
7209	R4822 209 73852	PMBT2369
7210	R5322 130 60508	BC857B
7211	R4822 209 73852	PMBT2369
7212	R4822 209 73852	PMBT2369
7213	R5322 130 60508	BC857B
7214	R4822 130 60511	BC847B
7215	R4822 130 60511	BC847B
7216	R4822 130 60511	BC847B
7240	R4822 209 90462	TDA7056B/N1
7250	R4822 130 60511	BC847B
7260	R5322 209 14481	HEF4053BT
7402	R4822 209 30146	L2722
7403	R4822 130 60511	BC847B
7405	R4822 130 10797	MUN2112
7406	R4822 130 10797	MUN2112
7407	R4822 130 60511	BC847B
7408	R4822 130 60511	BC847B
7410	R4822 209 13145	TMP91C242AN BTVD1-3P
7411	R4822 209 30836	SAA1310P/N2
7490	R4822 130 60511	BC847B
7491	R4822 130 40995	BD438
7492	R4822 130 60511	BC847B
7493	R4822 130 10796	MUN2212
7500	R4822 130 60511	BC847B
7503	R5322 130 60508	BC857B
7504	R5322 130 42136	BC848C
7506	R5322 130 60508	BC857B
7508	R4822 130 60383	BF824
7509	R4822 130 60511	BC847B
7592	R5322 209 11102	HEF4052BT PHIN
7601	R4822 209 31548	LA7282
7603	R4822 130 42615	BC817-40
7604	R4822 130 41715	BC328-40
7605	R4822 130 10796	MUN2212
7606	R4822 130 10796	MUN2212
7650	R5322 130 60508	BC857B
7680	R4822 209 33665	L78M08CV
7681	R4822 130 40981	BC337-25
7682	R4822 130 40981	BC337-25
7690	R5322 130 60068	BC558C
7691	R4822 130 60511	BC847B
7692	R4822 130 60511	BC847B
7693	R5322 130 60068	BC558C
7694	R4822 130 10797	MUN2112
7695	R4822 130 10796	MUN2212
7696	R4822 130 10796	MUN2212
7700	R4822 130 60511	BC847B
7703	R5322 130 42136	BC848C
7750	R4822 130 60511	BC847B
7751	R4822 130 60511	BC847B
7752	R4822 130 60511	BC847B
7753	R4822 130 10796	MUN2212
7762	R5322 130 42136	BC848C
7801	R4822 209 14974	TMP87CS39N PTCM1-3
7805	R4822 130 10796	MUN2212
7812	R4822 212 30842	IR SENSOR TFMS5360
7813	R4822 209 32283	ST24C08CB1
7820	R4822 130 60511	BC847B
7860	R4822 130 60511	BC847B
7861	R4822 130 60511	BC847B
7870	R4822 209 80631	LM339N-00
7880	R4822 209 90131	SAA5281/P/E/M3
7882	R4822 130 60511	BC847B
7883	R5322 130 60508	BC857B

NOTES

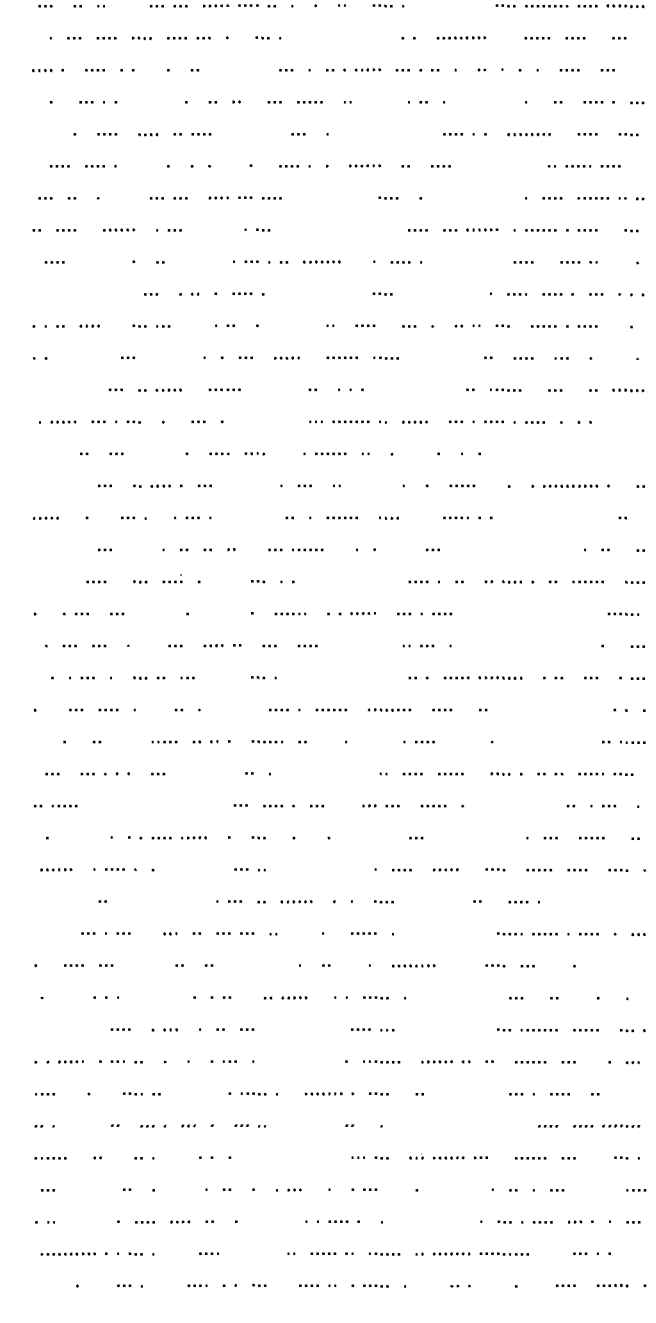

⚠ Safety component, use only this type

HITACHI

HITACHI LTD. TOKYO JAPAN
International Sales Division,
THE HITACHI ATAGO BLDG.
No. 15 -12 Nishi-Shinbashi, 2 - Chome,
Minato-Ku, Tokyo 105, Japan
Tel. Tokyo 3 32581111

HITACHI SALES EUROPA GmbH
Am Seestern 18,
40547 Düsseldorf,
Germany
Tel. 0211 5291 50

HITACHI SALES (HELLAS) S.A.
91, Falirou Street, 117-41 Athens,
Greece
Tel. 92 42-620-4

HITACHI HOME ELECTRONICS (EUROPE) Ltd.
Hitachi House, Station Road, Hayes,
Middlesex UB3 4DR,
England
Tel. 0181 849 2000

HITACHI SALES IBERICA, S.A.
Gran Via Carlos Tercero.101,1 -1
Barcelona 08028
Tel. 3- 330.86.52

HITACHI FRANCE (RADIO-T.V.-ELECTRO-MENAGER) S.A.
4, allée des Sorbiers,
Parc d'active de Chêne,
69671 BRON Cedex,
France
Tel. 72 14-29-70

HITACHI HOME ELECTRONICS NORDIC
Domnarvsgatan 29 Lunda, Box 62
S-163 91 Spanga,
Sweden
Tel. 08 621 8250

Scan & PDF-Design: Schaltungsdienst
Lange oHG
Verlag technische Druckschriften

Zehrensdorfer Straße 11
D-12277 Berlin

http://www.schaltungsdienst.com