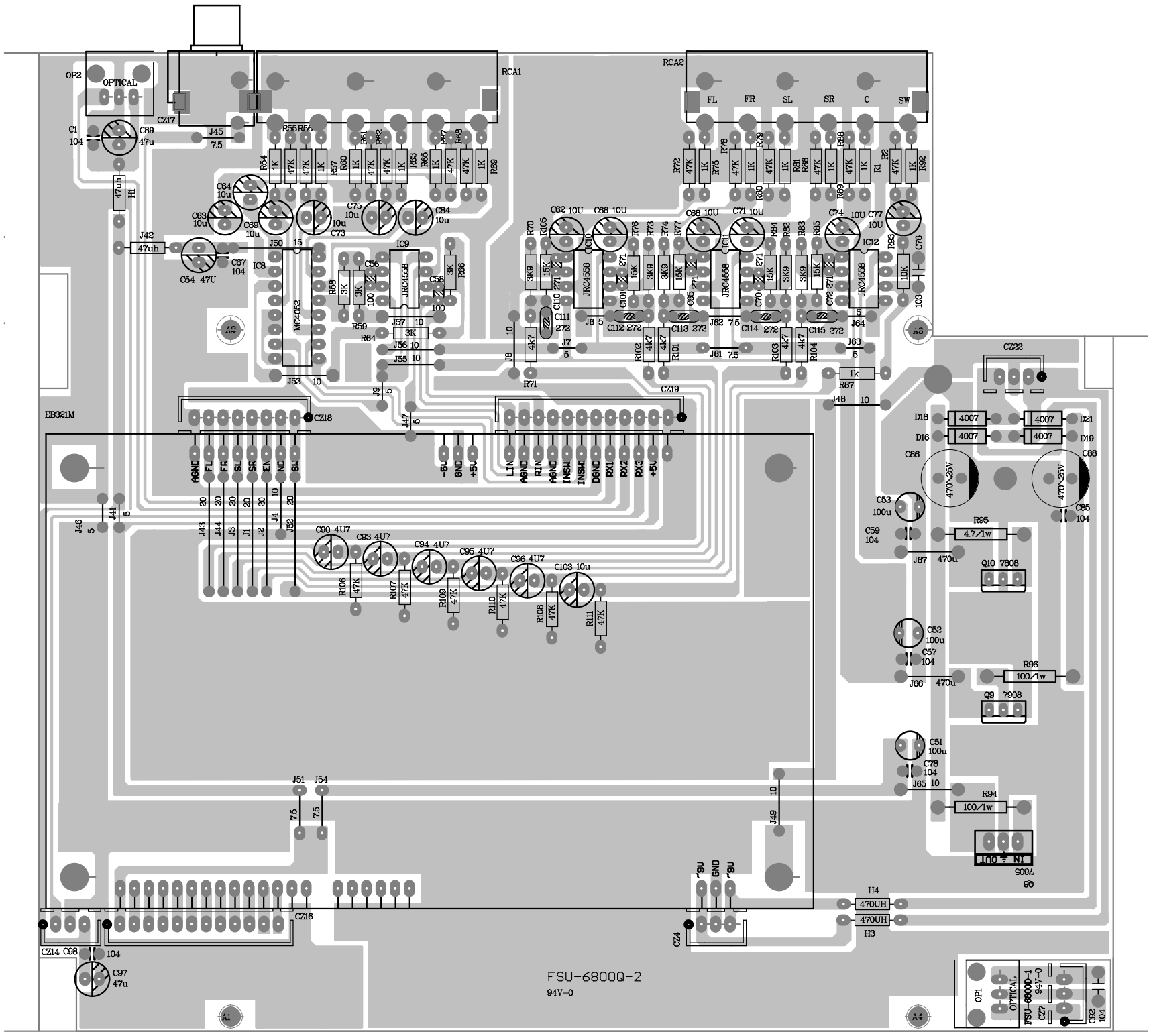
OPTICAL
RCA1
RCA2
FL
FR
SL
SR
C
SW
EB321M
FSU-6800Q-2
94V-0

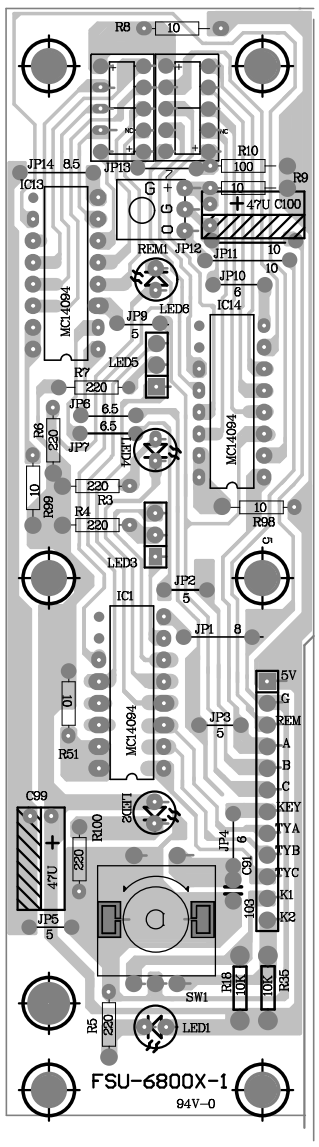
FSU-6800X-1
94V-0