DECK SECTION

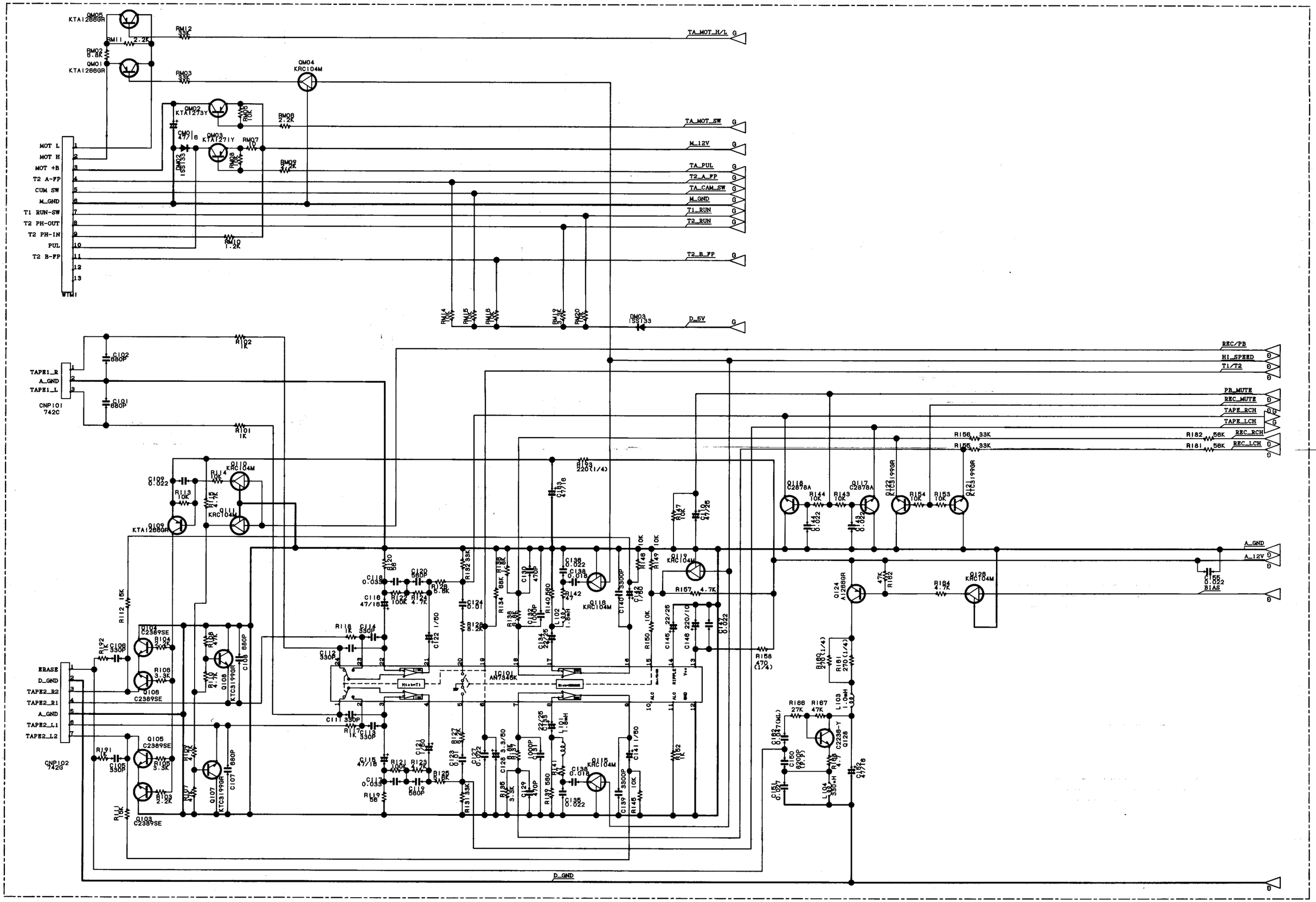

● Specifications or wiring diagrams of this model are subject to change for the improvement without prior notice.

MODEL CD-C470W

TMAPC0075AWZZ

DISPLAY SECTION

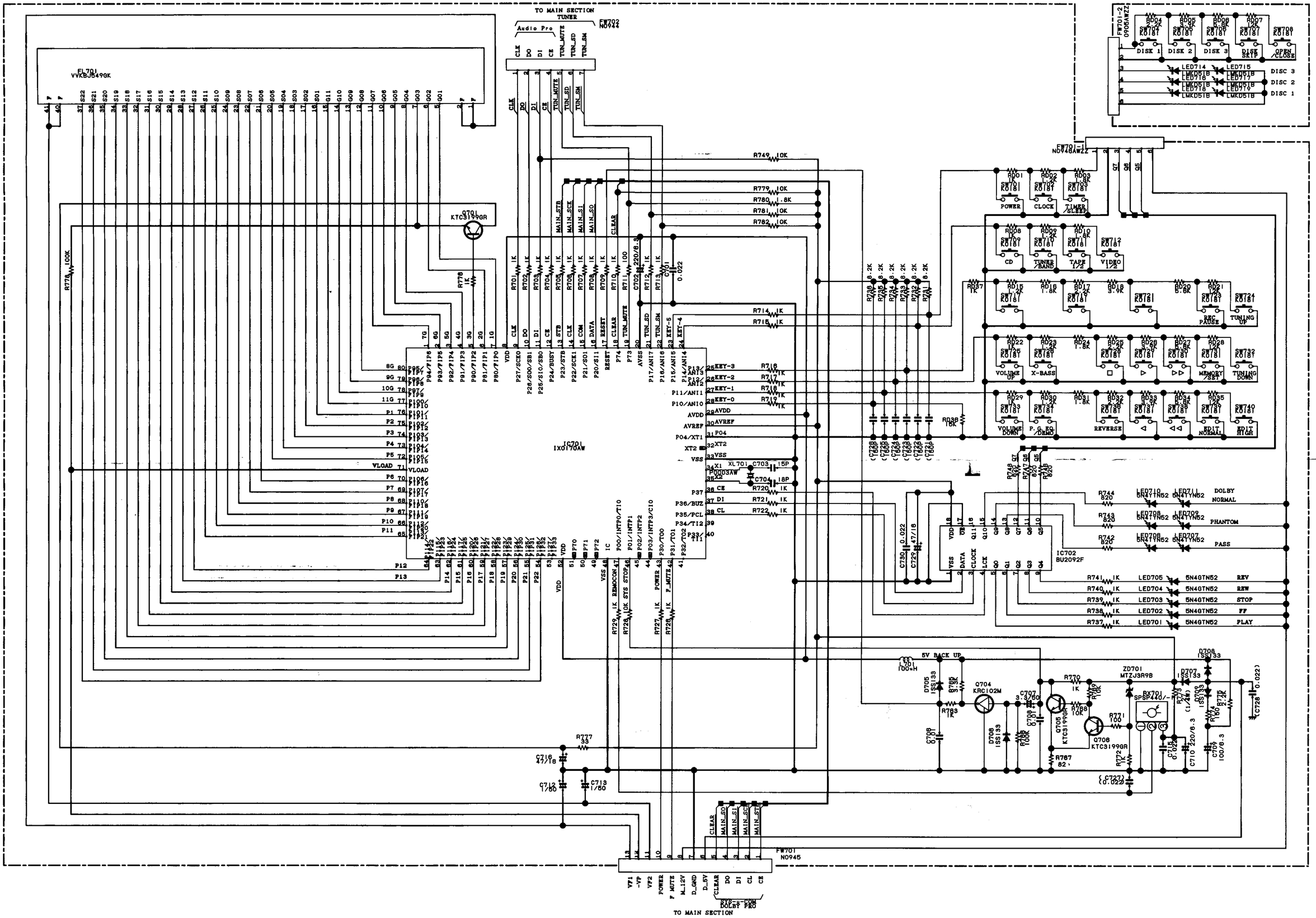

● Specifications or wiring diagrams of this model are subject to change for the improvement without prior notice.

MODEL CD-C470W

TMAPC0075AWZZ

MAIN SECTION

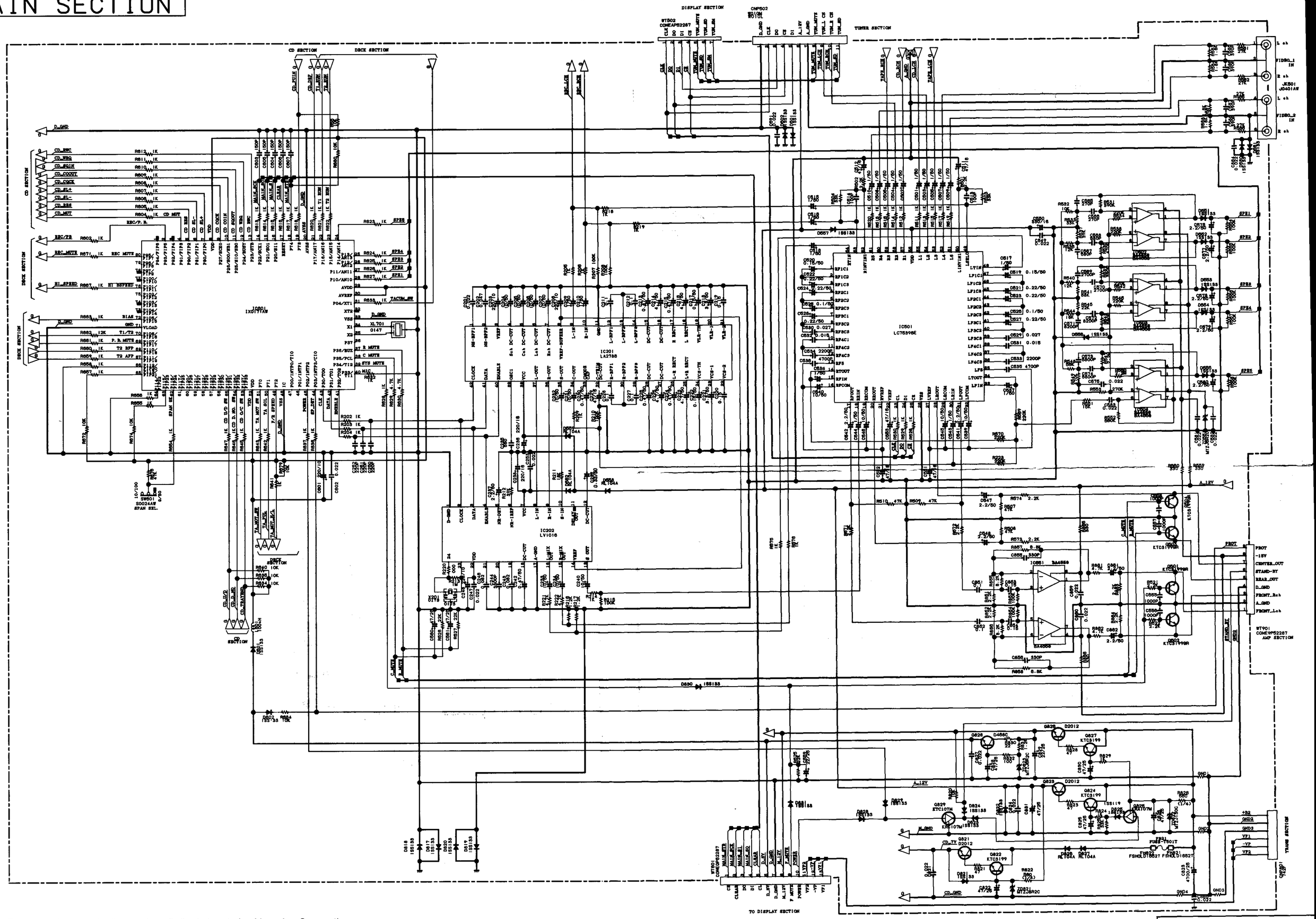

- Manufactured under license from Dolby Laboratories Licensing Corporation.
- Specifications or wiring diagrams of this model are subject to change for the improvement without prior notice.

MODEL CD-C470W

TMAPC0074AWZZ

POWER SECTION

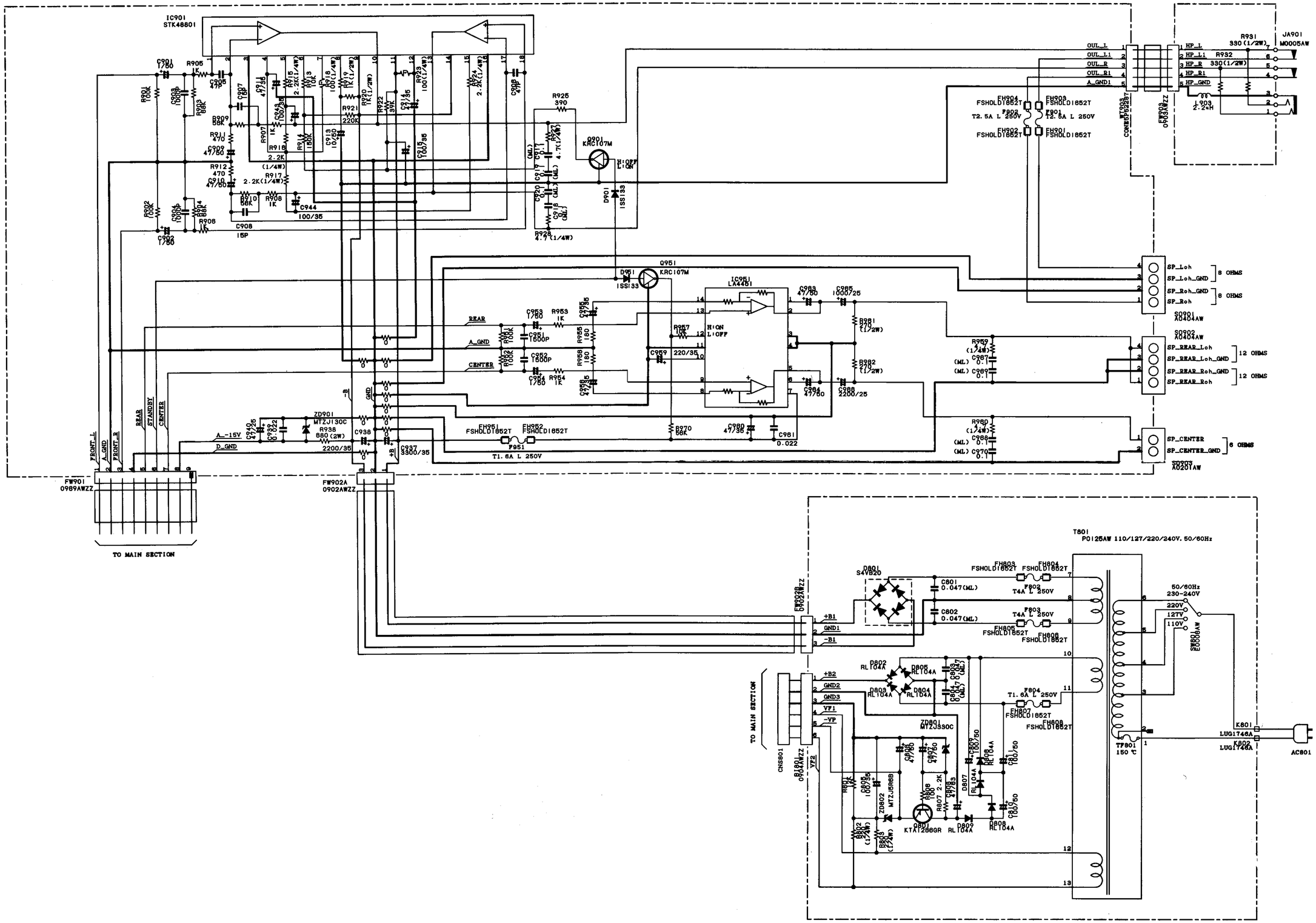

● Specifications or wiring diagrams of this model are subject to change for the improvement without prior notice.

MODEL CD-C470W

TMAPC0074AWZZ

TUNER SECTION

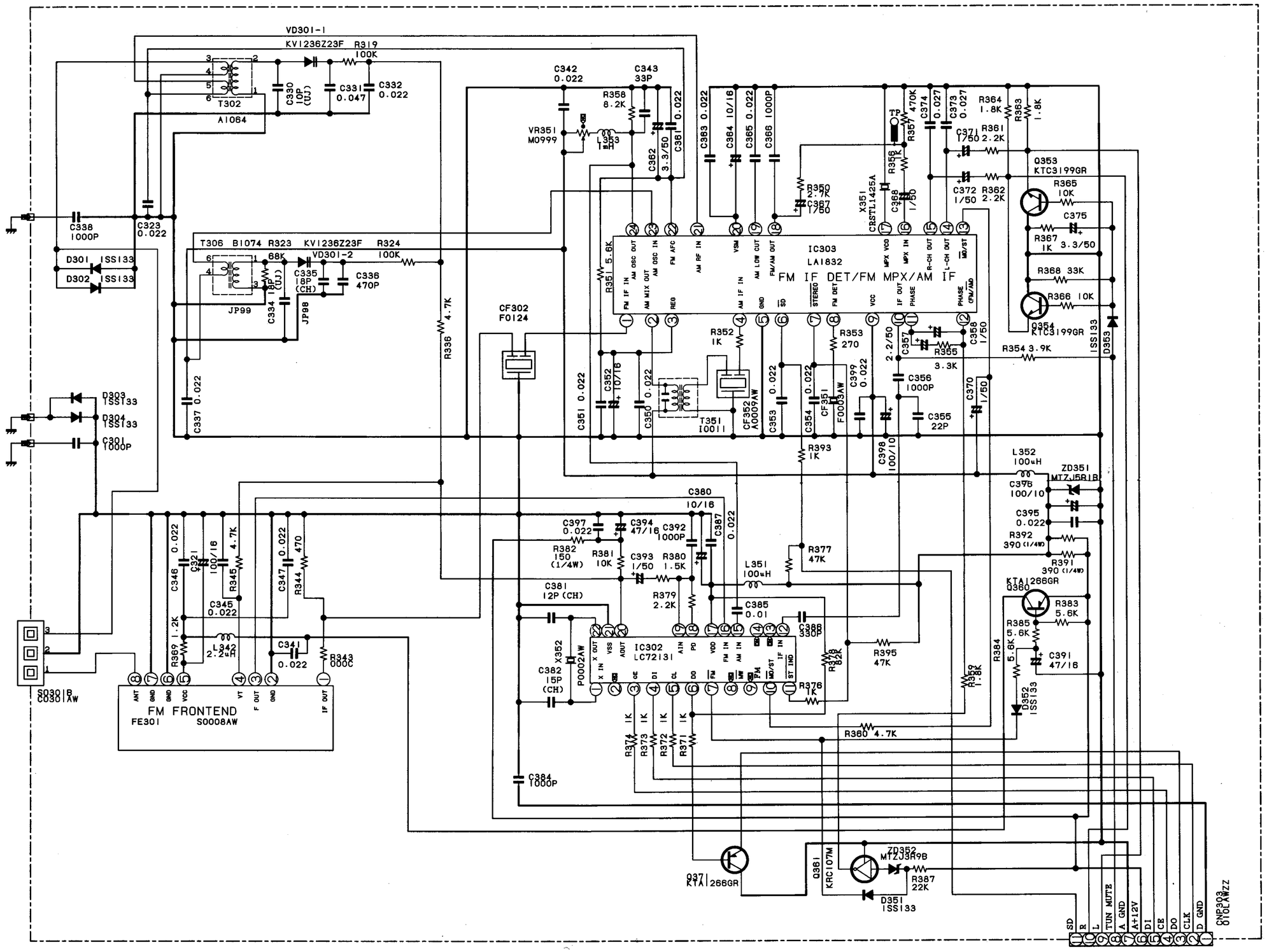

● Specifications or wiring diagrams of this model are subject to change for the improvement without prior notice.

MODEL CD-C470W

TMAPC0076AWZZ