Proprietary data, company confidential.
All rights reserved

Als Betriebsgeheimnis anvertraut
Alle Rechte vorbehalten

SAPident: 43212 / BOM / 000 / 08 Created/Changed: NOLTE, 2004-01-12

1.5V_DSP
/sheet6 7 C
/sheet7 8 B

1.5V_UC
/sheet6 2 C
/sheet6 7 D
/sheet7 8 B

1.8V_CIF
/sheet3 2 A
/sheet7 10 B

1.8V_MEM1
/sheet6 13 F
/sheet6 13 F
/sheet6 7 E
/sheet4 13 C
/sheet4 10 C
/sheet8 10 B
/sheet7 8 B

1.8V_MEM2
/sheet6 8 A
/sheet6 12 B
/sheet6 9 B
/sheet6 11 A
/sheet7 10 B
/sheet7 7 D
/sheet7 8 B

2.65V
/sheet6 4 B
/sheet6 7 D
/sheet6 5 B
/sheet6 2 C
/sheet6 4 B
/sheet5 15 D
/sheet5 3 F
/sheet5 10 A
/sheet9 10 F
/sheet8 10 G
/sheet8 14 B
/sheet8 14 E
/sheet8 14 C
/sheet8 3 B
/sheet7 3 D
/sheet7 8 B

2.9V
/sheet6 2 B
/sheet4 13 C
/sheet4 10 C
/sheet3 2 A
/sheet3 7 B
/sheet9 8 C
/sheet8 10 B
/sheet7 8 B
/sheet10 12 A

2.9V_CIF
/sheet3 6 D
/sheet3 6 D
/sheet3 3 A
/sheet3 3 E
/sheet3 3 E
/sheet3 8 B

A(0:24)
/sheet6 15 E
/sheet6 10 D
/sheet6 8 F
/sheet5 12 G

AC_CLIPIT_DIR
/sheet5 3 F
/sheet8 13 C

AC_CTS
/sheet5 13 E
/sheet8 15 F

AC_DCD
/sheet5 5 B
/sheet8 15 F
/sheet8 8 G

AC_RTS
/sheet5 13 E
/sheet8 15 F

AC_RX
/sheet5 13 E
/sheet8 15 F

AC_TX
/sheet5 13 E
/sheet8 15 F

ADV
/sheet6 15 E
/sheet6 12 A
/sheet5 6 G

AKKU_TYP
/sheet5 13 A
/sheet8 3 B

AVDD_CAMERA
/sheet3 15 D
/sheet3 13 C

BATT+
/sheet4 10 E
/sheet4 13 E
/sheet3 11 D
/sheet5 15 B
/sheet1 6 E
/sheet1 1 E
/sheet8 4 B
/sheet7 11 F
/sheet7 2 B
/sheet7 11 A
/sheet7 3 E
/sheet10 11 A

BATT+_F
/sheet9 8 B
/sheet9 14 E
/sheet9 4 B
/sheet8 14 A
/sheet8 11 D
/sheet8 12 D
/sheet7 2 B
/sheet7 2 F
/sheet7 3 C
/sheet7 3 C
/sheet7 10 A
/sheet7 3 B
/sheet7 3 C
/sheet7 3 A

BATT+_F1
/sheet7 2 B
/sheet7 9 D
/sheet10 2 B
/sheet10 12 A

BB_PM_SIN26M
/sheet4 4 C
/sheet4 2 C
/sheet1 15 C
/sheet7 3 E

BC0
/sheet6 10 D
/sheet6 15 E
/sheet5 7 G

BC1
/sheet6 10 D
/sheet6 15 E
/sheet5 7 G

BFCLKI
/sheet6 15 E
/sheet6 13 B
/sheet5 6 G

BFCLKO
/sheet6 15 E
/sheet6 13 B
/sheet5 6 G

BOOST_OUT
/sheet7 10 E
/sheet7 6 C

BREF
/sheet5 10 B
/sheet5 15 A

CAMERA_CLK
/sheet3 13 C
/sheet3 3 C

CAMERA_DATA_CLK
/sheet3 3 D
/sheet3 13 B

CAMERA_HSYNC
/sheet3 3 C
/sheet3 13 C

CAMERA_I2C_CLK
/sheet3 13 C
/sheet3 8 E

CAMERA_I2C_DATA
/sheet3 13 C
/sheet3 8 F

CAMERA_VSYNC
/sheet3 13 B
/sheet3 1 C

CAM_SENSOR_PD
/sheet3 10 D
/sheet3 7 E

CAM_SENSOR_RESET
/sheet3 13 C
/sheet3 7 E

CAS
/sheet6 12 E
/sheet6 15 E
/sheet5 6 G

CHARGE_CNTRL
/sheet7 10 H
/sheet7 6 D

CHARGE_SOURCE
/sheet7 10 H
/sheet7 6 D

CIF_CLK
/sheet3 7 D
/sheet5 3 C

CIF_CS
/sheet3 7 C
/sheet5 6 B

CIF_CS_DISPLAY
/sheet3 7 C
/sheet5 7 B

CIF_INT
/sheet3 6 C
/sheet5 3 F

CIF_MRST
/sheet3 6 D
/sheet5 5 B

CIF_MTSR
/sheet3 7 D
/sheet5 3 C

CIF_RESET
/sheet3 7 C
/sheet5 3 C

CIF_RS
/sheet3 7 C
/sheet5 3 C

CIF_VSYNC
/sheet3 1 C
/sheet5 13 F
/sheet8 8 F

CKE
/sheet6 10 E
/sheet6 15 E
/sheet5 7 G

CLK32
/sheet3 7 E
/sheet5 5 B

CS3
/sheet6 15 F
/sheet5 7 G

CS_FLASH
/sheet6 15 F
/sheet6 12 A
/sheet5 7 G

CS_FLASH1
/sheet6 15 F
/sheet6 12 A
/sheet5 7 G

CS_SDRAM
/sheet6 12 D
/sheet6 15 F
/sheet5 7 G

CTS
/sheet8 9 E
/sheet8 12 F

D(0:15)
/sheet6 15 B
/sheet6 11 C
/sheet6 12 E
/sheet5 9 G

DB_RTCK
/sheet5 3 D

DB_TCK
/sheet5 3 C

DB_TDI
/sheet5 3 C

DB_TDO
/sheet5 3 C

DB_TMS
/sheet5 3 C

DB_TRST
/sheet5 3 C

DCD
/sheet8 9 E
/sheet8 12 F

DISPLAY_CLK
/sheet4 13 C
/sheet4 10 C
/sheet3 2 E
/sheet8 10 A

DISPLAY_CS1
/sheet4 13 D
/sheet4 10 D
/sheet5 3 C
/sheet8 10 A

DISPLAY_DAT
/sheet4 13 C
/sheet4 10 C
/sheet3 2 E
/sheet8 10 B

DISPLAY_RESET
/sheet4 13 D
/sheet4 10 D
/sheet5 6 B
/sheet8 10 A

DISPLAY_RS
/sheet4 13 D
/sheet4 10 D
/sheet3 2 F
/sheet8 10 A

DVDD_CAMERA
/sheet3 6 F
/sheet3 15 D
/sheet3 13 C

EXTBOOST_EN
/sheet7 11 C
/sheet7 8 D

FLASH_EN
/sheet5 13 F
/sheet8 8 F

FLASH_RESET
/sheet6 12 A
/sheet5 3 E

GND_MIC
/sheet9 4 E
/sheet8 9 E
/sheet7 7 H
/sheet7 7 E

GSM_PA_IN
/sheet1 1 F
/sheet1 9 F

HF_OUT
/sheet2 4 C
/sheet1 1 D

HW_DET_BAND_SEL
/sheet5 3 D
/sheet5 2 G

HW_DET_EXT_STEPUP
/sheet5 2 G
/sheet5 3 D

HW_DET_MOB_TYPE1
/sheet5 2 F
/sheet5 3 D

HW_DET_MOB_TYPE2
/sheet5 2 F
/sheet5 3 D

HW_DET_MOB_TYPE3
/sheet5 2 F
/sheet5 3 D

HW_DET_MOB_TYPE4
/sheet5 2 F
/sheet5 3 D

HW_DET_MOB_TYPE5
/sheet5 2 F
/sheet5 3 D

HW_DET_RF_TYPE
/sheet5 2 G
/sheet5 3 D

I2C_CLK
/sheet5 13 D
/sheet7 3 F

I2C_DAT
/sheet5 13 D
/sheet7 4 F
/sheet7 3 F

IBOOST_SENSE_P
/sheet7 10 E
/sheet7 3 C

IR_AC_RX
/sheet5 13 E
/sheet9 10 E
/sheet8 13 C

IR_AC_SEL
/sheet5 7 B
/sheet9 14 E
/sheet8 15 C

IR_AC_TX
/sheet5 13 E
/sheet9 14 E
/sheet8 13 C

KB_ON_OFF
/sheet9 9 B
/sheet7 2 C

KP_IN0
/sheet5 5 G
/sheet9 9 B
/sheet9 13 B

KP_IN1
/sheet5 5 G
/sheet9 9 B
/sheet9 14 B
/sheet7 6 C

KP_IN2
/sheet5 5 G
/sheet9 9 B
/sheet9 13 B

KP_IN3
/sheet5 5 G
/sheet9 9 B
/sheet9 13 B

KP_IN4
/sheet5 3 F
/sheet9 9 B
/sheet9 14 B

KP_OUT0
/sheet5 3 F
/sheet9 9 B

KP_OUT1
/sheet5 3 F
/sheet9 9 B

KP_OUT2
/sheet5 3 E
/sheet9 9 B

KP_OUT3
/sheet5 3 E
/sheet9 13 B

LIGHT_DISP
/sheet4 13 D
/sheet4 10 D
/sheet8 10 B
/sheet10 6 B

LIGHT_KP
/sheet9 9 B
/sheet10 6 C

LIGHT_PWM1
/sheet7 6 D
/sheet10 2 A

LIGHT_PWM2
/sheet7 6 D
/sheet10 2 C

LIGHT_PWM3
/sheet5 13 D
/sheet10 8 C

MIC1A
/sheet9 6 D
/sheet9 5 D
/sheet7 2 E

MIC1B
/sheet9 5 D
/sheet9 6 D
/sheet7 2 E

MICBIAS_F
/sheet9 5 D
/sheet8 5 F
/sheet7 8 E

MICEA
/sheet8 6 G
/sheet8 9 E
/sheet7 2 E

MICEB
/sheet8 6 F
/sheet8 9 F
/sheet7 2 E

MONO1_LP_OUT
/sheet7 6 E
/sheet7 3 E

MONO1_OUT
/sheet9 6 F
/sheet7 8 E

MONO2_LP_OUT
/sheet7 6 E
/sheet7 3 E

MONO2_OUT
/sheet9 6 G
/sheet7 8 E

PCN_PA_IN
/sheet1 1 F
/sheet1 9 F

PHANTOM_BUF_OUT
/sheet8 9 E
/sheet7 6 E

PIXEL_DATA0
/sheet3 3 C
/sheet3 13 B

PIXEL_DATA1
/sheet3 3 C
/sheet3 13 B

PIXEL_DATA2
/sheet3 3 C
/sheet3 13 B

PIXEL_DATA3
/sheet3 3 C
/sheet3 13 B

PIXEL_DATA4
/sheet3 3 C
/sheet3 13 B

PIXEL_DATA5
/sheet3 3 C
/sheet3 13 B

PIXEL_DATA6
/sheet3 3 C
/sheet3 13 C

PIXEL_DATA7
/sheet3 3 C
/sheet3 13 C

PM_CHARGE_UC
/sheet5 5 B
/sheet7 3 D

PM_I2S_ADC
/sheet5 13 C
/sheet7 7 F

PM_I2S_CLK
/sheet5 13 C
/sheet7 3 F
/sheet7 7 F

PM_I2S_DAC
/sheet5 13 C
/sheet7 3 F

PM_I2S_WA0
/sheet5 13 C
/sheet7 7 F
/sheet7 3 F

PM_INT
/sheet5 13 D
/sheet7 7 F

PM_RESET_1.8V
/sheet6 12 B
/sheet7 7 C

PM_RESET_N
/sheet5 3 E
/sheet7 7 C

PM_RF2_EN
/sheet5 6 B
/sheet7 3 C

PM_RINGIN
/sheet5 11 B
/sheet7 3 E

PM_RTC_INT
/sheet5 3 E
/sheet7 3 C

PM_SSC_CS
/sheet5 6 B
/sheet7 4 F

PM_SSC_MRST
/sheet5 13 D
/sheet7 6 F

PM_SSC_MTSR
/sheet5 13 D
/sheet7 4 F

PM_SSC_SCLK
/sheet5 13 D
/sheet7 4 F

PM_WADOG
/sheet5 5 B
/sheet7 3 D

POWER
/sheet8 9 E
/sheet8 9 E
/sheet7 9 F
/sheet7 8 F

RAS
/sheet6 12 E
/sheet6 15 E
/sheet5 6 G

RD
/sheet6 15 E
/sheet6 12 A
/sheet5 7 G

REF_GND
/sheet7 7 G
/sheet7 6 G
/sheet7 2 B

RF_AFC
/sheet4 4 B
/sheet4 2 B
/sheet5 1 E
/sheet1 15 B

RF_ANT_DET
/sheet4 2 D
/sheet4 4 D
/sheet2 7 D
/sheet5 6 A

RF_BAND_SW
/sheet4 2 F
/sheet4 4 F
/sheet5 6 B
/sheet1 6 F

RF_CLK
/sheet4 4 A
/sheet4 2 A
/sheet5 7 B
/sheet1 15 C

RF_DAT
/sheet4 4 A
/sheet4 2 A
/sheet5 7 B
/sheet1 15 C

RF_FE_DTR_DCS
/sheet4 2 C
/sheet4 4 C
/sheet5 6 B
/sheet1 1 C

RF_FE_DTR_GSM
/sheet4 4 C
/sheet4 2 C
/sheet5 6 B
/sheet1 1 C

RF_I
/sheet4 2 B
/sheet4 4 B
/sheet5 8 B
/sheet1 15 D

RF_IX
/sheet4 2 B
/sheet4 4 B
/sheet5 8 B
/sheet1 15 D

RF_Q
/sheet4 2 B
/sheet4 4 B
/sheet5 8 B
/sheet1 15 D

RF_QX
/sheet4 4 B
/sheet4 2 B
/sheet5 8 B
/sheet1 15 D

RF_RAMP1
/sheet4 2 C
/sheet4 4 C
/sheet5 7 A
/sheet1 1 F

RF_SIN26M
/sheet4 2 C
/sheet4 4 C
/sheet5 1 E
/sheet1 15 C

RF_STR
/sheet4 2 A
/sheet4 4 A
/sheet5 7 B
/sheet1 15 C

RF_TXONPA
/sheet4 2 D
/sheet4 4 D
/sheet5 5 B
/sheet1 1 F

RTS
/sheet8 12 F
/sheet8 9 E

RX
/sheet8 12 F
/sheet8 9 E

SDCLKI
/sheet6 15 E
/sheet6 8 D
/sheet5 6 G

SDCLKO
/sheet6 15 E
/sheet6 8 E
/sheet5 6 G

SENSE_IN1
/sheet7 3 D
/sheet7 11 F

SENSE_IN2
/sheet7 3 D
/sheet7 11 F

SIM_CLK
/sheet5 11 B
/sheet10 7 E

SIM_IO
/sheet5 11 B
/sheet10 7 E

SIM_RST
/sheet5 11 B
/sheet10 7 E

SLEEP2_N
/sheet7 3 D

STEPDOWN_GND
/sheet7 11 C
/sheet7 6 F
/sheet7 10 C
/sheet7 3 B
/sheet7 10 C

STEPUP_GND
/sheet7 10 E
/sheet7 11 E
/sheet7 10 C
/sheet7 9 E
/sheet7 10 E

STEREO1_OUT
/sheet8 9 E
/sheet7 6 E

STEREO2_OUT
/sheet8 9 E
/sheet7 6 E

TBAT
/sheet5 9 B
/sheet5 13 A

TVCO
/sheet4 2 D
/sheet4 4 D
/sheet5 9 B
/sheet5 14 A
/sheet1 15 B

TX
/sheet8 12 F
/sheet8 11 E
/sheet8 9 E

TX_GSM_OUT
/sheet1 1 C
/sheet1 6 F

TX_PCN_OUT
/sheet1 1 C
/sheet1 6 F

USB_D+
/sheet5 13 C
/sheet8 15 F

USB_D-
/sheet5 13 C
/sheet8 15 F

USB_MODE
/sheet8 15 D
/sheet7 8 B

USB_SWITCH_EN
/sheet5 6 B
/sheet8 11 E

VAUDREGA
/sheet7 3 E
/sheet7 8 C
/sheet7 3 C

VBAT
/sheet5 9 B
/sheet5 15 B

VBOOST
/sheet4 10 D
/sheet4 13 D
/sheet9 8 C
/sheet8 10 B
/sheet7 11 D

VBUCK
/sheet7 11 C
/sheet7 2 B

VBUCK_FB
/sheet7 10 C
/sheet7 3 C

VBUCK_LX
/sheet7 6 C
/sheet7 10 C

VCXOEN_UC
/sheet5 1 E
/sheet7 3 D

VDD_AFC
/sheet6 4 B
/sheet7 8 C

VDD_BRIGHT
/sheet2 9 D
/sheet1 9 B
/sheet1 9 A
/sheet1 7 C
/sheet1 8 B
/sheet1 9 A
/sheet1 9 F
/sheet1 11 D
/sheet1 9 A
/sheet1 8 E

VDD_BT
/sheet7 8 C

VDD_CHARGE
/sheet7 3 D
/sheet7 9 G

VDD_RF1
/sheet4 4 E
/sheet4 2 E
/sheet1 8 F
/sheet1 11 A
/sheet7 8 C

VDD_RF2
/sheet4 2 E
/sheet4 4 E
/sheet1 7 A
/sheet7 8 C

VDD_RTC
/sheet6 2 B
/sheet7 2 C
/sheet7 8 B

VDD_SIM
/sheet7 8 B
/sheet10 7 E

VDD_USB
/sheet6 2 C
/sheet8 13 E
/sheet7 8 B

VDD_VIBRA
/sheet9 2 B
/sheet7 8 B

VREFEXS_GND
/sheet7 3 G
/sheet7 3 E
/sheet7 3 G

WAIT
/sheet6 15 E
/sheet6 13 B
/sheet5 6 G

WR
/sheet6 12 D
/sheet6 15 E
/sheet6 12 A
/sheet5 7 G

Confidential
Copyright © Siemens AG

		DATE 20.03.2003	R65-Ulysses V1
		USER Merk	B2 Layout HIT
		APPR'D	TOP HIERARCHY LEVEL
			SCHEMATIC
		MP UC RD ED Ulm	1:1
16.01.2004	Me	Siemens AG	43212
22.12.2003	Nol		netlist1
DATE	NAME	(Created by BOM number: A5B00900121715-11460)	

Proprietary data, company confidential.
All rights reserved

Als Betriebsgeheimnis anvertraut
Alle Rechte vorbehalten

SAP-Ident: 43212 / BOM / 000 / 08 Created/Changed: NOLTE , 2004-01-12

C1000 /sheet5 3 E	C1336 /sheet7 10 D	C2422 /sheet10 9 C	C3983 /sheet1 3 E	R1306 /sheet7 3 C	R3623 /sheet3 3 C	V2650 /sheet9 12 E
C1001 /sheet5 2 E	C1337 /sheet7 6 B	C2423 /sheet10 9 C	C3984 /sheet1 4 F	R1308 /sheet7 3 D	R3625 /sheet3 3 E	V2808 /sheet10 12 B
C1002 /sheet5 2 E	C1338 /sheet7 8 B	C2500 /sheet8 15 C	C3985 /sheet1 5 E	R1309 /sheet7 7 D	R3626 /sheet3 2 E	V2809 /sheet10 13 B
C1003 /sheet5 2 E	C1339 /sheet7 7 C	C2501 /sheet8 13 B	C3986 /sheet1 5 E	R1311 /sheet7 3 B	R3627 /sheet3 3 F	V2821-2 /sheet10 5 C
C1004 /sheet5 7 A	C1340 /sheet7 7 C	C2502 /sheet8 13 B	C3987 /sheet1 4 E	R1313 /sheet7 2 F	R3628 /sheet3 2 A	V2821-1 /sheet10 5 C
C1010 /sheet5 6 A	C1341 /sheet7 7 C	C2503 /sheet8 13 B	C3988 /sheet1 5 E	R1314 /sheet7 2 F	R3633 /sheet3 1 C	V3600 /sheet3 1 B
C1011 /sheet5 10 B	C1342 /sheet7 7 C	C2633 /sheet9 12 E	C3989 /sheet1 6 E	R1315 /sheet7 7 F	R3635 /sheet3 6 E	V3961 /sheet1 13 B
C1012 /sheet5 14 B	C1343 /sheet7 7 C	C2634 /sheet9 10 E	C3990 /sheet1 2 F	R1320 /sheet7 7 D	R3801 /sheet2 8 D	X1000 /sheet5 13 F
C1013 /sheet5 14 C	C1344 /sheet7 8 B	C2635 /sheet9 13 E	C3991 /sheet1 3 F	R1328 /sheet7 7 E	R3802 /sheet2 9 D	X1300 /sheet7 3 H
C1014 /sheet5 15 C	C1345 /sheet7 8 C	C2636 /sheet9 10 F	C3992 /sheet1 5 F	R1340 /sheet7 11 D	R3805 /sheet2 9 C	X1400 /sheet8 2 B
C1037 /sheet5 3 C	C1346 /sheet7 7 E	C2651 /sheet9 11 F	C3993 /sheet1 6 F	R1341 /sheet7 11 D	R3901 /sheet1 2 C	X1504 /sheet8 2 E
C1038 /sheet5 13 F	C1347 /sheet7 7 E	C2652 /sheet9 14 E	C3994 /sheet1 5 F	R1342 /sheet7 9 D	R3902 /sheet1 2 C	X1604 /sheet10 2 E
C1110 /sheet6 5 C	C1348 /sheet7 7 E	C2653 /sheet9 13 E	C3995 /sheet1 6 F	R1343 /sheet7 10 E	R3903 /sheet1 5 B	X1700 /sheet9 1 G
C1120 /sheet6 2 C	C1349 /sheet7 4 E	C2821 /sheet10 3 C	C3996 /sheet1 2 E	R1344 /sheet7 11 F	R3904 /sheet1 5 C	X2202 /sheet8 7 B
C1121 /sheet6 2 C	C1350 /sheet7 7 F	C2823 /sheet10 4 C	C3997 /sheet1 2 E	R1353 /sheet7 9 G	R3905 /sheet1 5 C	X2203 /sheet8 8 C
C1122 /sheet6 2 B	C1351 /sheet7 11 E	C3600 /sheet3 3 B	D1000-2 /sheet6 1 E	R1399 /sheet7 7 C	R3906 /sheet1 5 C	X2705 /sheet9 11 B
C1123 /sheet6 3 B	C1352 /sheet7 11 D	C3601 /sheet3 3 B	D1000-1 /sheet5 12 F	R1500 /sheet8 4 F	R3907 /sheet1 5 D	X3551 /sheet3 11 F
C1124 /sheet6 3 B	C1353 /sheet7 3 D	C3602 /sheet3 3 B	D1000-3 /sheet5 1 A	R1501 /sheet8 4 F	R3908 /sheet1 5 D	X3552 /sheet3 12 F
C1125 /sheet6 3 B	C1354 /sheet7 11 C	C3603 /sheet3 3 B	D1201 /sheet6 10 F	R1502 /sheet8 5 F	R3909 /sheet1 6 D	X3553 /sheet3 14 F
C1126 /sheet6 4 C	C1355 /sheet7 11 D	C3604 /sheet3 11 E	D1203 /sheet6 10 D	R1503 /sheet8 8 E	R3910 /sheet1 6 D	X3600 /sheet3 9 C
C1127 /sheet6 4 C	C1356 /sheet7 11 D	C3605 /sheet3 11 D	D1300 /sheet7 4 F	R1504 /sheet8 8 E	R3911 /sheet1 8 F	X3800 /sheet2 8 C
C1128 /sheet6 5 C	C1357 /sheet7 10 D	C3606 /sheet3 11 E	D2520 /sheet8 13 C	R1505 /sheet8 5 F	R3920 /sheet1 6 D	X3901 /sheet1 9 G
C1129 /sheet6 5 B	C1358 /sheet7 11 D	C3607 /sheet3 11 E	D3601 /sheet3 4 F	R1506 /sheet8 9 G	R3922 /sheet1 11 A	Z1000 /sheet5 2 E
C1130 /sheet6 5 C	C1360 /sheet7 10 F	C3608 /sheet3 13 E	L1300 /sheet7 2 B	R1508 /sheet8 8 F	R3923 /sheet1 10 B	Z1500 /sheet8 13 F
C1131 /sheet6 6 D	C1361 /sheet7 10 F	C3609-1 /sheet3 14 E	L1301 /sheet7 10 C	R1509 /sheet8 14 D	R3924 /sheet1 10 B	Z3961 /sheet1 12 B
C1132 /sheet6 6 D	C1362 /sheet7 11 F	C3609-2 /sheet3 13 E	L1302 /sheet7 10 D	R1510 /sheet8 14 E	R3925 /sheet1 7 D	
C1133 /sheet6 7 D	C1363 /sheet7 7 B	C3610 /sheet3 2 C	L1303 /sheet7 2 B	R1511 /sheet8 14 E	R3926 /sheet1 11 C	
C1134 /sheet6 7 D	C1364 /sheet7 7 B	C3611 /sheet3 11 A	L1318 /sheet7 10 A	R1512 /sheet8 7 D	R3927 /sheet1 12 D	
C1135 /sheet6 7 D	C1381 /sheet7 4 E	C3612 /sheet3 11 A	L1320 /sheet7 7 C	R1514 /sheet8 11 D	R3928 /sheet1 6 A	
C1136 /sheet6 6 E	C1382 /sheet7 4 E	C3613 /sheet3 11 A	L1331 /sheet7 10 D	R1515 /sheet8 12 D	R3929 /sheet1 7 B	
C1137 /sheet6 6 E	C1383 /sheet7 2 E	C3614 /sheet3 11 B	L2633 /sheet9 13 E	R1516 /sheet8 11 D	R3930 /sheet1 8 E	
C1139 /sheet6 6 E	C1384 /sheet7 2 E	C3615 /sheet3 11 B	L3802 /sheet2 9 C	R1517 /sheet8 15 A	R3931 /sheet1 7 A	
C1140 /sheet6 2 C	C1385 /sheet7 2 E	C3616 /sheet3 11 B	L3803 /sheet2 9 C	R1524 /sheet8 6 G	R3962 /sheet1 13 C	
C1141 /sheet6 7 C	C1386 /sheet7 2 E	C3617 /sheet3 1 C	L3804 /sheet2 10 C	R1525 /sheet8 6 F	R3963 /sheet1 14 C	
C1200 /sheet6 8 B	C1387 /sheet7 4 E	C3618 /sheet3 3 D	L3811 /sheet2 5 C	R1591 /sheet8 9 E	R3964 /sheet1 14 B	
C1201 /sheet6 9 B	C1391 /sheet7 6 E	C3803 /sheet2 9 C	L3901 /sheet1 6 C	R1613 /sheet10 4 E	R3965 /sheet1 14 B	
C1202 /sheet6 12 G	C1400 /sheet8 3 B	C3804 /sheet2 10 C	L3902 /sheet1 6 C	R1614 /sheet10 7 E	R3966 /sheet1 15 B	
C1203 /sheet6 12 G	C1401 /sheet8 4 B	C3805 /sheet2 8 D	L3921 /sheet1 9 D	R1703 /sheet9 5 F	R3967 /sheet1 15 B	
C1204 /sheet6 12 G	C1402 /sheet8 4 B	C3811 /sheet2 5 C	L3922 /sheet1 9 D	R1704 /sheet9 5 F	R3981 /sheet1 2 F	
C1205 /sheet6 12 G	C1405 /sheet8 4 B	C3812 /sheet2 6 C	L3923 /sheet1 9 A	R1901 /sheet9 4 D	R3982 /sheet1 2 F	
C1206 /sheet6 9 B	C1426 /sheet8 2 B	C3901 /sheet1 2 C	L3924 /sheet1 10 E	R1902 /sheet9 4 D	R3983 /sheet1 6 F	
C1207 /sheet6 13 G	C1502 /sheet8 6 F	C3902 /sheet1 2 D	L3980 /sheet1 4 F	R1926 /sheet9 5 D	S2700 /sheet9 13 B	
C1208 /sheet6 9 B	C1504 /sheet8 4 D	C3903 /sheet1 6 D	L3981 /sheet1 5 F	R1927 /sheet9 5 D	TP1246 /sheet6 10 B	
C1209 /sheet6 9 B	C1506 /sheet8 9 F	C3904 /sheet1 6 B	L3982 /sheet1 5 F	R2310 /sheet10 4 A	TP1247 /sheet6 9 B	
C1211 /sheet6 9 B	C1507 /sheet8 6 D	C3905 /sheet1 6 C	N1330 /sheet7 11 C	R2311 /sheet10 5 B	TP3602 /sheet3 14 D	
C1220 /sheet6 9 B	C1508 /sheet8 5 F	C3906 /sheet1 6 C	N1501 /sheet8 11 E	R2312 /sheet10 4 B	TP3601 /sheet3 14 D	
C1301 /sheet7 2 B	C1509 /sheet8 6 F	C3907 /sheet1 6 C	N3600 /sheet3 11 E	R2321 /sheet10 3 A	TP3600 /sheet3 11 D	
C1302 /sheet7 4 A	C1510 /sheet8 7 F	C3920 /sheet1 11 A	N3901 /sheet1 4 C	R2415 /sheet10 12 A	TP1013 /sheet5 13 A	
C1303 /sheet7 4 B	C1511 /sheet8 6 F	C3921 /sheet1 10 A	N3921 /sheet1 8 C	R2416 /sheet10 12 A	TP1022 /sheet5 9 B	
C1304-2 /sheet7 2 B	C1512 /sheet8 7 F	C3922 /sheet1 8 B	N3981 /sheet1 3 F	R2417 /sheet10 11 B	TP1012 /sheet5 12 A	
C1304-1 /sheet7 2 B	C1513 /sheet8 8 F	C3923 /sheet1 9 B	R1000 /sheet5 3 F	R2418 /sheet10 11 A	TP1014 /sheet5 15 A	
C1305 /sheet7 10 B	C1514 /sheet8 9 F	C3924 /sheet1 11 B	R1001 /sheet5 3 G	R2419 /sheet10 9 C	TP3971 /sheet1 7 E	
C1306 /sheet7 3 B	C1515 /sheet8 12 D	C3925 /sheet1 10 B	R1003 /sheet5 3 G	R2420 /sheet10 12 C	TP3980 /sheet1 2 F	
C1307 /sheet7 3 B	C1522 /sheet8 5 F	C3926 /sheet1 11 B	R1004 /sheet5 3 G	R2421 /sheet10 12 B	TP3920 /sheet1 13 C	
C1308 /sheet7 3 D	C1523 /sheet8 5 D	C3927 /sheet1 9 B	R1006 /sheet5 3 E	R2422 /sheet10 13 B	TP3970 /sheet1 6 A	
C1309 /sheet7 4 D	C1524 /sheet8 7 F	C3928 /sheet1 8 B	R1012 /sheet5 7 B	R2423 /sheet10 8 C	TP3921 /sheet1 6 D	
C1310 /sheet7 4 D	C1527 /sheet8 12 D	C3929 /sheet1 8 B	R1014 /sheet5 10 B	R2424 /sheet10 12 B	TP1509 /sheet8 14 D	
C1311 /sheet7 4 D	C1528 /sheet8 14 E	C3930 /sheet1 10 B	R1015 /sheet5 9 A	R2520 /sheet8 14 B	TP1334 /sheet7 7 C	
C1312 /sheet7 4 D	C1541 /sheet8 6 F	C3931 /sheet1 7 C	R1016 /sheet5 12 A	R2521 /sheet8 14 B	TP1311 /sheet7 8 B	
C1313 /sheet7 4 D	C1601 /sheet10 4 F	C3932 /sheet1 11 D	R1018 /sheet5 13 A	R2632 /sheet9 12 E	TP1309 /sheet7 8 B	
C1314 /sheet7 4 D	C1602 /sheet10 5 F	C3933 /sheet1 7 D	R1021 /sheet5 15 A	R2633 /sheet9 14 E	TP1320 /sheet7 7 C	
C1315-1 /sheet7 10 B	C1603 /sheet10 5 F	C3934 /sheet1 8 D	R1022 /sheet5 15 B	R2727 /sheet9 8 B	TP1308 /sheet7 8 B	
C1315-2 /sheet7 10 B	C1604 /sheet10 5 F	C3935 /sheet1 8 E	R1023 /sheet5 15 C	R2728 /sheet9 8 C	TP1312 /sheet7 8 B	
C1316 /sheet7 7 C	C1605 /sheet10 6 F	C3936 /sheet1 9 E	R1024 /sheet5 14 D	R2729 /sheet9 8 C	TP1302 /sheet7 4 D	
C1317 /sheet7 3 E	C1606 /sheet10 5 F	C3937 /sheet1 9 E	R1025 /sheet5 14 D	R2871 /sheet10 4 C	TP1318 /sheet7 6 C	
C1318-2 /sheet7 11 B	C1705 /sheet9 4 F	C3938 /sheet1 9 E	R1038 /sheet5 10 A	R2872 /sheet10 3 C	TP1317 /sheet7 8 B	
C1318-1 /sheet7 11 B	C1708 /sheet9 4 F	C3939 /sheet1 9 B	R1039 /sheet5 9 A	R2873 /sheet10 5 C	TP1321 /sheet7 7 C	
C1319 /sheet7 3 E	C1709 /sheet9 4 F	C3940 /sheet1 13 D	R1040 /sheet5 2 F	R2874 /sheet10 3 C	TP1327 /sheet7 10 C	
C1320 /sheet7 8 C	C1901 /sheet9 3 D	C3941 /sheet1 13 D	R1041 /sheet5 3 F	R3600 /sheet3 6 F	TP1307 /sheet7 8 B	
C1321 /sheet7 3 E	C1902 /sheet9 3 D	C3942 /sheet1 13 D	R1042 /sheet5 2 F	R3601 /sheet3 6 F	TP2401 /sheet10 12 B	
C1322 /sheet7 3 E	C1904 /sheet9 3 D	C3943 /sheet1 13 D	R1043 /sheet5 3 F	R3603 /sheet3 2 C	TP2402 /sheet10 13 B	
C1323 /sheet7 3 E	C2100 /sheet9 3 B	C3944 /sheet1 12 E	R1045 /sheet5 3 G	R3604 /sheet3 13 B	V1302 /sheet7 10 C	
C1324 /sheet7 3 E	C2110 /sheet9 5 B	C3945 /sheet1 13 E	R1046 /sheet5 2 G	R3605 /sheet3 13 B	V1303 /sheet7 11 D	
C1325 /sheet7 3 E	C2130 /sheet9 9 C	C3946 /sheet1 13 E	R1047 /sheet5 3 G	R3606 /sheet3 13 B	V1304 /sheet7 10 E	
C1326 /sheet7 3 F	C2131 /sheet9 10 C	C3947 /sheet1 13 E	R1048 /sheet5 2 G	R3607 /sheet3 13 B	V1305-1 /sheet7 10 G	
C1327 /sheet7 3 F	C2132 /sheet9 10 C	C3948 /sheet1 12 D	R1049 /sheet5 3 G	R3608 /sheet3 13 B	V1305-2 /sheet7 10 G	
C1328 /sheet7 4 F	C2133 /sheet9 10 C	C3949 /sheet1 7 D	R1050 /sheet5 2 G	R3609 /sheet3 13 B	V1400 /sheet8 3 B	
C1329-1 /sheet7 6 B	C2134 /sheet9 9 C	C3961 /sheet1 13 B	R1051 /sheet5 3 G	R3610 /sheet3 10 B	V1500 /sheet8 9 G	
C1329-2 /sheet7 6 B	C2135 /sheet9 8 C	C3962 /sheet1 13 B	R1052 /sheet5 2 G	R3611 /sheet3 13 B	V1605 /sheet10 3 F	
C1330-1 /sheet7 6 B	C2231 /sheet8 8 B	C3963 /sheet1 14 B	R1130 /sheet6 2 C	R3612 /sheet3 13 C	V2100 /sheet9 4 B	
C1330-2 /sheet7 6 B	C2232 /sheet8 10 B	C3964 /sheet1 14 B	R1200 /sheet6 11 A	R3613 /sheet3 13 C	V2302 /sheet10 5 B	
C1331 /sheet7 10 B	C2233 /sheet8 9 B	C3965 /sheet1 14 B	R1210 /sheet6 9 B	R3614 /sheet3 13 C	V2303 /sheet10 2 B	
C1332-1 /sheet7 7 B	C2235 /sheet8 10 B	C3966 /sheet1 15 B	R1300 /sheet7 3 B	R3615 /sheet3 13 C	V2404-1 /sheet10 11 B	
C1332-2 /sheet7 8 B	C2236 /sheet8 9 B	C3971 /sheet1 8 E	R1302 /sheet7 3 B	R3616 /sheet3 13 C	V2404-2 /sheet10 10 C	
C1333 /sheet7 6 E	C2237 /sheet8 8 B	C3973 /sheet1 8 E	R1303 /sheet7 2 C	R3617 /sheet3 13 C	V2406 /sheet10 11 B	
C1334 /sheet7 6 E	C2238 /sheet8 9 B	C3981 /sheet1 2 E	R1304 /sheet7 3 C	R3618 /sheet3 11 D	V2407 /sheet10 12 B	
C1335 /sheet7 6 E	C2320 /sheet10 4 B	C3982 /sheet1 2 E	R1305 /sheet7 3 C	R3620 /sheet3 6 C	V2520 /sheet8 15 C	

Confidential
Copyright © Siemens AG

VERS.	CHANGE NUMBER	DATE	NAME
8	11460	16.01.2004	Me
7	11184	22.12.2003	Nol

DATE 20.03.2003
USER Merk
APPR'D
MP UC RD ED Ulm

Siemens AG

R65-Ulysses V1
B2 Layout HIT
TOP HIERARCHY LEVEL
SCHEMATIC

1:1

43212

poslist1

(Created by BOM number: A5B00900121715-11460)

Proprietary data, Company confidential.
all rights reserved

Als Betriebsgeheimnis anvertraut
alle Rechte vorbehalten

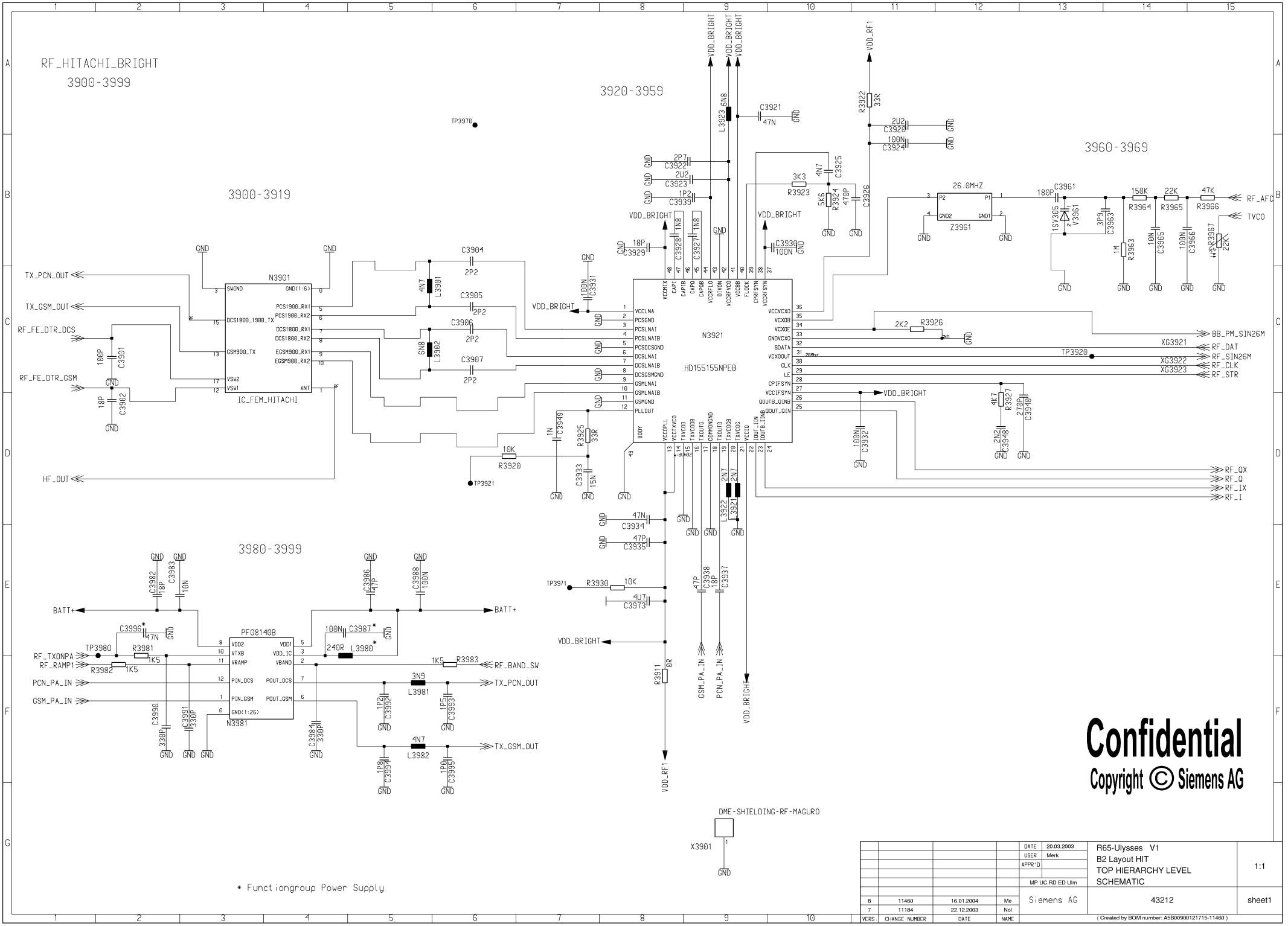

Confidential
Copyright © Siemens AG

				DATE 20.03.2003	R65-Ulysses V1
				USER Merk	B2 Layout HIT
				APPR'D	TOP HIERARCHY LEVEL
				MP UC RD ED Ulm	SCHEMATIC
8	11460	16.01.2004	Me	Siemens AG	43212
7	11184	22.12.2003	Nol		
VERS.	CHANGE NUMBER	DATE	NAME		

1:1

sheet1

(Created by BOM number: A5B00900121715-11460)

SAP-Ident: 43212 / BOM / 000 / 08 Created/Changed: NOLTE, 2004-01-12

Proprietary data, Company confidential.
all rights reserved

ANTENNA _CIRCUIT

3800-3849

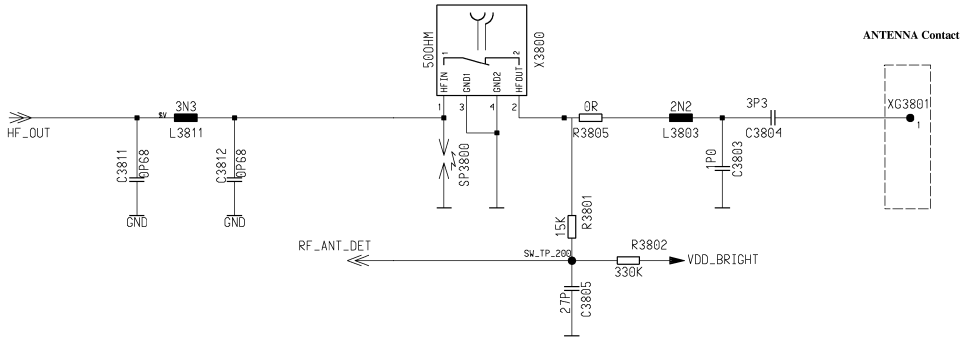

Confidential
Copyright © Siemens AG

			DATE	20.03.2003	R65-Ulysses V1 B2 Layout HIT TOP HIERARCHY LEVEL SCHEMATIC
			USER	Merk	
			APPR'D		
			MP UC RD ED Ulm		
8	11460	16.01.2004	Me	Siemens AG	43212
7	11184	22.12.2003	Nol		
VERS.	CHANGE NUMBER	DATE	NAME		

1:1

sheet2

(Created by BOM number: A5B00900121715-11460)

Als Betriebsgeheimnis anvertraut
alle Rechte vorbehalten

SAP-Ident: 43212 / BOM / 000 / 08 Created/Changed: NOLTE , 2004-01-12

Propietary data, Company confidential.
all rights reserved

Als Betriebsgeheimnis anvertraut
alle Rechte vorbehalten

VGA_CAMERA_1

3500-3599

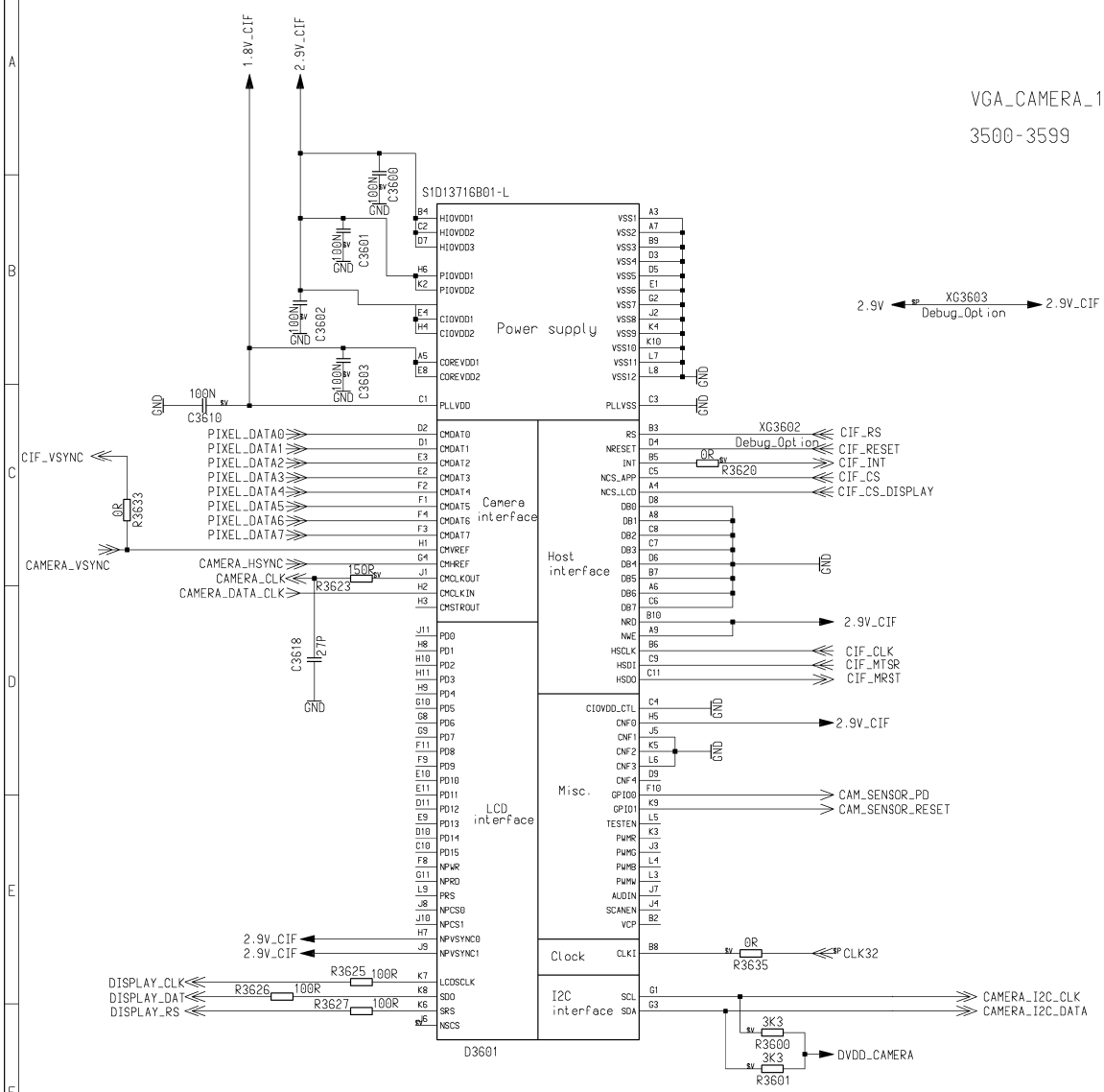

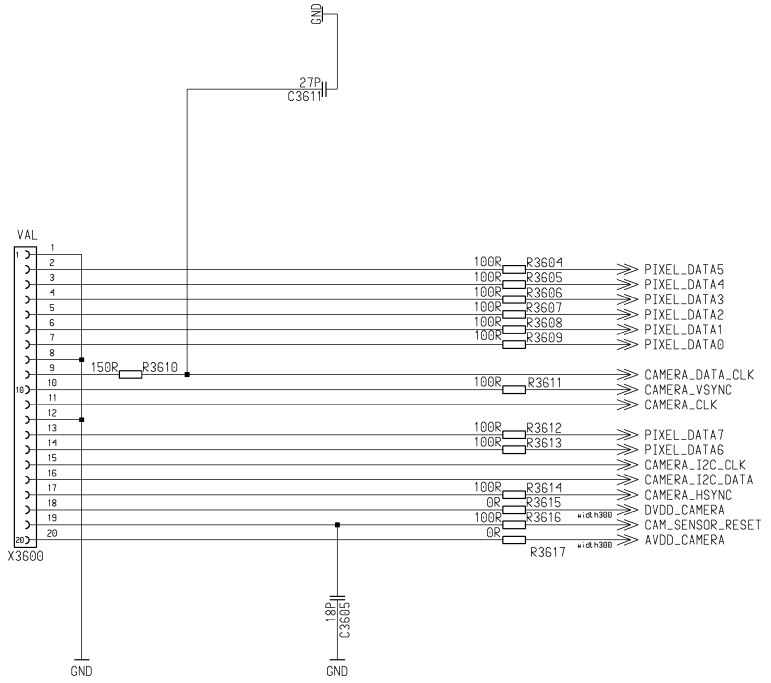

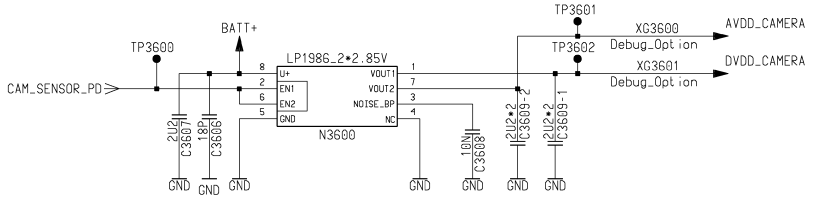

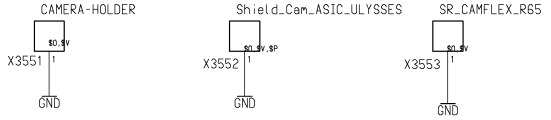

Confidential
Copyright © Siemens AG

				DATE 20.03.2003	R65-Ulysses V1
				USER Merk	B2 Layout HIT
				APPR'D	TOP HIERARCHY LEVEL
				MP UC RD ED Ulm	SCHEMATIC
8	11460	16.01.2004	Me	Siemens AG	43212
7	11184	22.12.2003	Nol		
VERS.	CHANGE NUMBER	DATE	NAME		

1:1

sheet3

(Created by BOM number: A5B00900121715-11460)

SAP-Ident: 43212 / BOM / 000 / 08 Created/Changed: NOLTE , 2004-01-12

Propietary data, Company confidential.
all rights reserved

HIT_POINTS LOGIK/HF_PART_1

400-449

RF_STR	XG400	RF_STR	TRANCEIVER ENABLE SIGNAL
RF_CLK	XG401	RF_CLK	TRANCEIVER CLOCK SIGNAL
RF_DAT	XG402	RF_DAT	TRANCEIVER DATA SIGNAL
RF_I	XG403	RF_I	Bidirectional analoue RX/TX modulatet signal
RF_IX	XG404	RF_IX	
RF_Q	XG405	RF_Q	Baseband signals
RF_QX	XG406	RF_QX	
RF_AFC	XG409	RF_AFC	Reference freqency correction
RF_FE_DTR_DCS	XG412	RF_FE_DTR_DCS	DCSTX enable Asic for Hitachisolution
RF_FE_DTR_GSM	XG417	RF_FE_DTR_GSM	GSMTX enable Asic for Hitachisolution
RF_RAMP1	XG413	RF_RAMP1	analogue power amplifier ramping signal
RF_SIN26M	XG414	RF_SIN26M	26 MHz reference frequency
BB_PM_SIN26M	XG436	BB_PM_SIN26M	Second 26 MHz reference frequency
RF_TXONPA	XG415	RF_TXONPA	Power up of power controller
TVCO	XG416	TVCO	Temperature sensor X-tal
RF_ANT_DET	XG419	RF_ANT_DET	DETECTION internal/external Antenna
VDD_RF1	XG421	VDD_RF1	programmed voltage 1
VDD_RF2	XG418	VDD_RF2	programmed voltage 2
RF_BAND_SW	XG424	RF_BAND_SW	swiched LOW- / HIGH-band

1.8V_MEM1	XG425	1.8V_MEM1	
2.9V	XG426	2.9V	
DISPLAY_CLK	XG427	DISPLAY_CLK	
DISPLAY_DAT	XG428	DISPLAY_DAT	
DISPLAY_RS	XG429	DISPLAY_RS	
DISPLAY_CS1	XG430	DISPLAY_CS1	
DISPLAY_RESET	XG431	DISPLAY_RESET	
VBOOST	XG432	VBOOST	
LIGHT_DISP	XG433	LIGHT_DISP	

BATT+	XG434	BATT+

SAR-GND-PAD

Confidential
Copyright © Siemens AG

VERS.	CHANGE NUMBER	DATE	NAME			
8	11460	16.01.2004	Me	DATE 20.03.2003	R65-Ulysses V1	1:1
7	11184	22.12.2003	Nol	USER Merk	B2 Layout HIT	
				APPR'D	TOP HIERARCHY LEVEL	
				MP UC RD ED Ulm	SCHEMATIC	
				Siemens AG	43212	sheet4

(Created by BOM number: A5B00900121715-11460)

Als Betriebsgeheimnis anvertraut
alle Rechte vorbehalten

SAP-Ident: 43212 / BOM / 000 / 08 Created/Changed: NOLTE, 2004-01-12

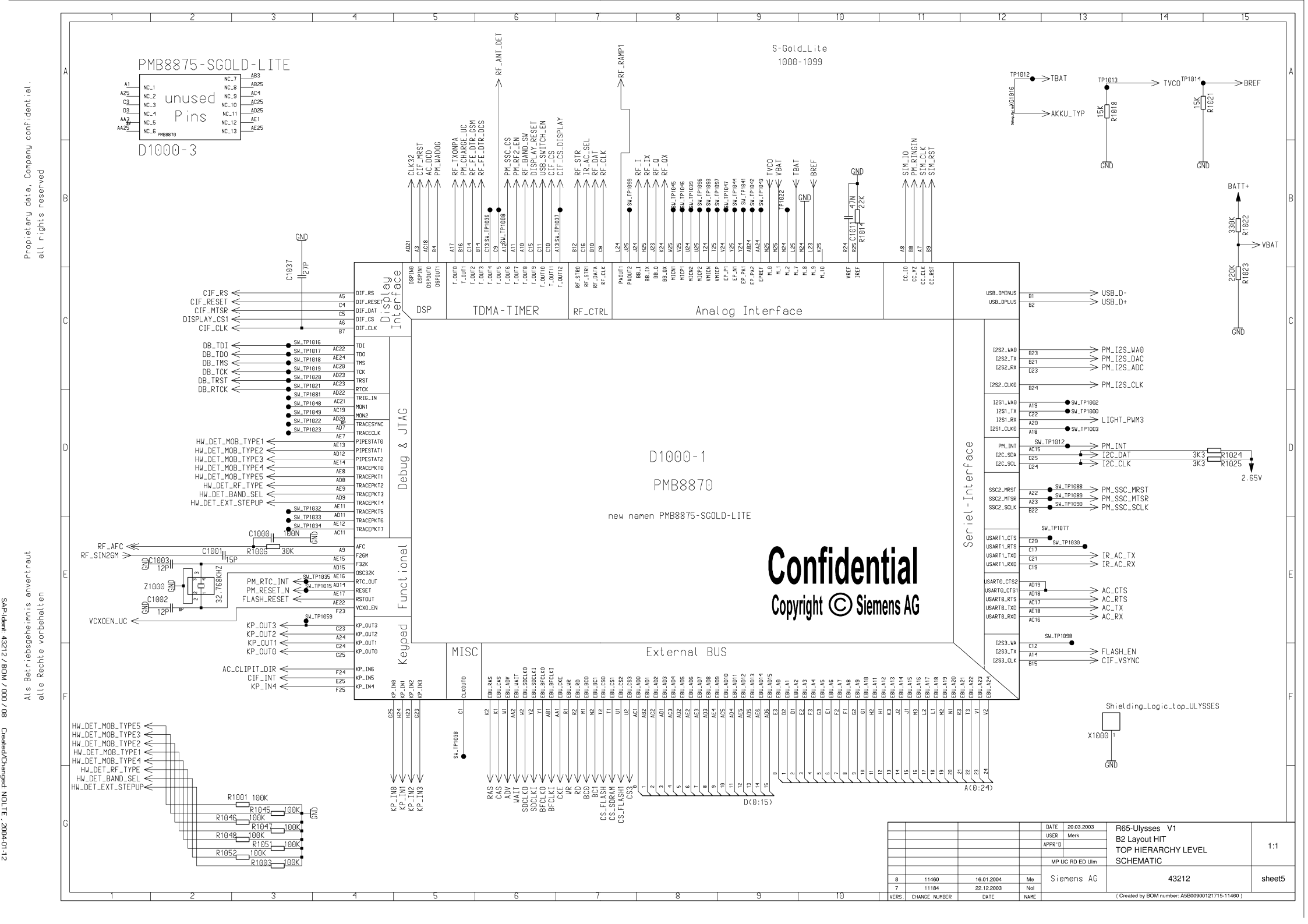

Propietary data, Company confidential.
all rights reserved

Als Betriebsgeheimnis anvertraut
alle Rechte vorbehalten

SAP-Ident: 43212 / BOM / 000 / 08 Created/Changed: NOLTE, 2004-01-12

Proprietary data, Company confidential.
all rights reserved

Als Betriebsgeheimnis anvertraut
alle Rechte vorbehalten

S-Goldlite Supply-Domain
1100-1199

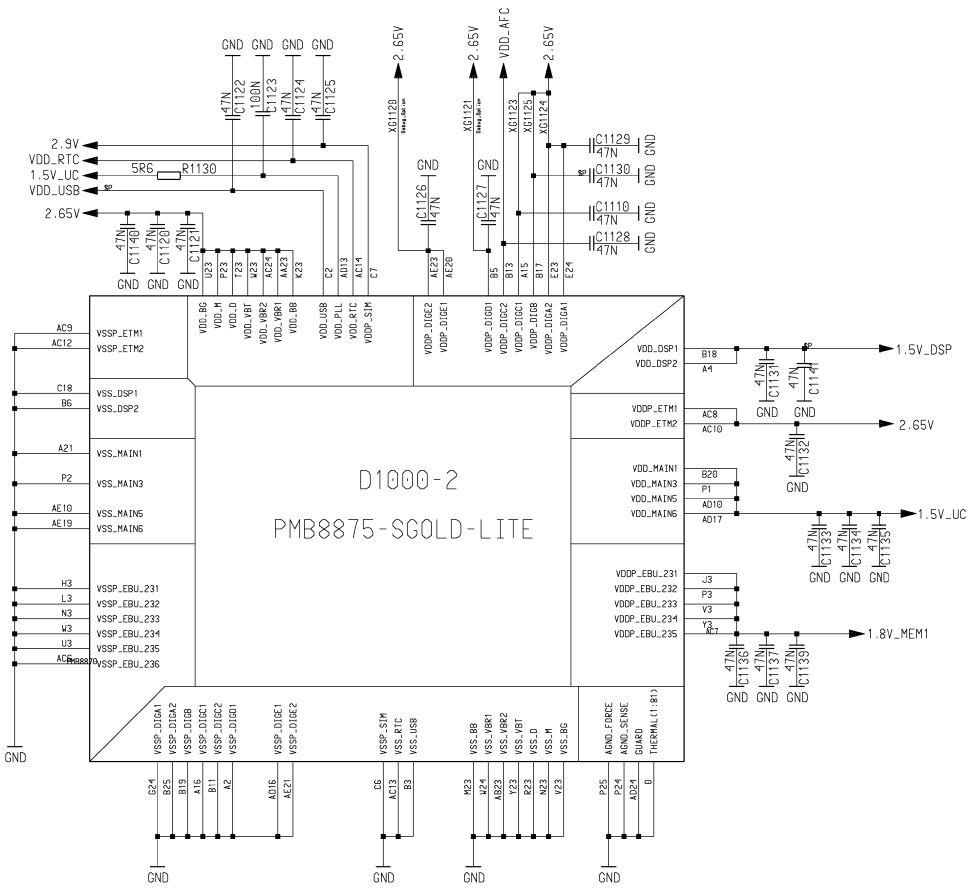

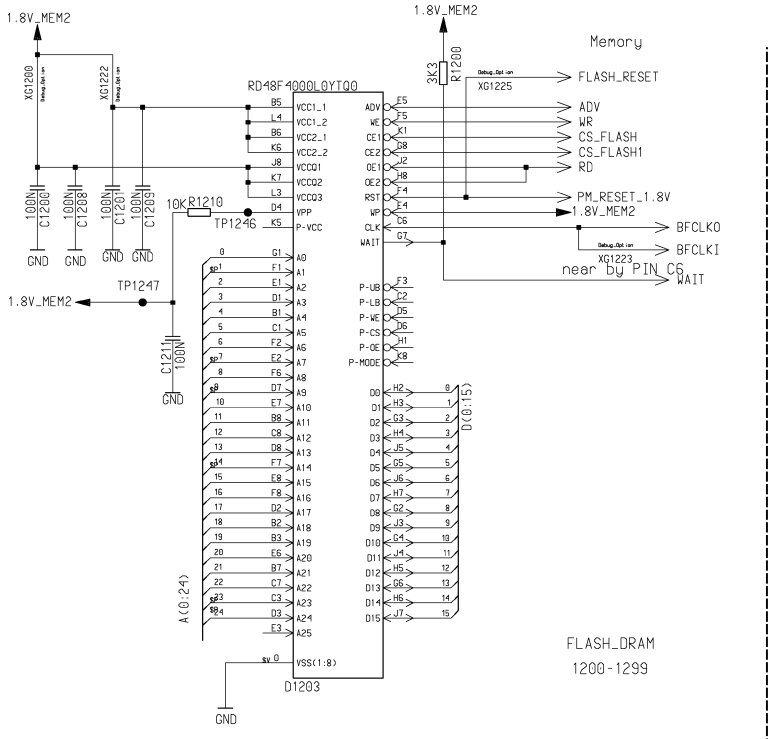

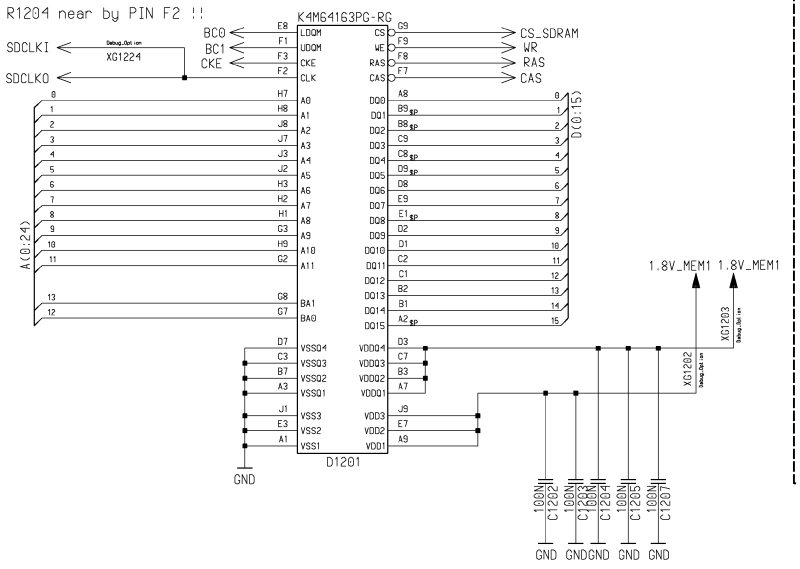

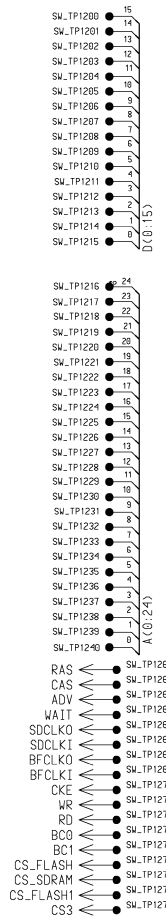

Confidential

Copyright © Siemens AG

			DATE	20.03.2003	R65-Ulysses V1 B2 Layout HIT TOP HIERARCHY LEVEL SCHEMATIC
			USER	Merk	
			APPR'D		
			MP UC RD ED Ulm		
8	11460	16.01.2004	Me	Siemens AG	43212
7	11184	22.12.2003	Nol		
VERS.	CHANGE NUMBER	DATE	NAME		

1:1

sheet6

(Created by BOM number: A5B00900121715-11460)

SAP-Ident: 43212 / BOM / 000 / 08 Created/Changed: NDLTE, 2004-01-12

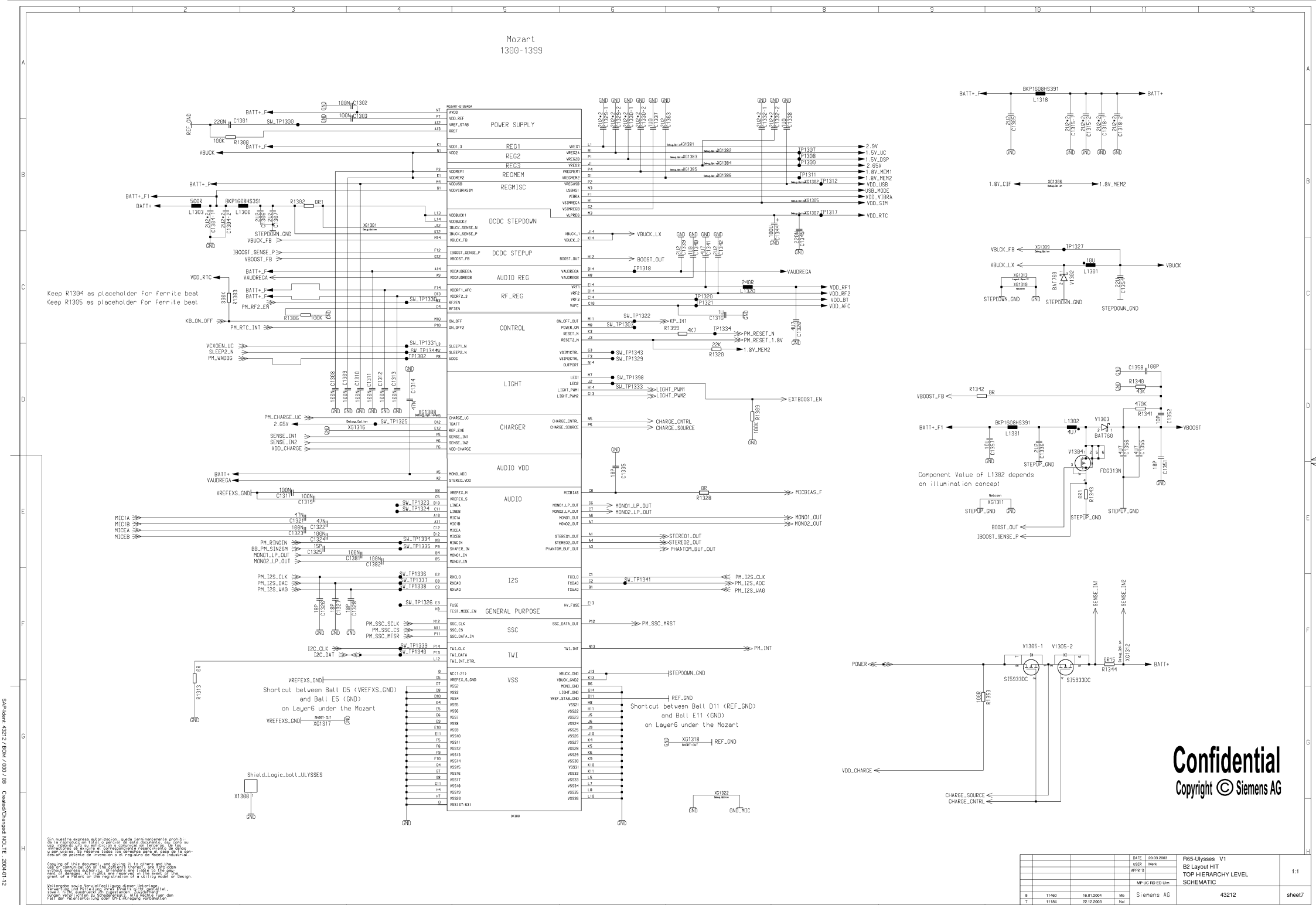
Mozart
1300-1399
POWER SUPPLY
REG1
REG2
REG3
REGMEM
REGMISC
DCDC STEPDOWN
DCDC STEPUP
AUDIO REG
RF_REG
CONTROL
LIGHT
CHARGER
AUDIO VDD
AUDIO
I2S
GENERAL PURPOSE
SSC
TWI
VSS
Keep R1304 as placeholder for ferrite beat
Keep R1305 as placeholder for ferrite beat
Shortcut between Ball D5 (VREFXS_GND) and Ball E5 (GND) on Layer6 under the Mozart
Shortcut between Ball D11 (REF_GND) and Ball E11 (GND) on Layer6 under the Mozart
Component Value of L1302 depends on illumination concept
Shield_Logic_bott_ULYSSES
Confidential
Copyright © Siemens AG
Siemens AG
R65-Ulysses V1
B2 Layout HIT
TOP HIERARCHY LEVEL
SCHEMATIC
43212
sheet7
(Created by BOM number: A5B00900121715-11460)

Propietary data, Company confidential.
all rights reserved

Als Betriebsgeheimnis anvertraut
alle Rechte vorbehalten

SAP-Ident: 43212 / BOM / 000 / 08 Created/Changed: NOLTE , 2004-01-12

BATTERY CONNECTOR

1400-1449

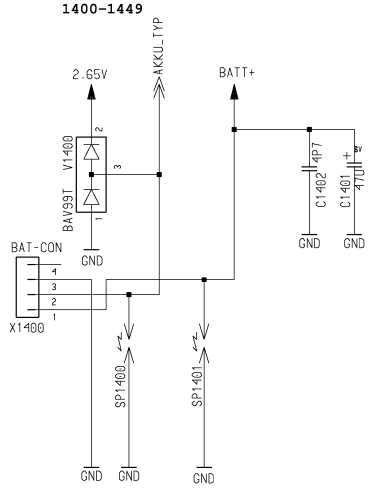

Logic/Display_Interface
2200-2299

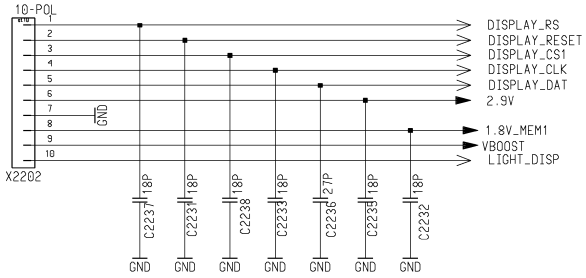

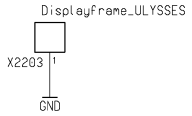

Clipit Pads
2500-2549

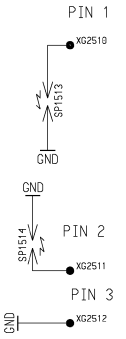

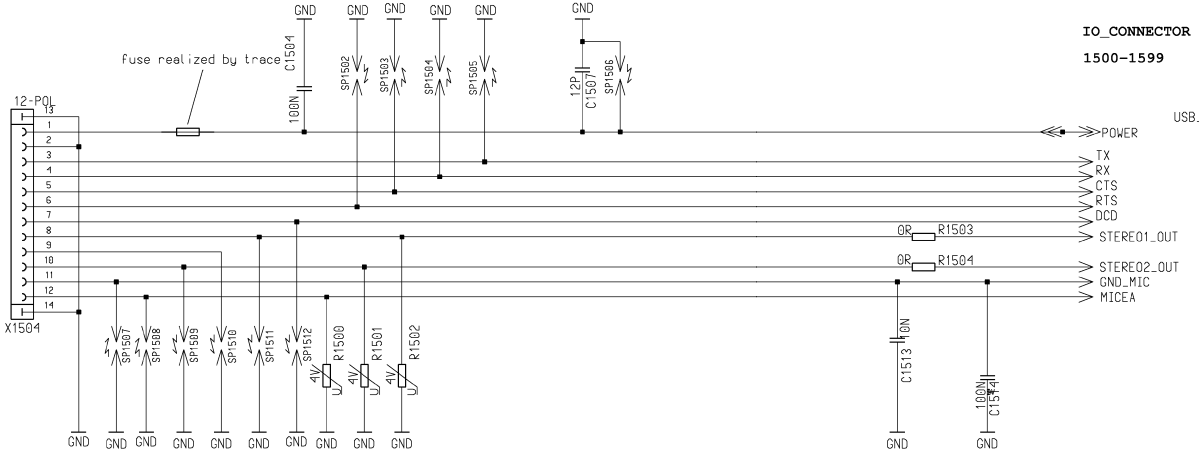

IO_CONNECTOR

1500-1599

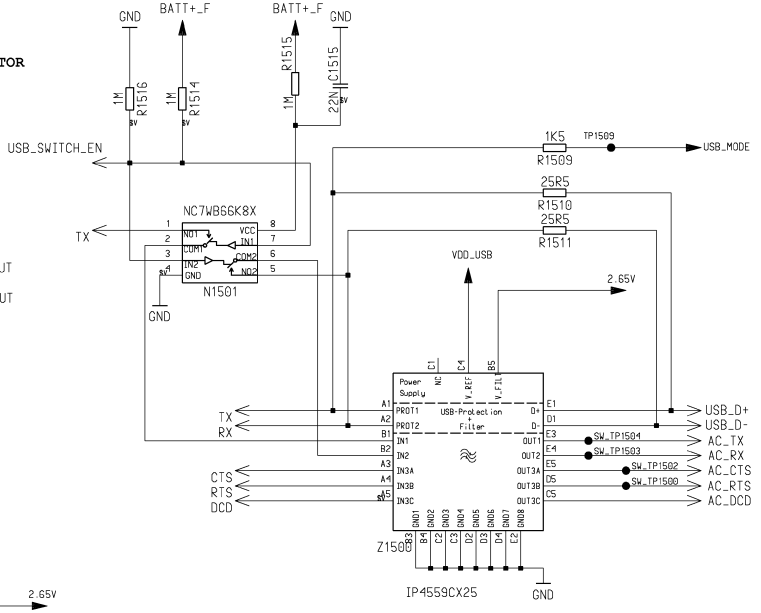

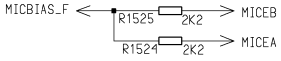

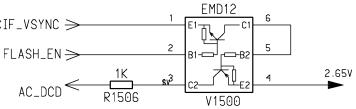

Confidential

Copyright © Siemens AG

			DATE	20.03.2003	R65-Ulysses V1
			USER	Merk	B2 Layout HIT
			APPR'D		TOP HIERARCHY LEVEL
			MP UC RD ED Ulm		SCHEMATIC
8	11460	16.01.2004	Me	Siemens AG	43212
7	11184	22.12.2003	Nol		
VERS.	CHANGE NUMBER	DATE	NAME		

1:1

sheet8

(Created by BOM number: A5B00900121715-11460)

Proprietary data, Company confidential.
all rights reserved

Als Betriebsgeheimnis anvertraut
alle Rechte vorbehalten

VIBRA_CIRCUIT

2100-2149

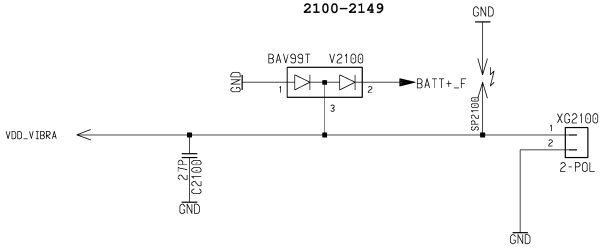

BOARD TO BOARD CONNECTOR MMI

2700-2799

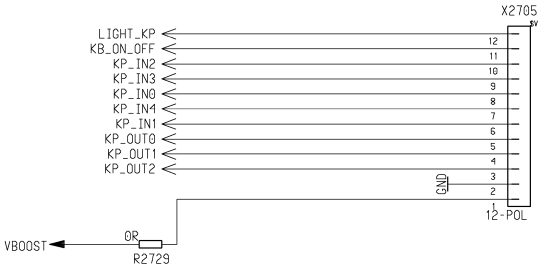

JOYSTICK

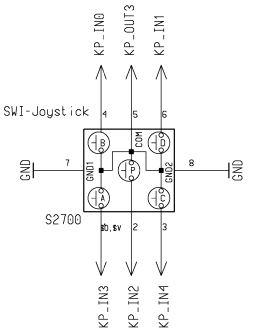

MICROPHONE_CIRCUIT_1

1900-1999

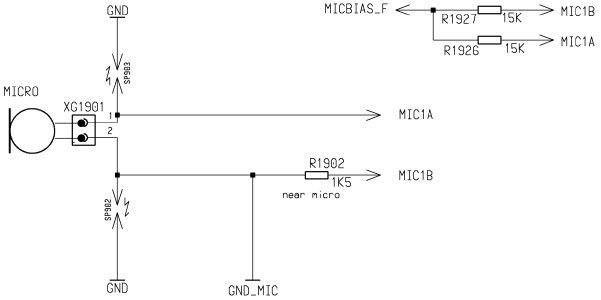

IRDA

2650-2699

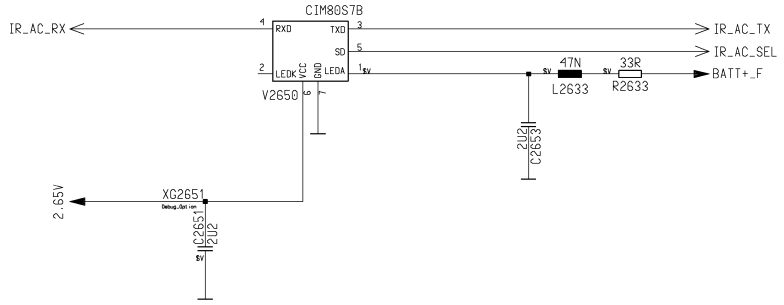

SPEAKER_SOLUTION_1

1700-1749

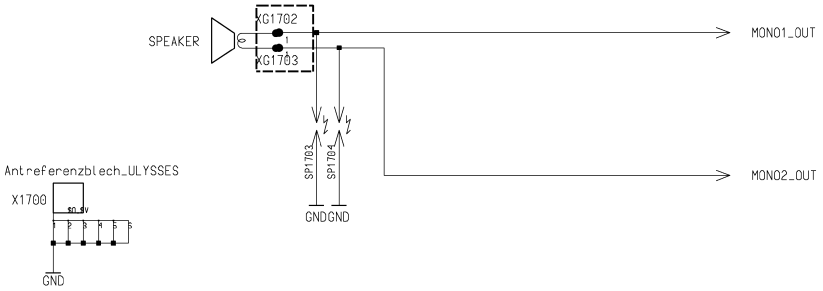

Confidential
Copyright © Siemens AG

				DATE 20.03.2003	R65-Ulysses V1
				USER Merk	B2 Layout HIT
				APPR'D	TOP HIERARCHY LEVEL
				MP UC RD ED Ulm	SCHEMATIC
8	11460	16.01.2004	Me	Siemens AG	43212
7	11184	22.12.2003	Nol		
VERS.	CHANGE NUMBER	DATE	NAME	(Created by BOM number: A5B00900121715-11460)	

1:1

sheet9

SAP-Ident: 43212 / BOM / 000 / 08 Created/Changed: NOLTE , 2004-01-12

Propietary data, Company confidential.
all rights reserved

Als Betriebsgeheimnis anvertraut
alle Rechte vorbehalten

SAP-Ident: 43212 / BOM / 000 / 08 Created/Changed: NOLTE, 2004-01-12

DISPLAY_BACKLIGHT

2300-2399

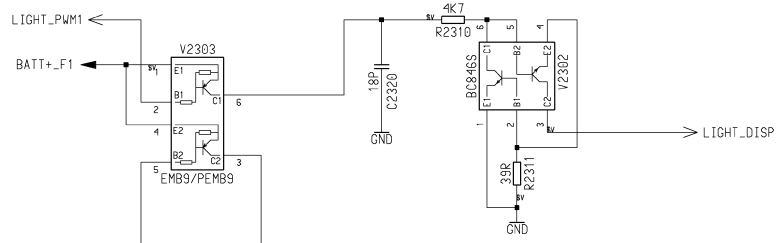

KEYPAD_BACKLIGHT

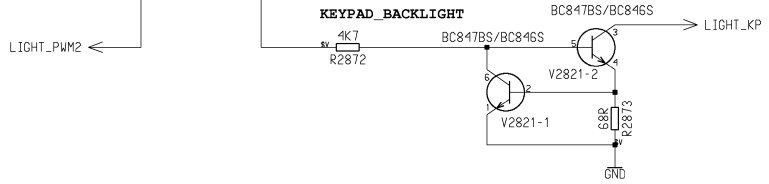

NIGHT_DESIGN_LIGHT

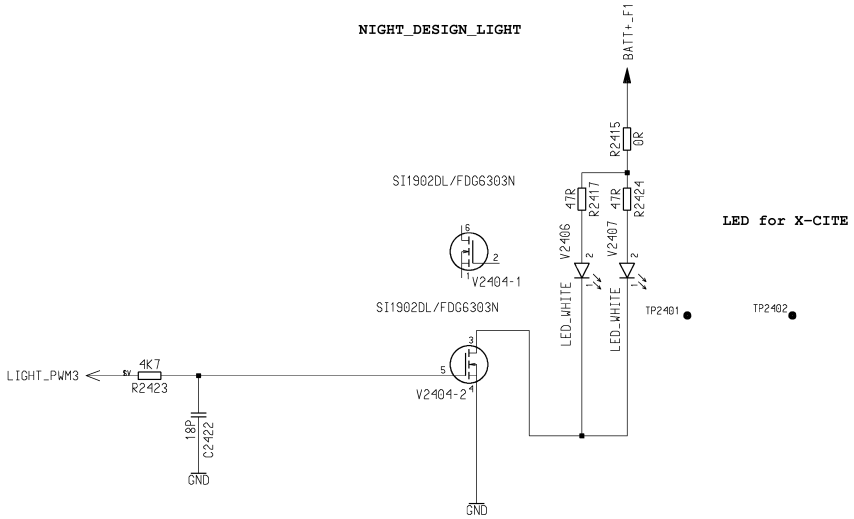

SIM_INTERFACE

1600-1659

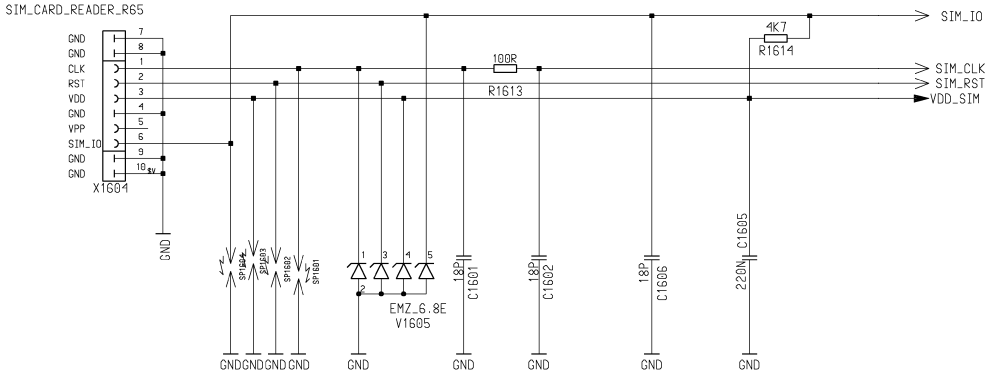

Confidential
Copyright © Siemens AG

				DATE 20.03.2003	R65-Ulysses V1
				USER Merk	B2 Layout HIT
				APPR'D	TOP HIERARCHY LEVEL
				MP UC RD ED Ulm	SCHEMATIC
8	11460	16.01.2004	Me	Siemens AG	43212
7	11184	22.12.2003	Nol		
VERS.	CHANGE NUMBER	DATE	NAME		

1:1

sheet10

(Created by BOM number: A5B00900121715-11460)

PROPRIETARY DATA, COMPANY CONFIDENTIAL
ALL RIGHTS RESERVED

ALS BETRIEBSGEHEIMNIS ANVERTRAUT
ALLE RECHTE VORBEHALTEN

SAP-Ident: 43213 / BOM / 000 / 08 Created/Changed: NOLTE, 2004-01-15

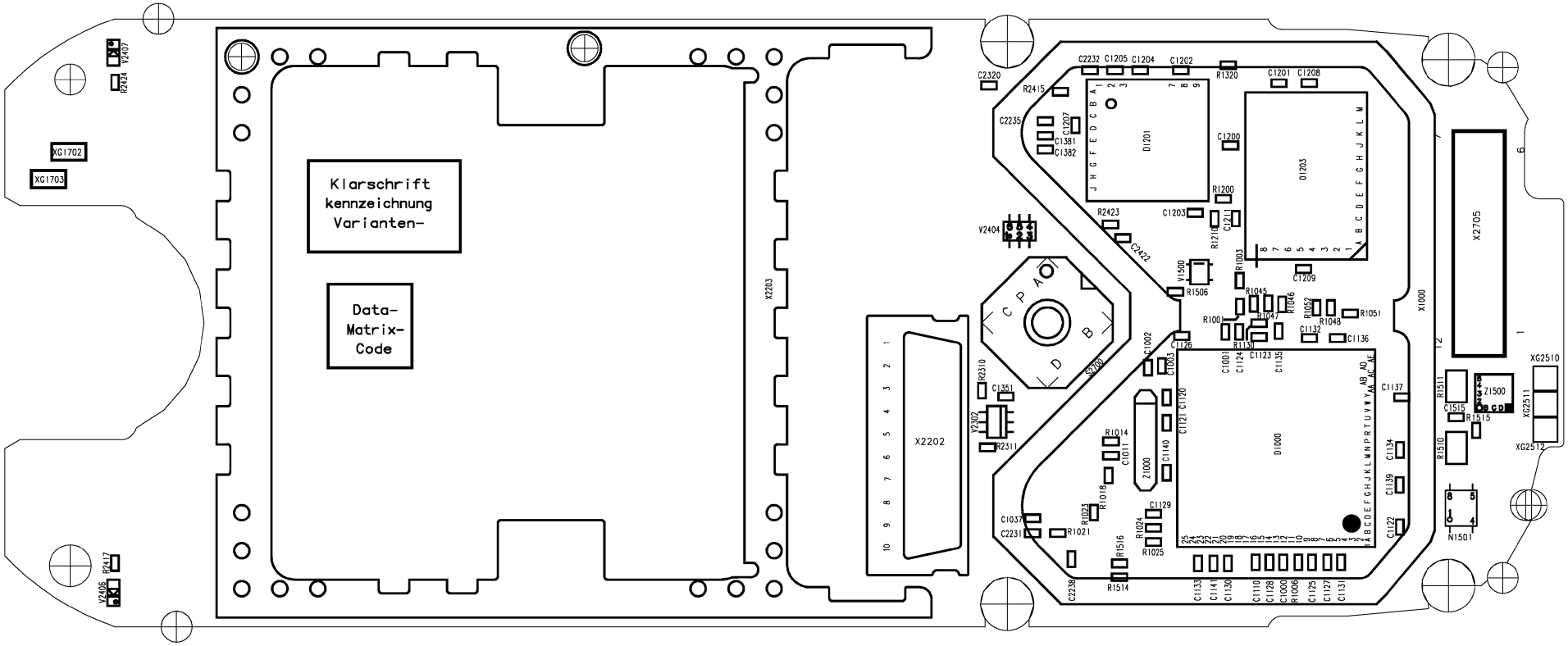

C1000	8D	C1136	9C	C2320	7B	R1210	8B	X2705	10C
C1001	8C	C1137	9C	C2422	7B	R1320	8A	Z1000	8C
C1002	8C	C1139	9C	D1000	9C	R1506	8B	Z1500	10C
C1003	8C	C1140	8C	D1201	7B	R1510	9C		
C1011	7C	C1141	8C	D1203	9B	R1511	9C		
C1037	7C	C1200	8B	N1501	9C	R1514	7D		
C1110	8D	C1201	8B	R1001	8B	R1515	10C		
C1120	8C	C1202	8A	R1003	8B	R1516	7D		
C1121	8C	C1203	8B	R1006	9D	R2310	7C		
C1122	9C	C1204	8A	R1014	7C	R2311	7C		
C1123	8C	C1205	7A	R1018	7C	R2415	7B		
C1124	8C	C1207	7B	R1021	7C	R2417	1D		
C1125	9D	C1208	9B	R1023	7C	R2423	7B		
C1126	8C	C1209	9B	R1024	8C	R2424	1A		
C1127	9D	C1211	8B	R1025	8C	S2700	7B		
C1128	8D	C1351	7C	R1045	8B	V1500	8B		
C1129	8C	C1381	7B	R1046	8B	V2302	7C		
C1130	8D	C1382	7B	R1047	8B	V2404	7B		
C1131	9D	C1515	9C	R1048	9B	V2406	1D		
C1132	9C	C2231	7C	R1051	9B	V2407	1A		
C1133	8D	C2232	7A	R1052	9B	X1000	9D		
C1134	9C	C2235	7B	R1130	8C	X2202	6C		
C1135	8C	C2238	7C	R1200	8B	X2203	2A		

Confidential
Copyright © Siemens AG

Achtung : Hoehenprofil C24___-___-___-___-42 (gilt nur fuer Entwicklung)
Liefervarianten siehe : V24851-Z2000-A1-*-35

VERS.	CHANGE NUMBER	DATE	NAME		
8	11460	16.01.2004	Me	SIEMENS AG	43213
7	11184	22.12.2003	Nol		

DATE 20.03.2003
NAME Merk
APPR'D
STD
MP UC RD ED Ulm

R65-Ulysses V1
B2 Layout HIT
WIRING DIAGRAMM (SOLDER SIDE 1)

3:1

SHEET 1+

(Created by BOM number: A5B00900121715-11460)

PROPRIETARY DATA, COMPANY CONFIDENTIAL
ALL RIGHTS RESERVED

ALS BETRIEBSGEHEIMNIS ANVERTRAUT
ALLE RECHTE VORBEHALTEN

SAPident: 43213 / BOM / 000 / 08 Created/Changed: NOLTE , 2004-01-15

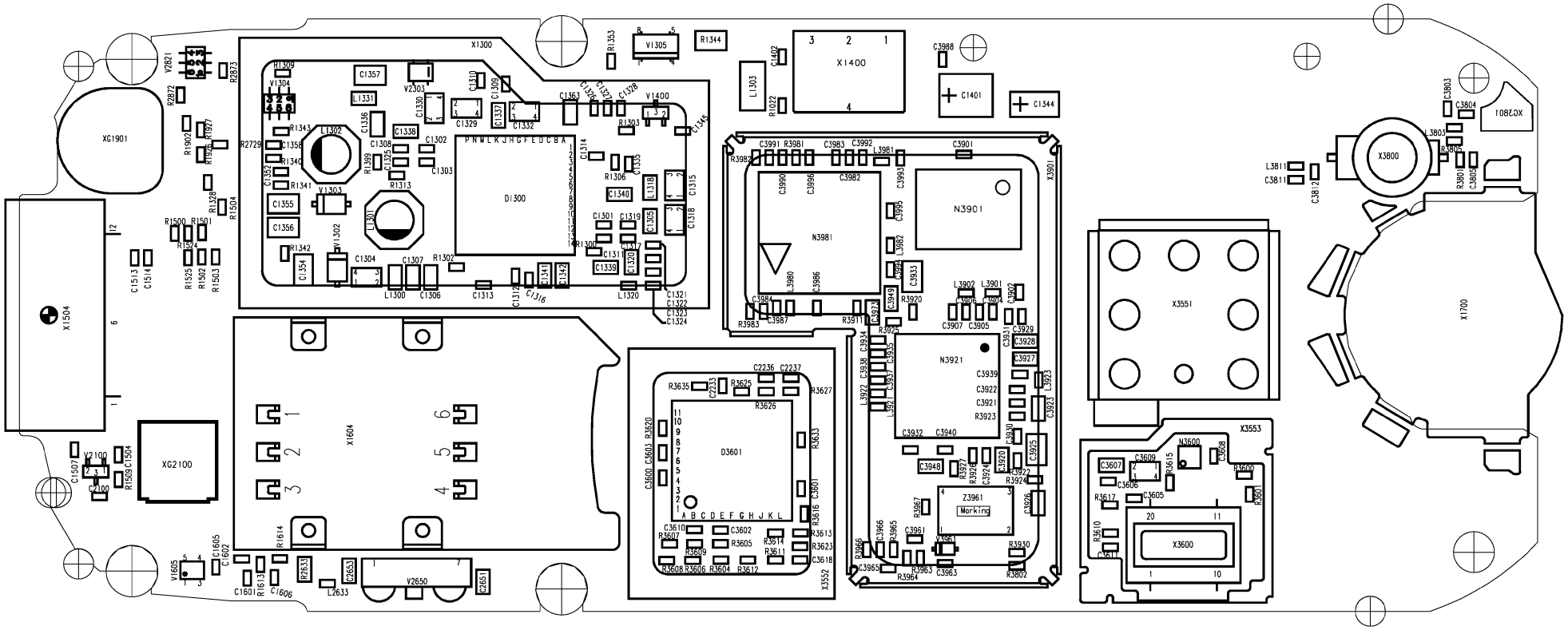

C1301	5B	C1328	5B	C1601	2D	C3901	7B	C3949	6C	L1331	3B	R1343	3B	R3608	5D	R3927	7C	X3552	5C
C1302	3B	C1329	4B	C1602	2D	C3902	7B	C3961	6C	L2633	3D	R1344	5A	R3609	5D	R3930	7D	X3553	7D
C1303	3B	C1330	3B	C1605	2D	C3904	7C	C3963	7D	L3803	10B	R1353	5A	R3610	8C	R3963	6D	X3600	8D
C1304	3B	C1332	4B	C1606	2D	C3905	7C	C3965	6D	L3811	9B	R1399	3B	R3611	6D	R3964	6D	X3800	9B
C1305	5B	C1335	5B	C2100	1C	C3906	7B	C3966	6D	L3901	7B	R1500	2B	R3612	5D	R3965	6D	X3901	7D
C1306	3B	C1336	3B	C2233	5C	C3907	7B	C3973	6B	L3902	7B	R1501	2B	R3613	6C	R3966	6D	Z3961	7C
C1307	3B	C1337	4B	C2236	5C	C3920	7C	C3982	6B	L3921	6C	R1502	2B	R3614	6C	R3967	6C		
C1308	3B	C1338	3B	C2237	6C	C3921	7C	C3983	6B	L3922	6C	R1503	2B	R3615	8C	R3981	6B		
C1309	4B	C1339	5B	C2651	4D	C3922	7C	C3984	5C	L3923	7C	R1504	2B	R3616	6C	R3982	5B		
C1310	4B	C1340	5B	C2653	3D	C3923	7C	C3986	6C	L3980	6B	R1509	1C	R3617	8C	R3983	5B		
C1311	4B	C1341	4B	C3600	5C	C3924	7C	C3987	6B	L3981	6B	R1524	2B	R3620	5C	V1302	3B		
C1312	4B	C1342	4B	C3601	6C	C3925	7C	C3988	7A	L3982	6B	R1525	2B	R3623	6D	V1303	3B		
C1313	4B	C1344	7B	C3602	5C	C3926	7C	C3990	6B	N3600	8C	R1613	2D	R3625	5C	V1304	3B		
C1314	4B	C1345	5B	C3603	5C	C3927	7C	C3991	6B	N3901	7B	R1614	2D	R3626	5C	V1305	5A		
C1315	5B	C1352	3B	C3605	8C	C3928	7C	C3992	6B	N3921	7C	R1902	2B	R3627	6C	V1400	5B		
C1316	4B	C1354	3B	C3606	8C	C3929	7C	C3993	6B	N3981	6B	R1926	2B	R3633	6C	V1605	2D		
C1317	5B	C1355	3B	C3607	8C	C3930	7C	C3994	6B	R1022	6B	R1927	2B	R3635	5C	V2100	1C		
C1318	5B	C1356	3B	C3608	8C	C3931	7C	C3995	6B	R1300	4B	R2633	3D	R3801	10B	V2303	3A		
C1319	5B	C1357	3B	C3609	8C	C3932	6C	C3996	6B	R1302	4B	R2729	2B	R3802	7D	V2650	4D		
C1320	5B	C1358	2B	C3610	5C	C3933	6B	D1300	4B	R1303	5B	R2872	2B	R3805	10B	V2821	2B		
C1321	5B	C1363	4B	C3611	8D	C3934	6C	D3601	5C	R1306	5B	R2873	2B	R3911	6B	V3961	7D		
C1322	5B	C1401	7B	C3618	6D	C3935	6C	L1300	3B	R1309	3B	R3600	8C	R3920	6C	X1300	5C		
C1323	5B	C1402	6A	C3803	10B	C3937	6C	L1301	3B	R1313	3B	R3601	8C	R3922	7C	X1400	6A		
C1324	5B	C1504	1C	C3804	10B	C3938	6C	L1302	3B	R1328	2B	R3604	5D	R3923	7C	X1504	1C		
C1325	3B	C1507	1C	C3805	10B	C3939	7C	L1303	5A	R1340	3B	R3605	5D	R3924	7C	X1604	2C		
C1326	4B	C1513	2B	C3811	9B	C3940	7C	L1318	5B	R1341	3B	R3606	5D	R3925	6C	X1700	10C		
C1327	5B	C1514	2B	C3812	9B	C3948	6C	L1320	5B	R1342	3B	R3607	5D	R3926	7C	X3551	8C		

Confidential
Copyright © Siemens AG

Achtung : Hoehenprofil C24___-___-___-___-42 (gilt nur fuer Entwicklung)
Liefervarianten siehe : V24851-Z2000-A1-*-35

VERS.	CHANGE NUMBER	DATE	NAME
8	11460	16.01.2004	Me
7	11184	22.12.2003	Nol

DATE	20.03.2003
NAME	Merk
APPR'D	
STD	
MP UC RD ED Ulm	

SIEMENS AG

R65-Ulysses V1
B2 Layout HIT
WIRING DIAGRAMM (SOLDER SIDE 2)

3:1

43213

SHEET 2+

(Created by BOM number: A5B00900121715-11460)

PROPRIETARY DATA, COMPANY CONFIDENTIAL
ALL RIGHTS RESERVED

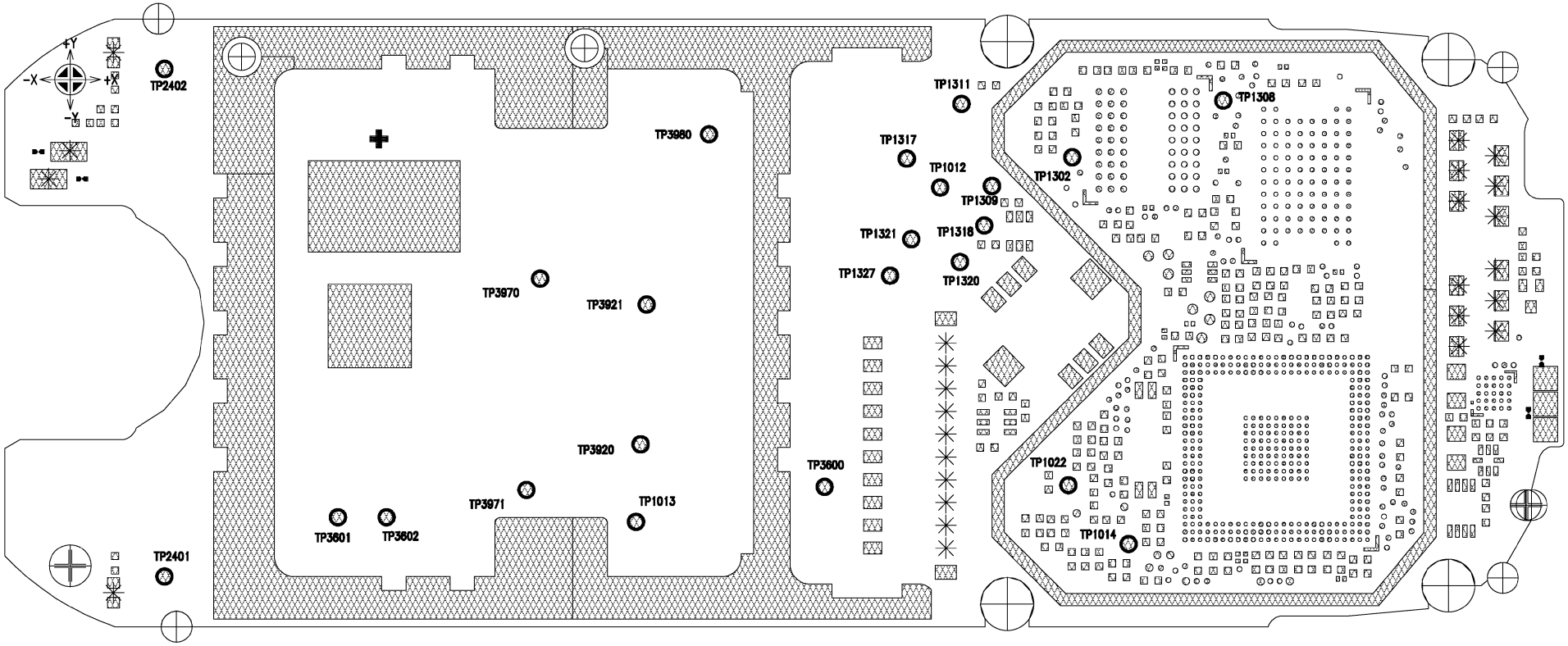

Confidential
Copyright © Siemens AG

				DATE	20.03.2003
				NAME	Merk
				APPR'D	
				STD	
				MP UC RD ED Ulm	
8	11460	16.01.2004	Me	SIEMENS AG	
7	11184	22.12.2003	Nol		
VERS.	CHANGE NUMBER	DATE	NAME	(Created by BOM number: A5B00900121715-11460)	

R65-Ulysses V1
B2 Layout HIT
TESTPOINT DIAGRAMM (SIDE 1)

3:1

43214

SHEET 1+

ALS BETRIEBSGEHEIMNIS ANVERTRAUT
ALLE RECHTE VORBEHALTEN

SAP-Ident: 43214 / BOM / 000 / 08 Created/Changed: NOLTE, 2004-01-12

PROPRIETARY DATA, COMPANY CONFIDENTIAL
ALL RIGHTS RESERVED

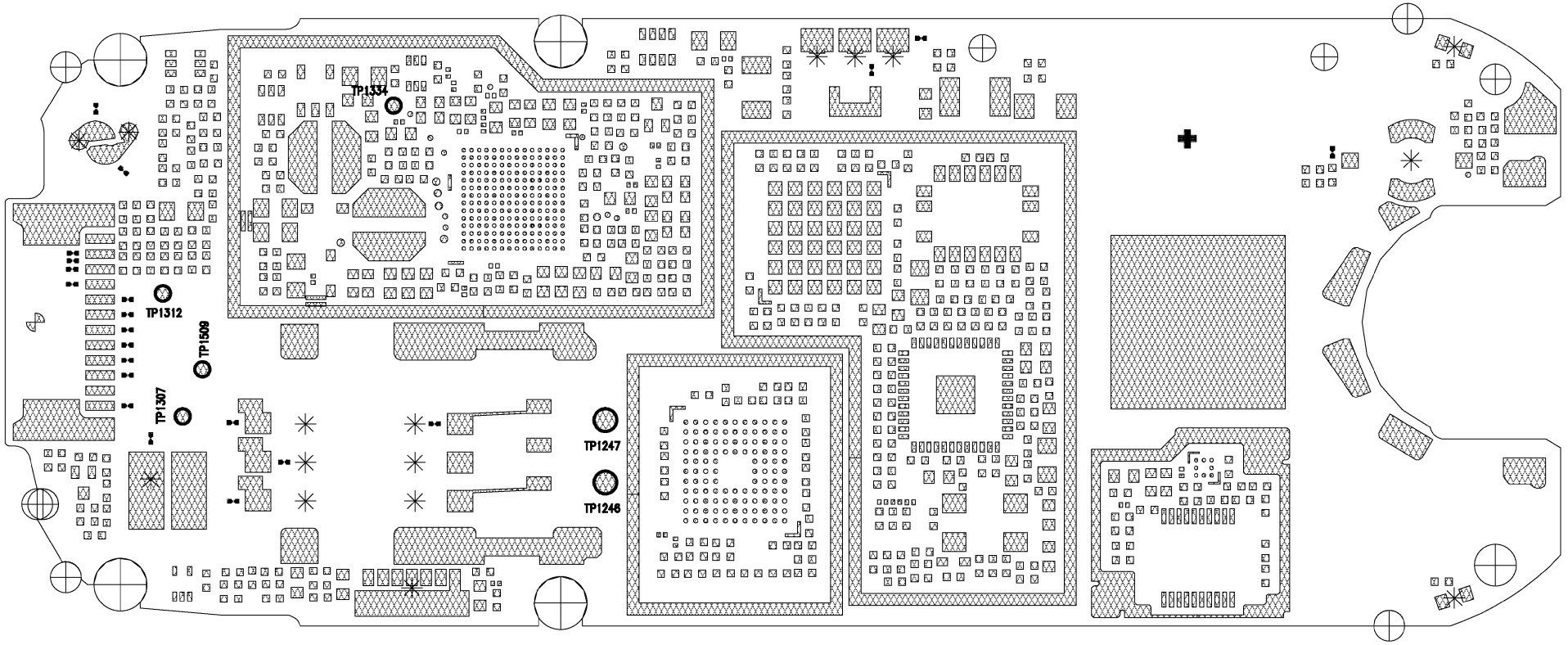

Confidential
Copyright © Siemens AG

				DATE	20.03.2003
				NAME	Merk
				APPR'D	
				STD	
				MP UC RD ED Ulm	
8	11460	16.01.2004	Me	SIEMENS AG	
7	11184	22.12.2003	Nol		
VERS.	CHANGE NUMBER	DATE	NAME	(Created by BOM number: A5B00900121715-11460)	

R65-Ulysses V1
B2 Layout HIT
TESTPOINT DIAGRAMM (SIDE 2)

3:1

43214

SHEET 2-

ALS BETRIEBSGEHEIMNIS ANVERTRAUT
ALLE RECHTE VORBEHALTEN

SAP-Ident: 43214 / BOM / 000 / 08 Created/Changed: NOLTE , 2004-01-12